Prototyping of a 25 Gbps optical transmitter for applications in high-energy physics experiments

HSTD12
ICC, Hiroshima, Japan
Dec. 14-18, 2019

C.-P. Chao[1], S.-W. Chen[1], D. Gong[2], S. Hou[3], X. Huang[2], C.-Y. Li[1], C. Liu[2], T. Liu[2], M. Qi[4], J. Ye[2], X. Zhao[2], L. Zhang[4], W. Zhou[2]

[1)]APAC Opto Electronics Inc., Taiwan; [2)] Southern Methodist Univ. Dallas, TX, U.S.A; [3)]Academia Sinica, Taipei, Taiwan; [4)] Nanjing Univ., Nanjing, China

Introduction: we present the MTx+ transmitter developed with the dual-channel LOCld65 laser driver and 850 nm VCSEL (vertical-cavity surface-emitting laser) for applications requiring tolerance in radiation fields with low-mass multi-mode fibers for a distance of a few hundred meters. The newly developed modules has achieved data transmission rate of 25 Gbps.

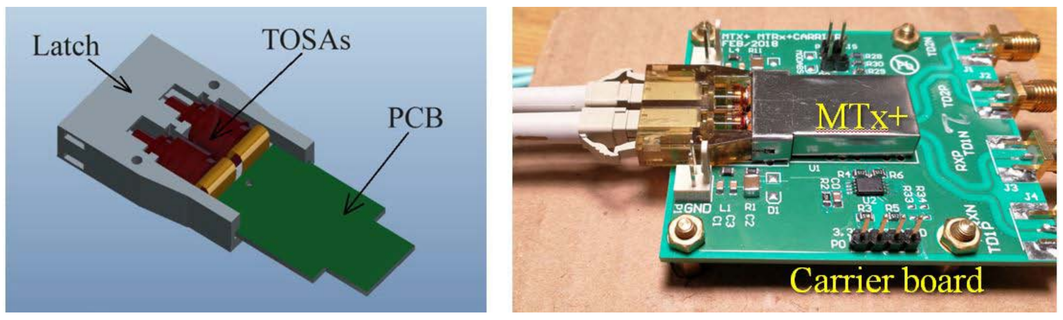

The design of the first MTx+ has a customized latch for LC fiber connector clicked in sideway to reduce height. A metal shield is applied for alignment and lockup. The electrical joint to the carrier board is a SFP+ type connector.

Opto-electronics: in continuation of developing the MTx transmitter for the ATLAS Phase-I [1], the new MTx+ module is designed in SFP+ format with a customized low-height latch for LC fiber connector insertion to the TOSA packaged VCSELs. The active implantation of the VCSEL is genuinely ~10 nm on GaAs wafer, which can endure radiation damage [2]. The key-component for development is the laser driver, LOCld65 [3], fabricated with the TSMC 65 nm technology.

The LOCld65 has two separate channels of the same circuits and a shared I²C control section. The design goal is for each channel to amplify a differential signal of greater than 100 mV, and an 8-mA modulation current to a VCSEL. It consists of a continuous-time equalizer (CTLE), four stages of limiting amplifiers (LAs), a high-current output driver, and a bias-current generator.

The former prototype MTx+ and test kits were made with PCB of FR-4 material, and the performance reached 14 Gbps, as is reported in [4].

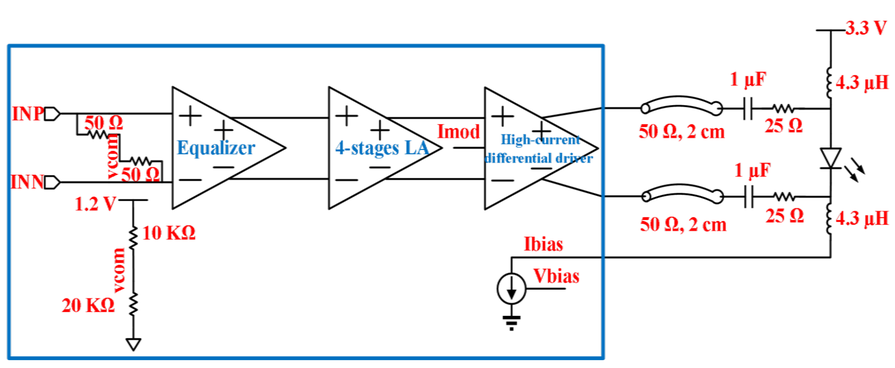

Block diagram of a LOCld65 channel is illustrated. It has a continuous-time equalizer (CTLE), four stages of limiting amplifiers (LAs), a high-current output driver, and a bias-current generator. The layout of the chip and packaging are shown below.

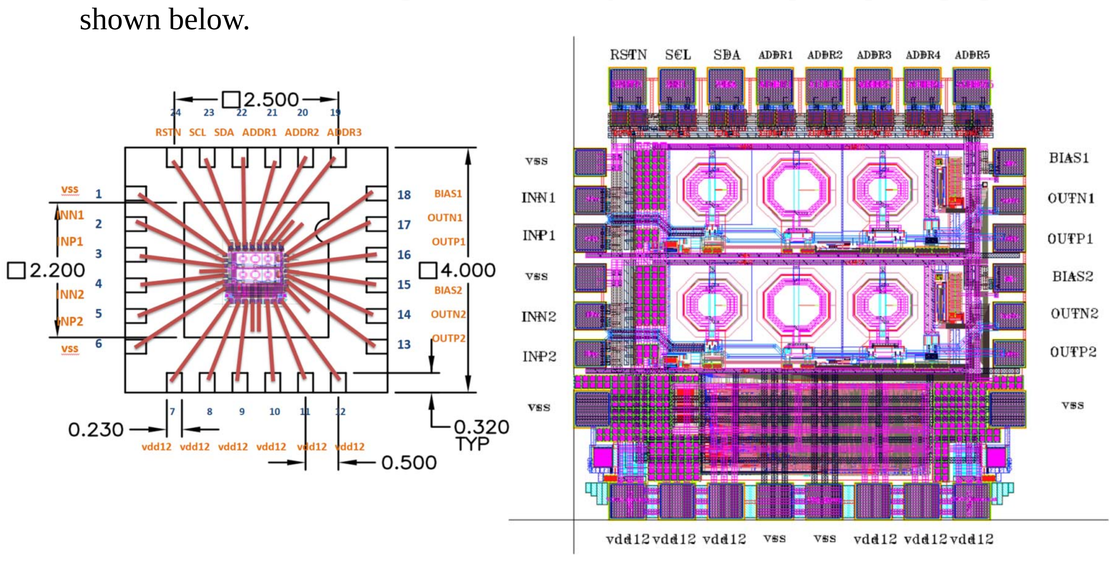

[1] *"Mid-board miniature dual channel optical transmitter MTx and transceiver MTRx"*, X. Zhao et al., JINST 11 (2016) C03054
[2] *"Radiation hardness of optoelectronic components for the optical readout of the ATLAS inner detector"*, S. Hou et al., Nucl. Instr. And Meth. A 636 (2011) S137.
[3] *"LOCld65, A Dual-Channel VCSEL Driver ASIC For Detector Front-End Readout"*, W. Zhou et al., IEEE Trans Nucl. Sci., 66 (2019) 1115.
[4] *"A TOSA/ROSA-based optical transmitter (MTx+)/transceiver (MTRx+) for high-energy physics experiments"* B. Deng et al., JINST 14 (2019) C05021.

Revision for higher bandwidth: the transmitter port of the MTx+ has accomplished the design goal, and is investigate for higher bandwidth performance. The revision aims for 25 Gbps transmission, with the PCB made of Panasonic Megatron-6. The trace routing, cables and connectors are upgraded to 25 GHz rated specification. The TOSAs are from the SAN-U Optronics assembled with a Avago VCSEL.

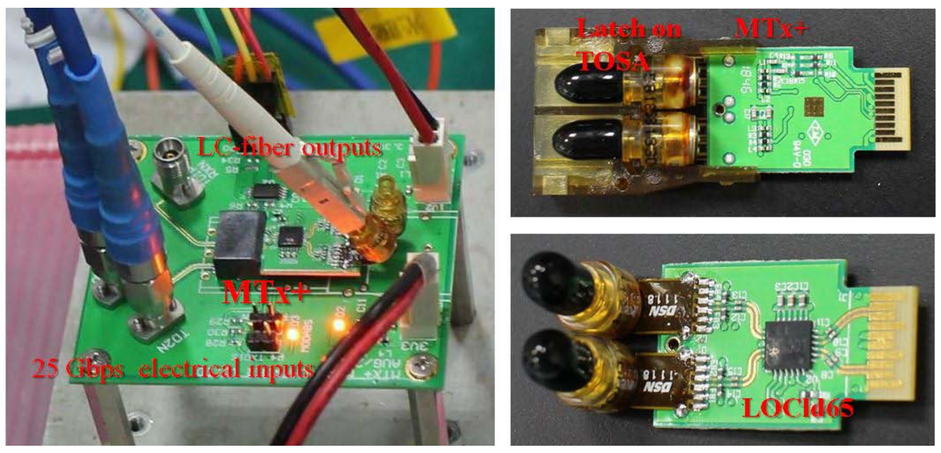

The revised MTx+ and the test carrier board with PCB made of Megatron-6. The electrical input components, (SMA cable and connectors) are 25 Gbps rated.

The MTx+ bandwidth is investigated with the electrical input waveforms generated by a Anritsu MP1800A, and the eye-diagrams measured by a Keysight DCA-X 86100D. The bandwidths are tested from 10 Gbps, in steps up to 25 Gbps. The I²C control parameters are optimized for equalizer, bias and modulation to the TOSAs. The mask of 25 Gbps on the eye-diagram, as is illustrated below, has a margin of 22 %.

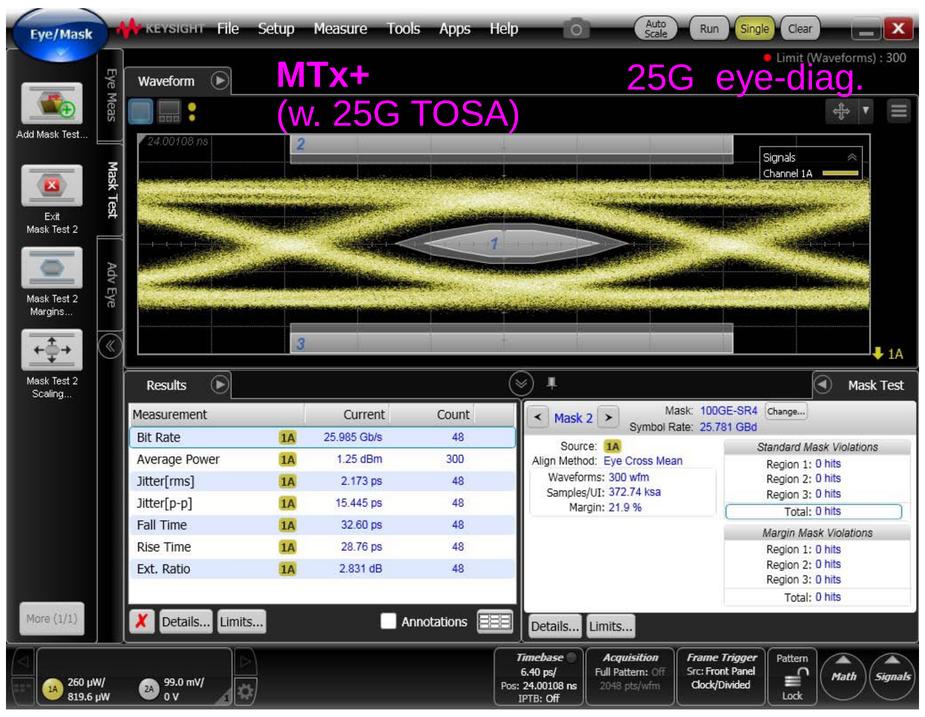

The 25 Gbps eye-diagram of a MTx+ channel. The mask has a margin of 22%.

To differentiate the bandwidth limit due to the LOCld65 or the TOSAs, the MTx+ is also assembled with Truelight 10 Gbps TOSAs. The bandwidth has reached 20 Gbps. The eye-diagram compared to the disqualified 25 Gbps plot is illustrated below.

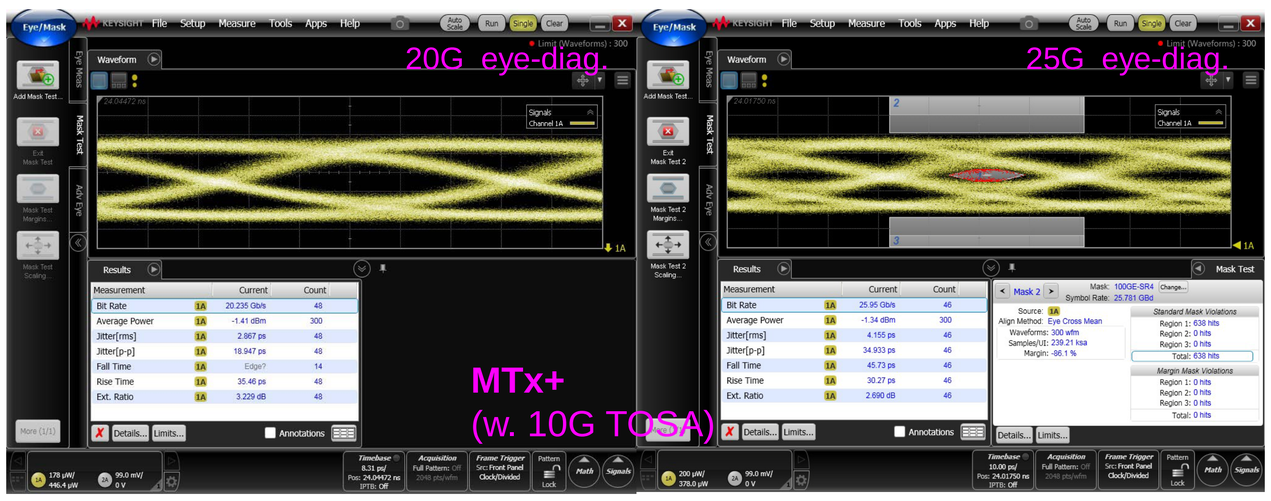

The eye-diagrams are of a MTx+ of Megatron-6 assembled with a Truelight TOSA specified for 10 Gbps. The 20 Gbps (left) can pass BER test. The 25 Gbps (right) with mask is shown for comparison.

Summary: the newly developed MTx+ with Megatron-6 and TOSAs of different grades is investigated for bandwidth. The data transmission rate has reached 25 Gbps. With a lower graded TOSA (TL 10 Gbps), the band-width can reach 20 Gbps