ETH zürich

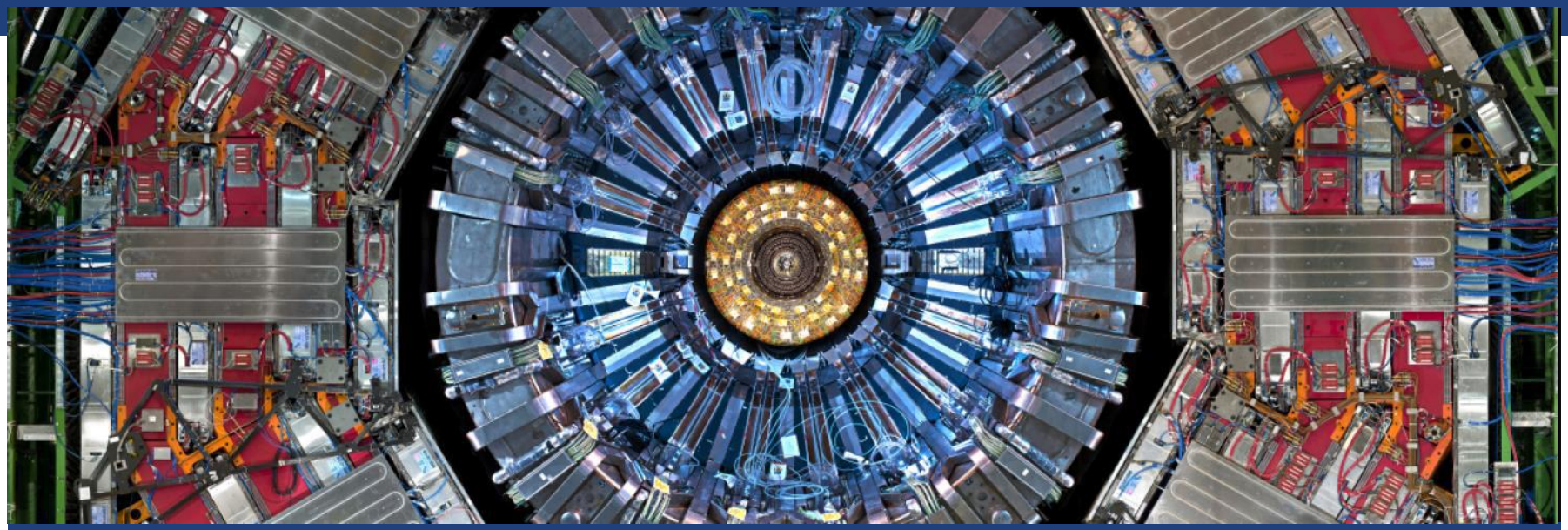

Serial powering for the Phase 2 upgrade of the CMS pixel detector

Vasilije Perovic *on behalf of* the CMS Collaboration

LHC plan and CMS upgrade

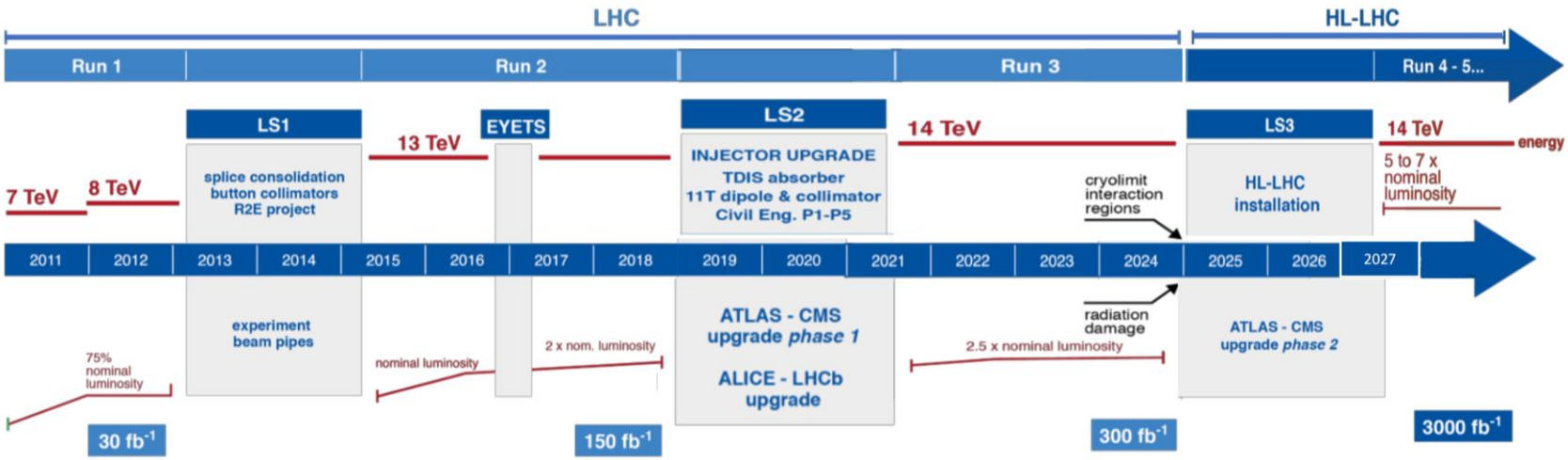

- Instantaneous luminosity (design) to increase 7.5x
- **A number of technical novelties are needed**
  (Talk by S. Orfanelli on CMS Inner Tracker upgrade)

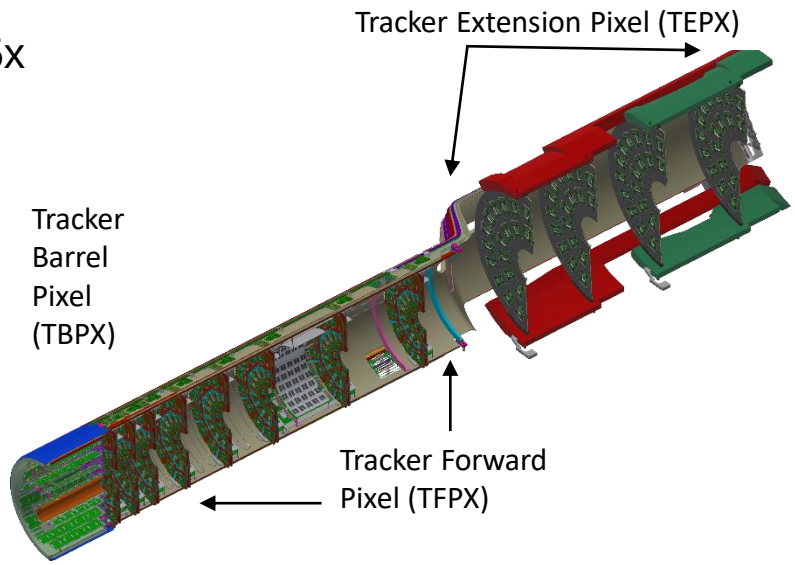

Some of the challenges for the Phase 2 Inner Tracker

- High luminosity → **Radiation-hard design**
- Increased latency and hit rate → **High supply current (~2 A /chip, ~30 kA total)**
  - Smaller feature size (65nm CMOS)
  - Increased granularity
- Good tracking performance → **Low mass design**

} **Serial Powering**

Serial powering has never been attempted before in a HEP experiment.

JINST 12 (2017) no.03, P03004
Nucl.Instrum.Meth. A557 (2006) 445-459
Nucl.Instrum.Meth. A511 (2003) 174-179

Serial powering

Parallel powering (current detector)

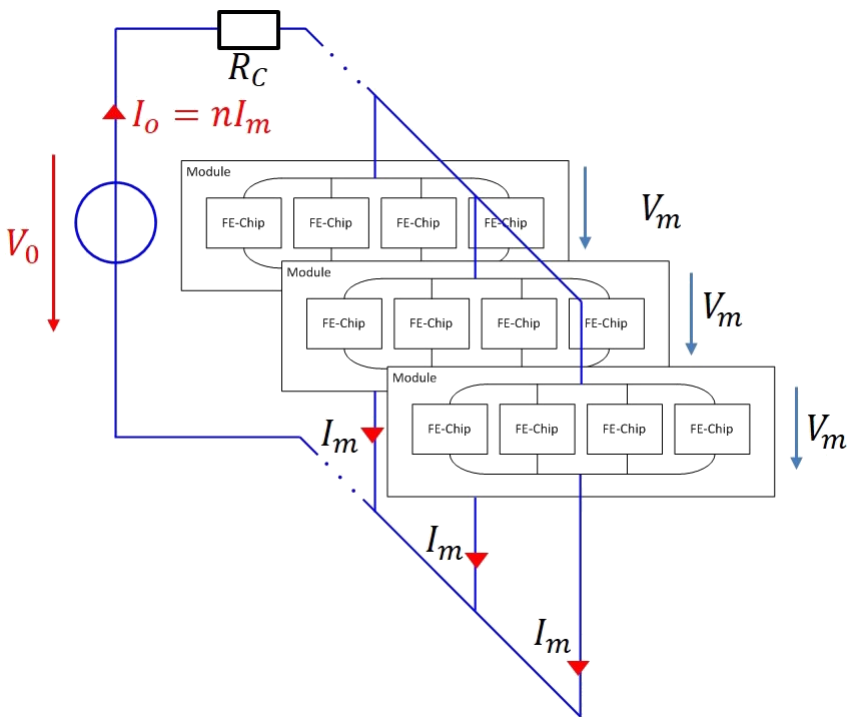

Power loss in parallel powering ~ $n^2 I_m^2 R_C$

Serial powering (Phase 2 detector)

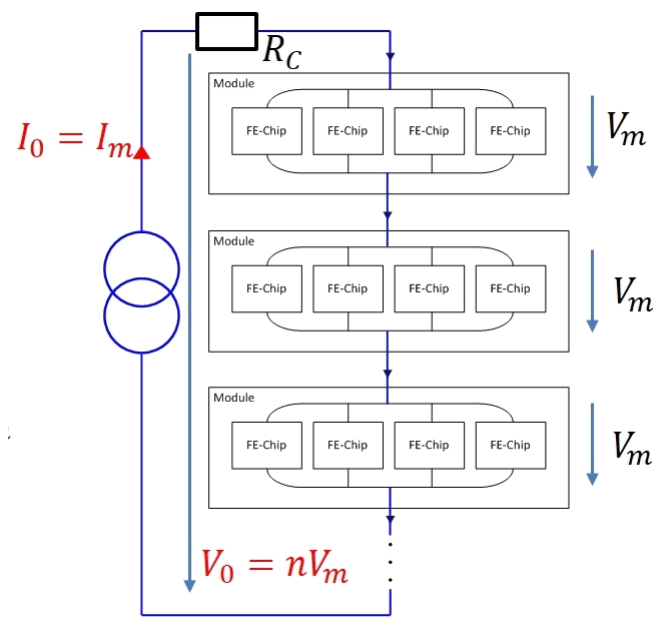

Power loss in serial powering ~ $I_m^2 R_C$

Serial powering

- Constant input current
- Different local grounds
  → on-chip reference needed

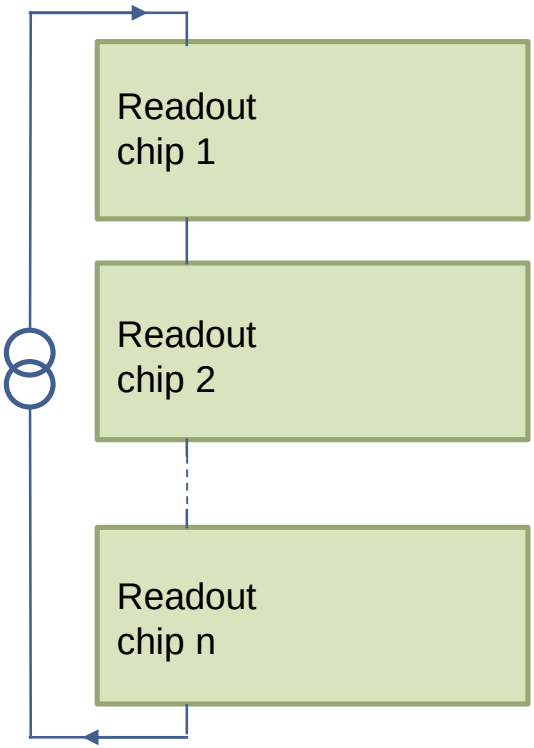

Serial powering

- Constant input current
- Different local grounds
  → on-chip reference needed

- High Voltage distributed in parallel
  - Planar sensors (*talk by G.Steinbrueck*) can work with this
  - 3D sensors (*talk by M.Meschini*) require higher HV granularity

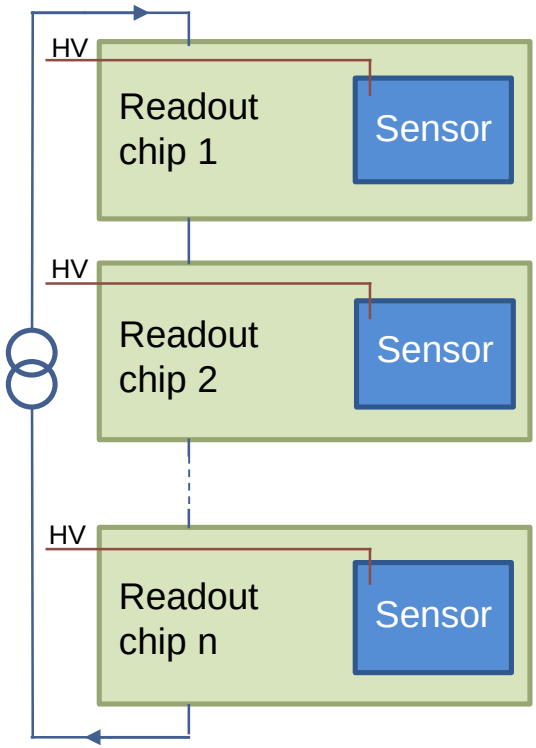

Serial powering

Possible forward bias with HV off (can be avoided)

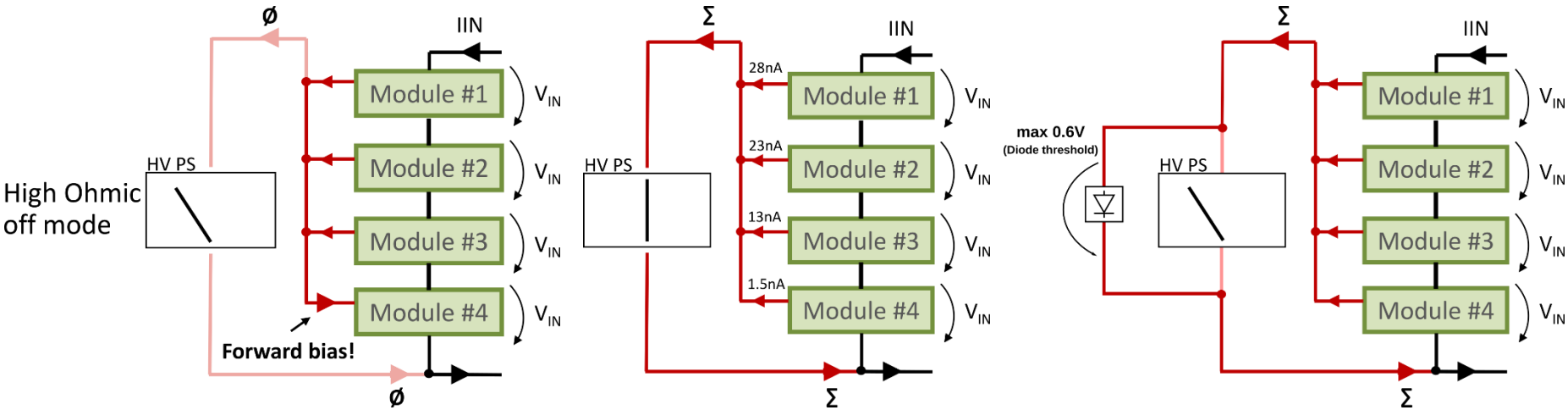

Serial powering

- Constant input current
- Different local grounds
  → on-chip reference needed
- High Voltage distributed in parallel
  - Planar sensors (*talk by G.Steinbrueck*) can work with this
  - 3D sensors (*talk by M.Meschini*) require higher HV granularity
- Possible forward bias with HV off (can be avoided)

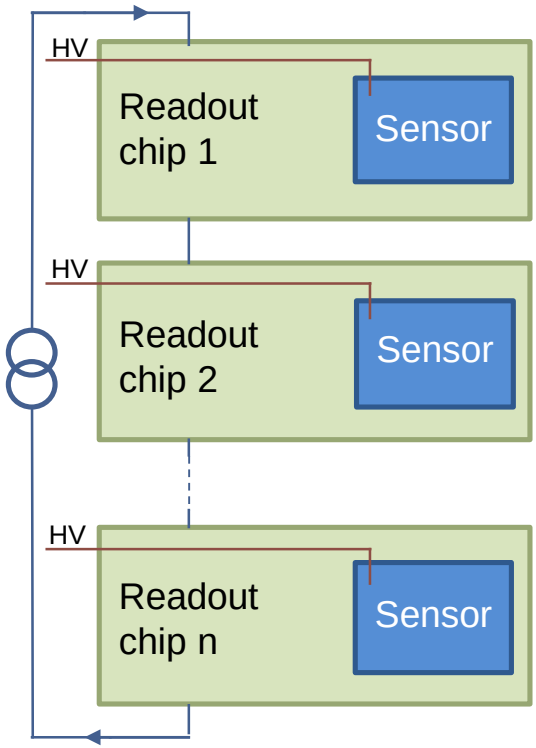

Serial powering

- Constant input current
- Different local grounds
  → on-chip reference needed
- High Voltage distributed in parallel
  - Planar sensors (*talk by G.Steinbrueck*) can work with this
  - 3D sensors (*talk by M.Meschini*) require higher HV granularity
- Possible forward bias with HV off (can be avoided)
- Single failure can compromise the chain

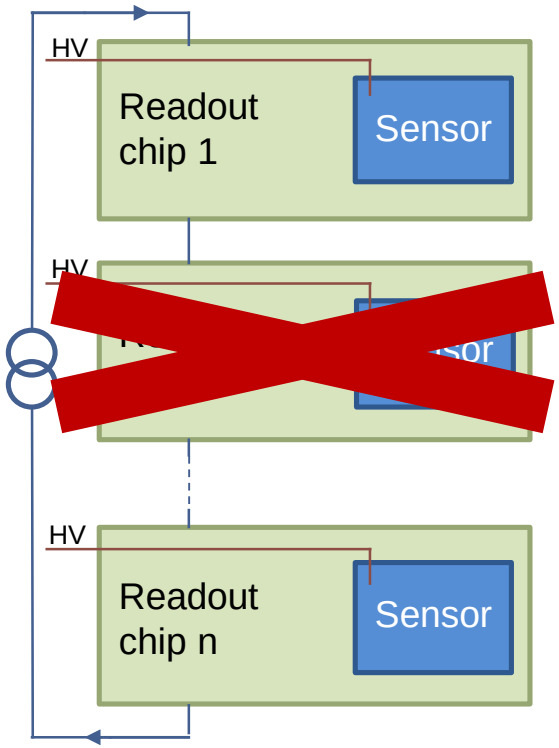

Serial powering

- Constant input current
- Different local grounds
  → on-chip reference needed
- High Voltage distributed in parallel
  - Planar sensors (*talk by G.Steinbrueck*) can work with this
  - 3D sensors (*talk by M.Meschini*) require higher HV granularity
- Possible forward bias with HV off (can be avoided)
- Single failure can compromise the chain
  → Modules with parallel-powered chips

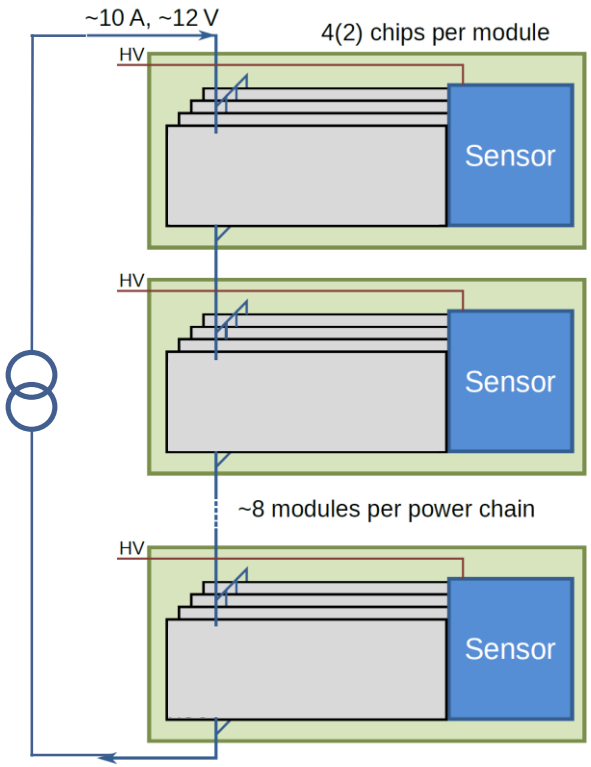

Serial powering

- Constant input current
- Different local grounds
  → on-chip reference needed
- High Voltage distributed in parallel
  - Planar sensors (*talk by G.Steinbrueck*) can work with this
  - 3D sensors (*talk by M.Meschini*) require higher HV granularity
- Possible forward bias with HV off (can be avoided)
- Single failure can compromise the chain
  → Modules with parallel-powered chips

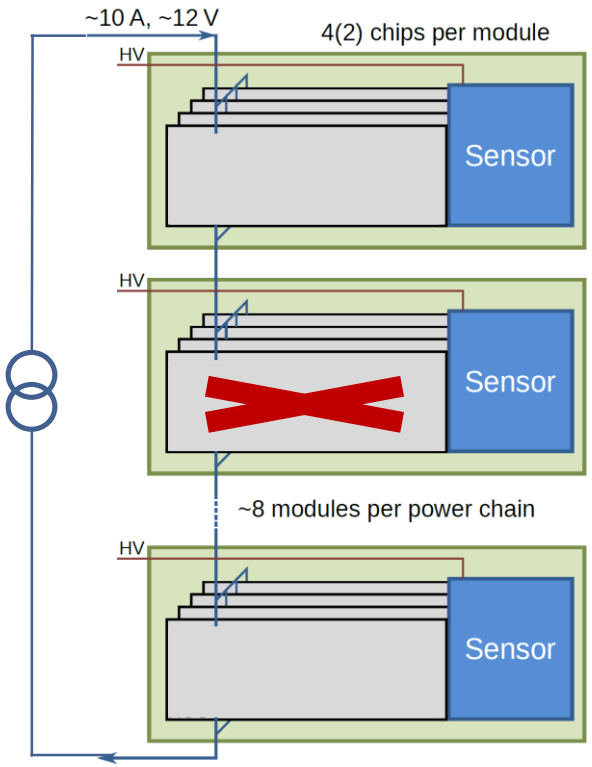

Serial powering

- **Constant input current**
- Different local grounds
  → **on-chip reference** needed
- High Voltage distributed in parallel
  - Planar sensors (*talk by G.Steinbrueck*) can work with this
  - 3D sensors (*talk by M.Meschini*) require higher HV granularity
- Possible forward bias with HV off (can be avoided)
- Single failure can compromise the chain
  → Modules with parallel-powered chips
- **Ohmic load to the supply**

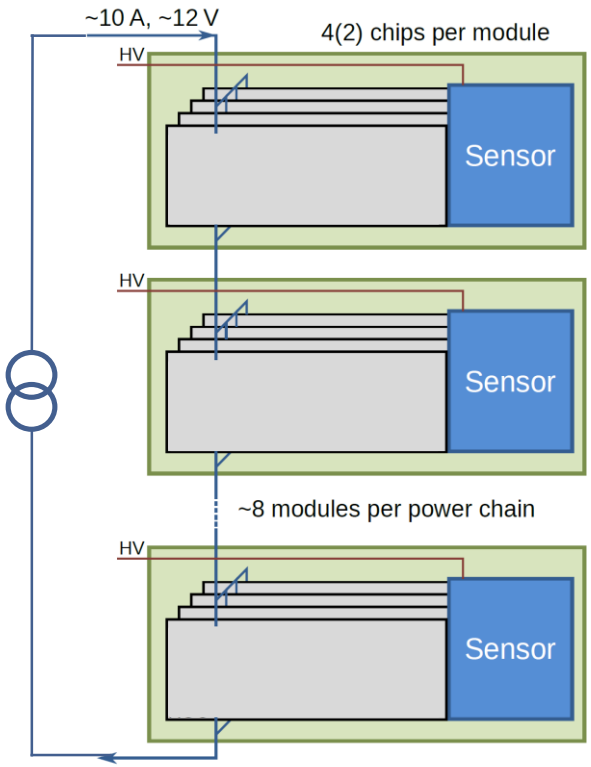

Serial powering – Shunt LDO regulator

- Constant voltage from the constant supply current
- Shunt + Low Dropout Regulator → ohmic behaviour is seen by the power supply

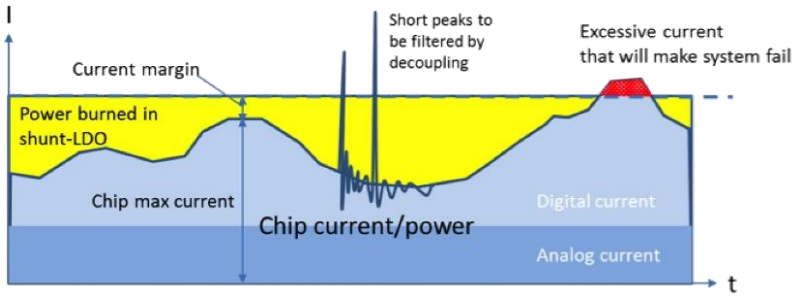

Serial powering – Shunt LDO regulator

- Constant voltage from the constant supply current
- Shunt + Low Dropout Regulator → ohmic behaviour is seen by the power supply

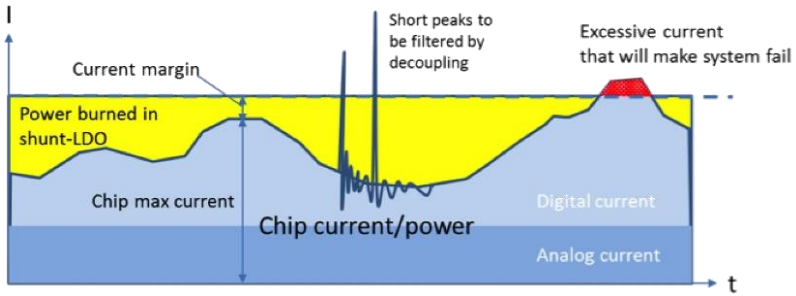

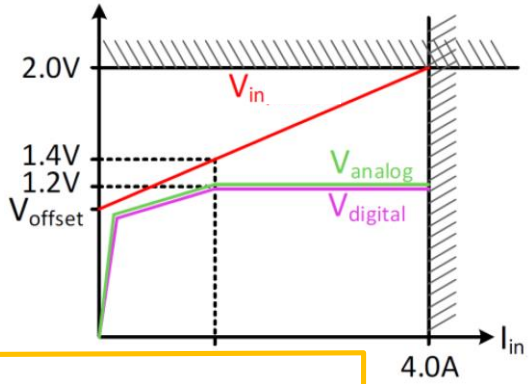

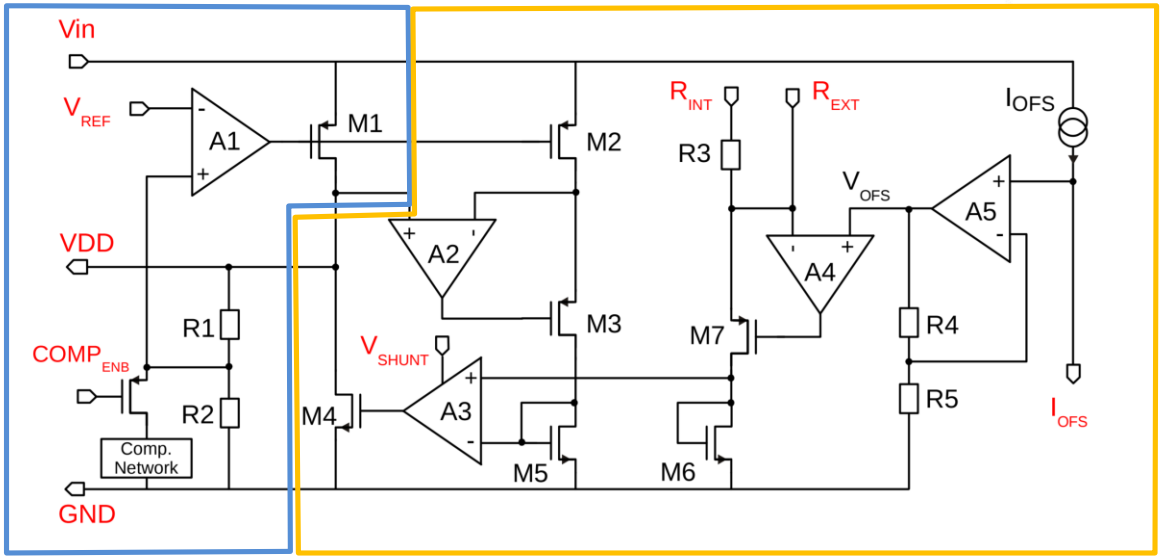

Serial powering

- Modules → **serial powering**
- Chips on modules → **parallel powering**
- HV distribution → **parallel** and referenced to the local grounds in the **serial** chain
- Communication is **AC coupled** to **parallel-powered** readout electronics with **DC-DC converters**.

- *We will essentially use a <u>mixed powering scheme</u>*

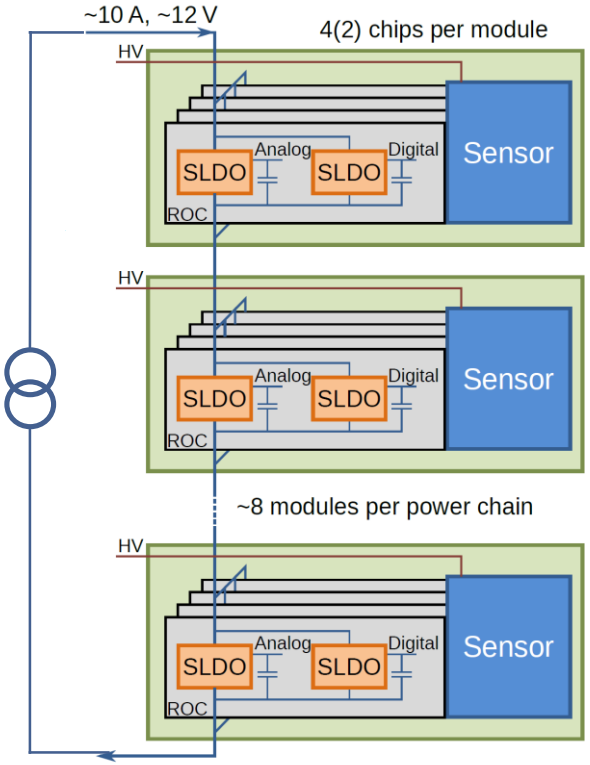

Prototype test chip – RD53A

- Joint ATLAS and CMS effort
- About ½ size of the final chip (~1 A current)
- 65 nm CMOS technology

- Three powering modes:
  - Shunt LDO
  - LDO (no shunt)
  - Direct

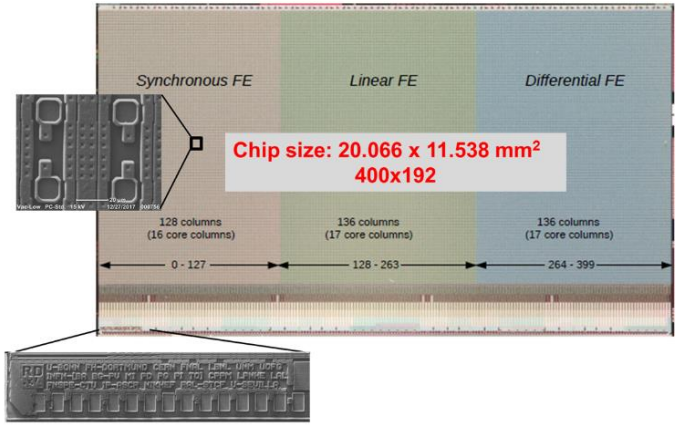

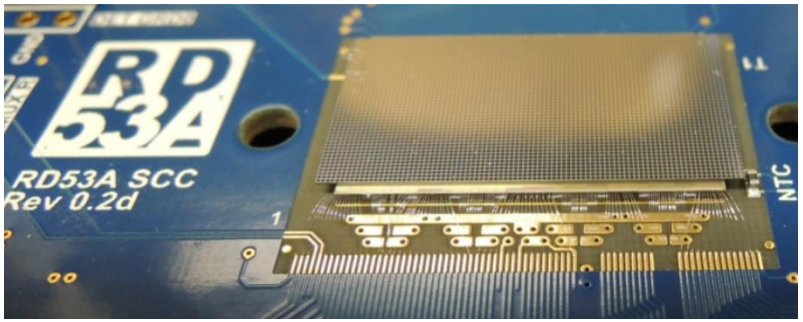

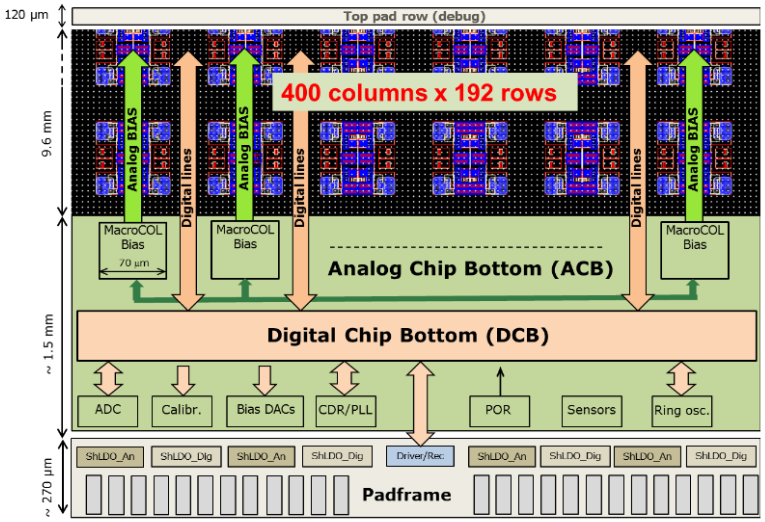

Serial Powering – RD53A SLDO regulator

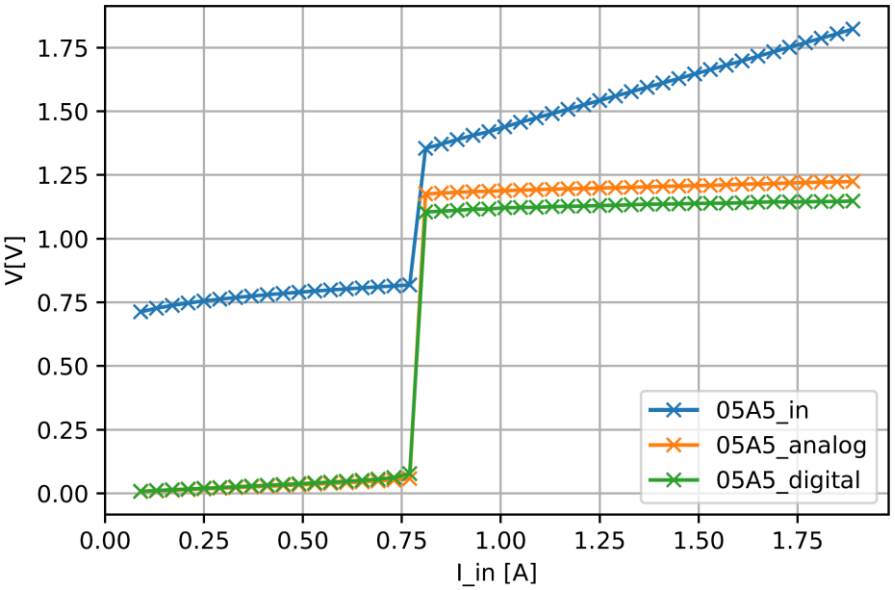

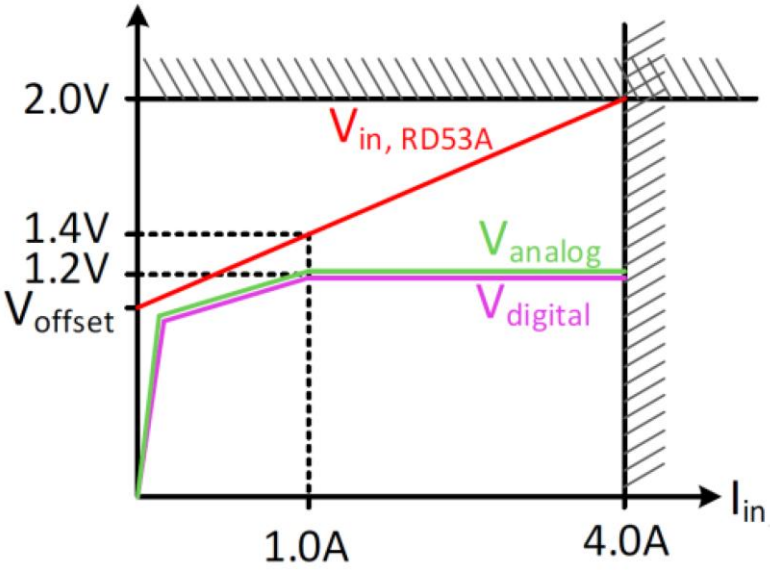

Serial Powering – RD53A SLDO regulator

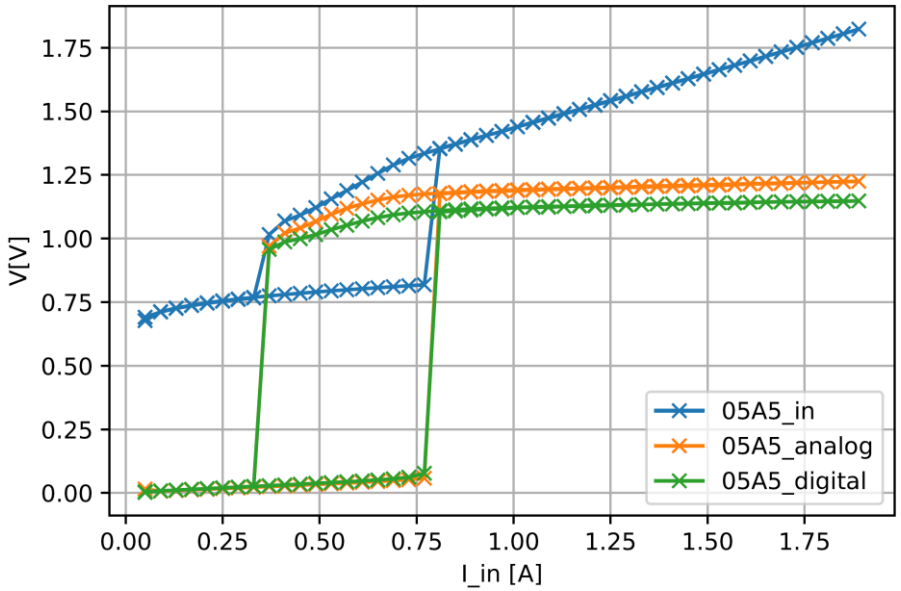

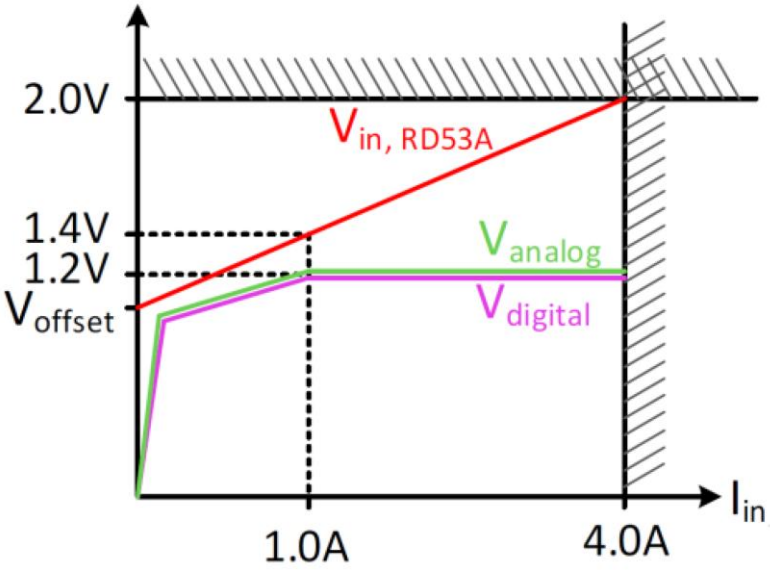

RD53A SLDO operation

Individual operation

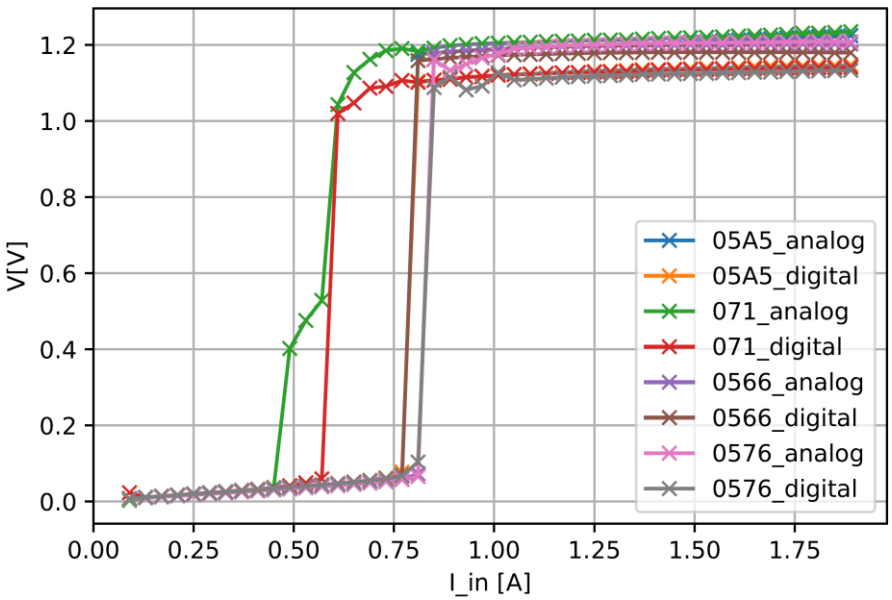

Parallel operation

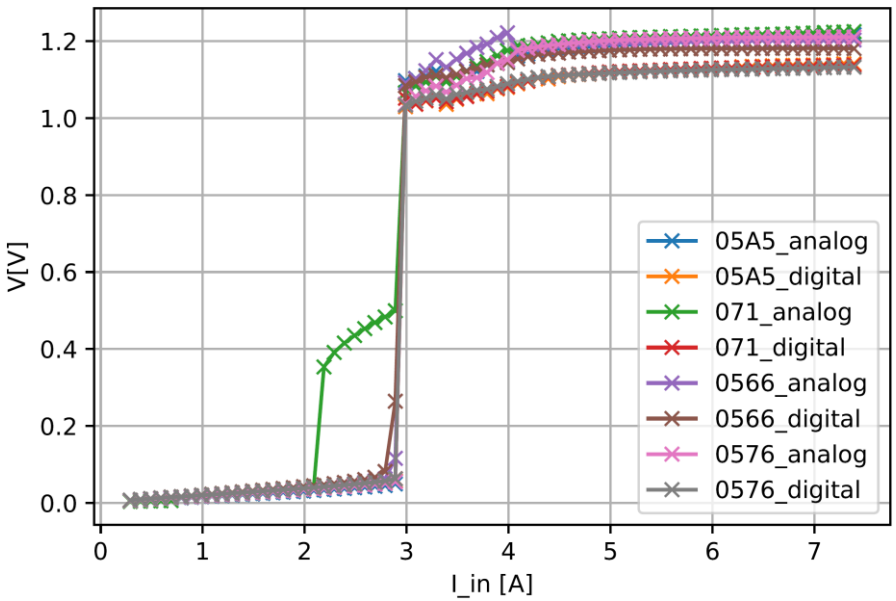

RD53A SLDO operation

Individual operation

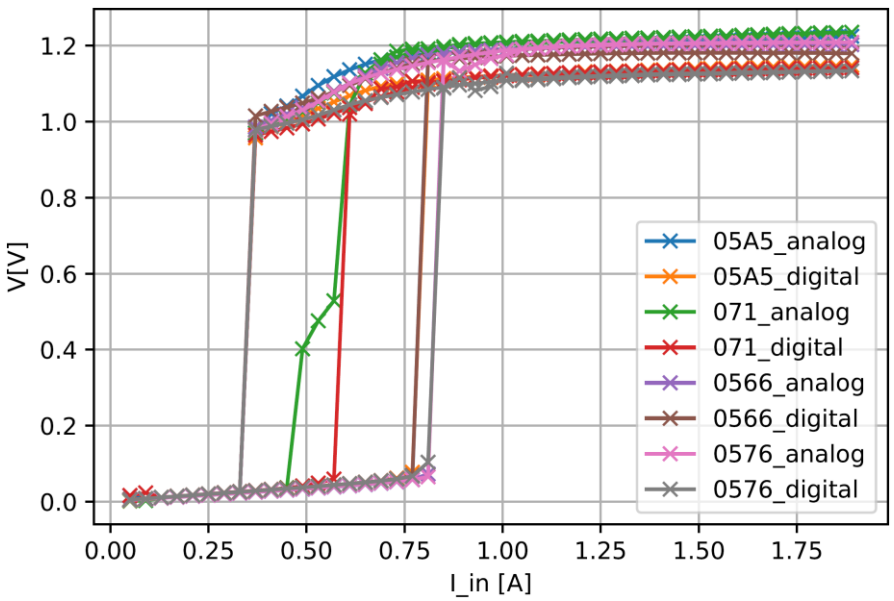

Parallel operation

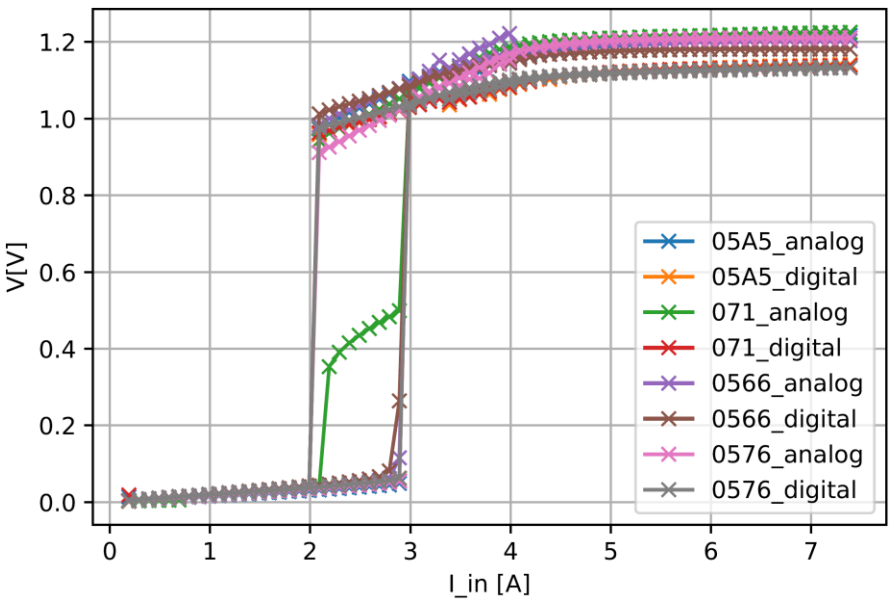

RD53A SLDO operation

- Can fail if input is ramped → fixed in RD53B (next version)

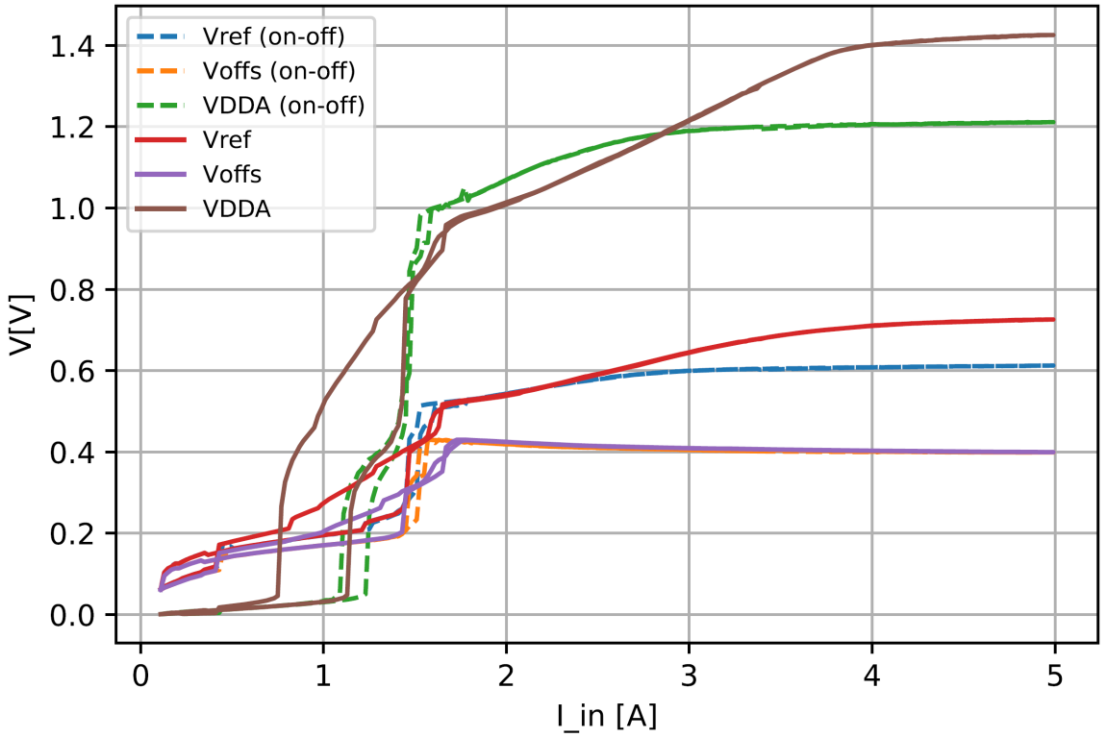

RD53A prototype modules

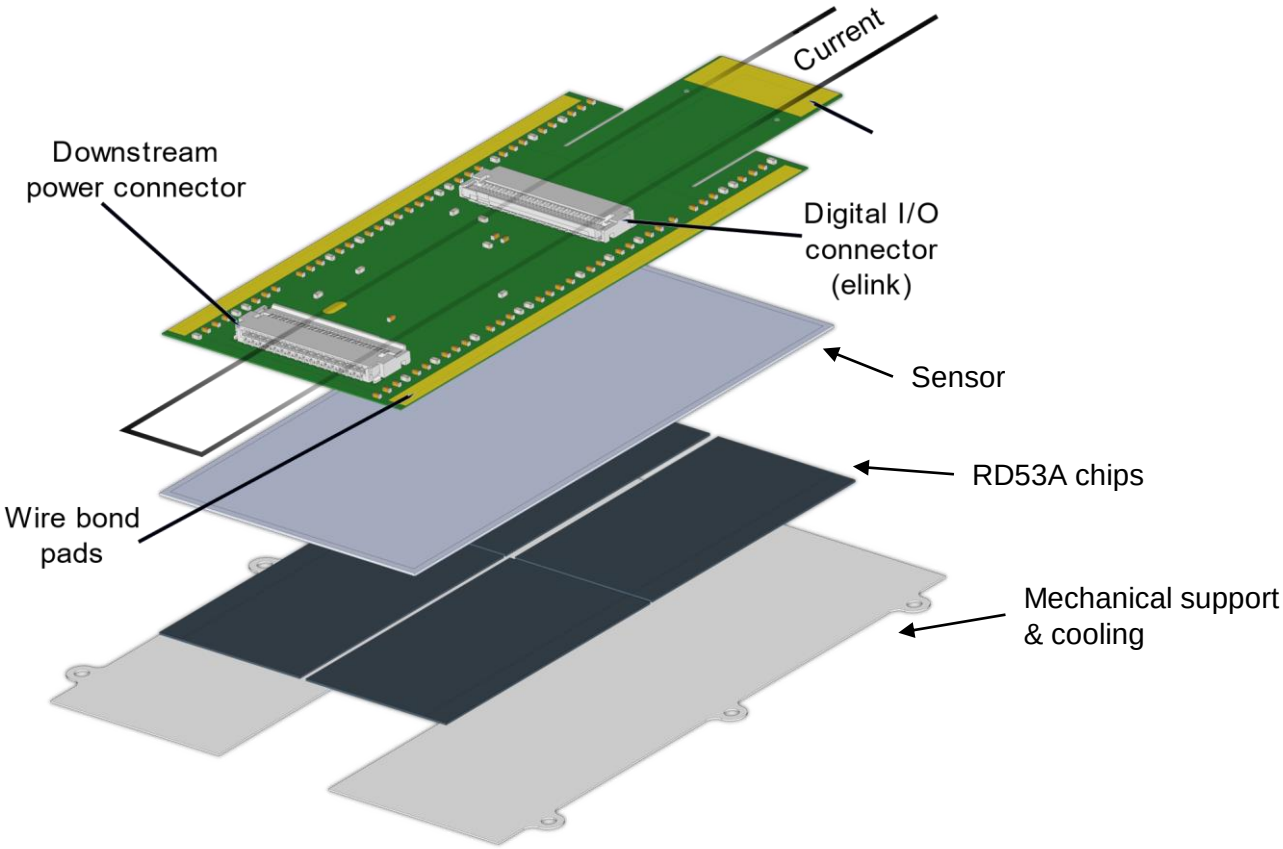

RD53A module SLDO operation

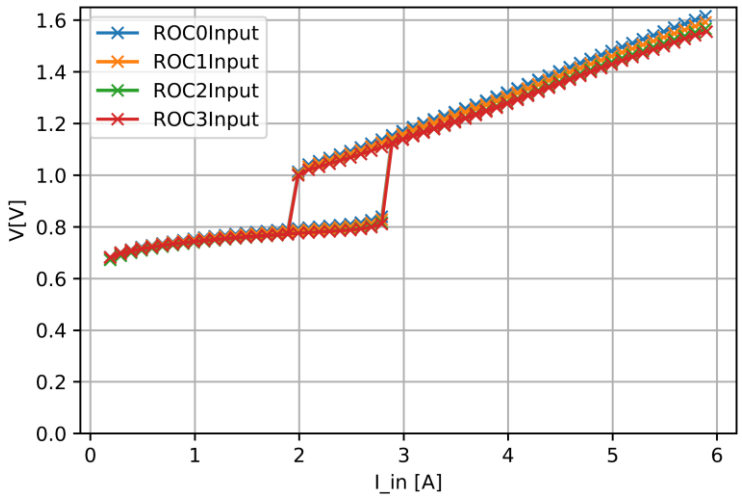

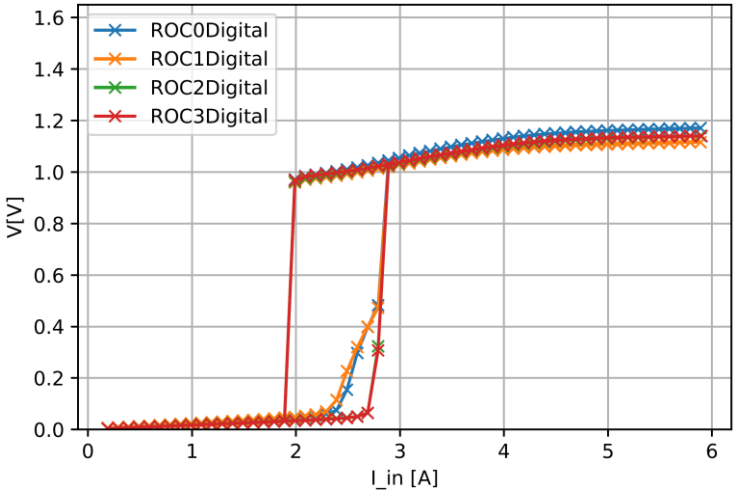

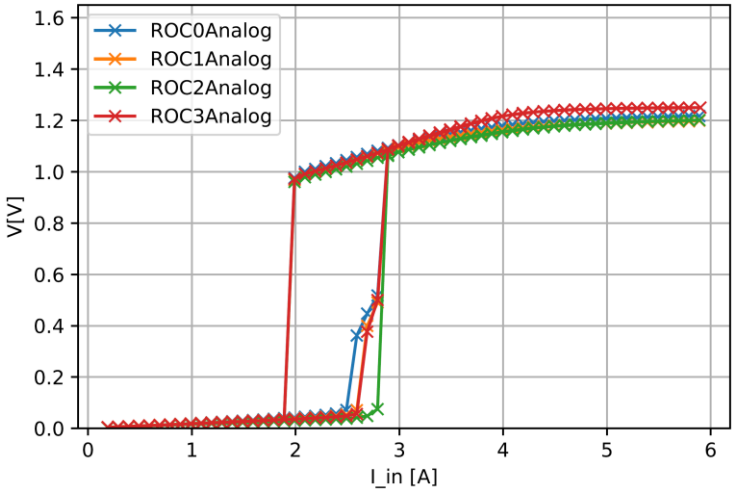

Serially powered RD53A modules

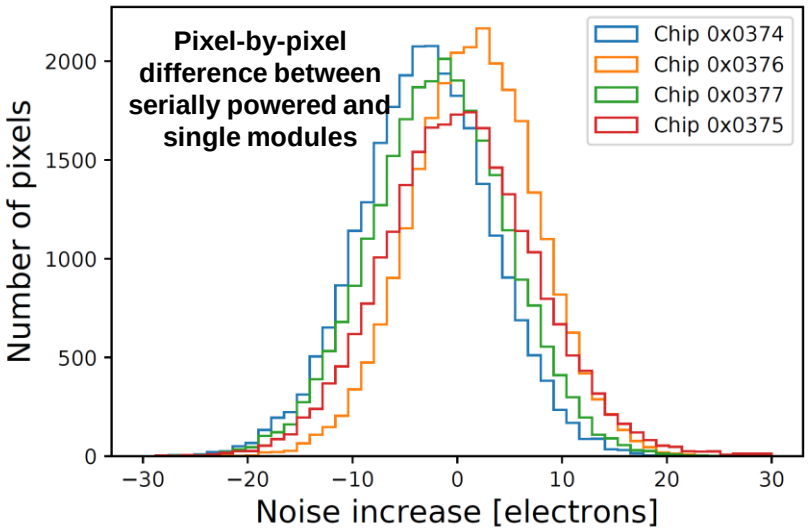

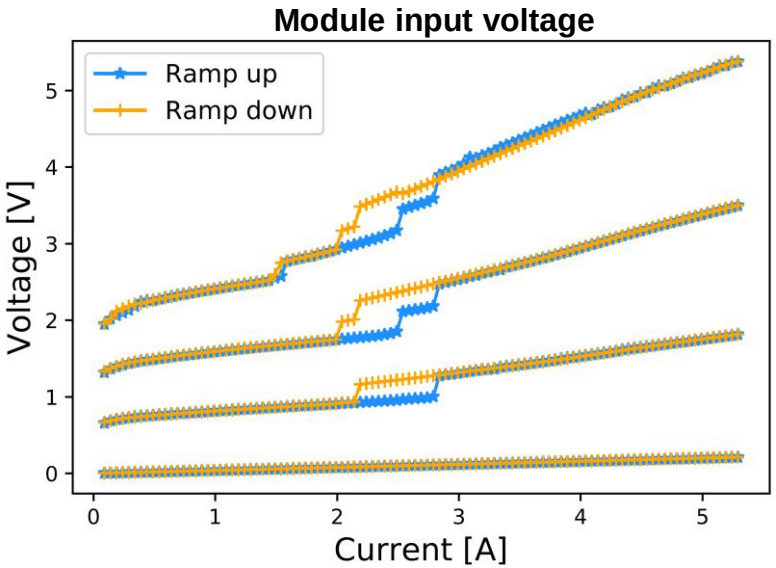

Summary

- High-Luminosity LHC will run at a luminosity increased by a factor of 7.5 compared to the current one
- CMS detector will undergo an upgrade to be able to cope with this increase
- Serial powering is one of the required novelties to meet these requirements

- RD53A prototype readout chip has been developed (joint ATLAS and CMS)
- Serially powered quad modules have been built
  - Serial powering is robust w.r.t. noise
  - Parallel powering on each module is beneficial for startup
  - Hysteresis is beneficial in preventing unwanted oscillations

- A chain of prototype modules has been operated and serial powering scheme successfully deployed.

- A lot of work ahead!

BACKUP