INSTRUMENTATION
TECHNOLOGIES

LIBERA

Digital LLRF system:

Concepts and requirements for proton therapy based on linear accelerator

Borut Baričević

WWW.I-TECH.SI

ICMAPT Seville, September 2019

Presentation outline

- Brief cancer therapy introduction
- Linear accelerators advantages
- Basic LLRF system principles
- LLRF implementation overview
- Proton therapy LLRF critical aspects
- Status of the AVO-ADAM project

Radiation therapy

Cancer treatment through ionizing radiation is acting on cancer cells DNA.

Radiation therapy methods:

- Electrons:

Limited effects on surface

- Photons (x-rays):

Spread among different depths

- Protons (or heavy ions, e.g. carbon)
  - Very focused with depth (Bragg peak)
  - Penetrate deeply (depth depends on beam energy)

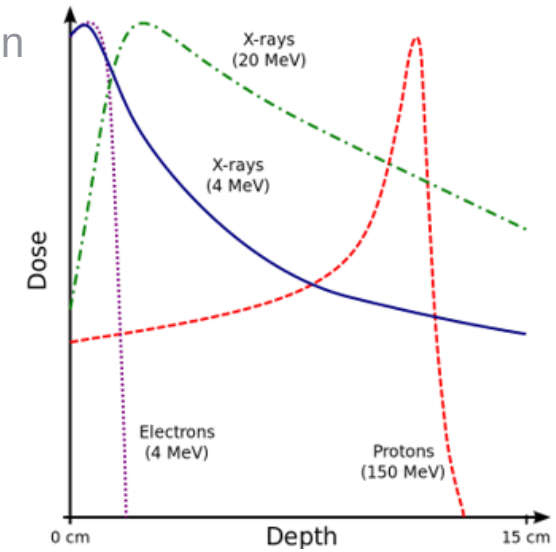

Proton therapy advantages

High energy protons are applied to tumor tissue. Proton energy is increased through particle accelerators.

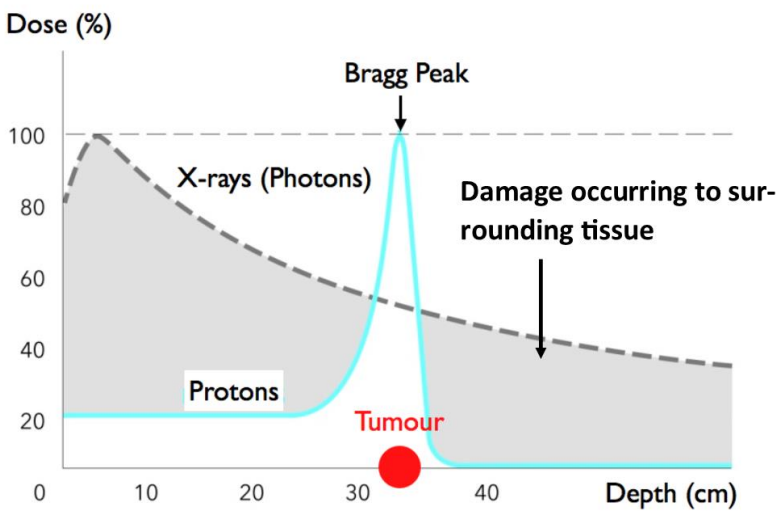

Proton therapy advantages:

- Radiation dose selectively deposited at beam energy dependent depth (70 MeV to 250 MeV)
- Beam transversally more focused, less scattering (protons are heavy)
- Protons reach tumors deeply in the body
- Minimized side-effects on surrounding tissue

Proton accelerators

Protons are accelerated by applying electro-magnetic field within RF cavities or dees.

- **Circular machines**: cyclotrons and synchrotrons
  - beam energy is increased over many cycles and require accelerating RF frequency and deflecting magnetic field to be corrected accordingly. Cyclotron extract at full energy; degrader are used to reduce it. (radiation issues)
  - RF frequency ramping process may have implication on cavity tuning and transverse beam position control
- **Linear machines**: LINACs
  - More flexible in controlling beam energy and less complex to control
  - Dynamic control of beam energy (tracking patient movement)
  - More efficient as protons are accelerated to the required energy

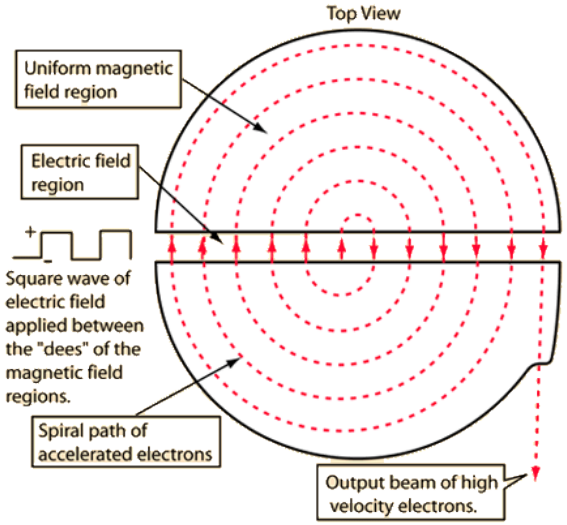

Cyclotron

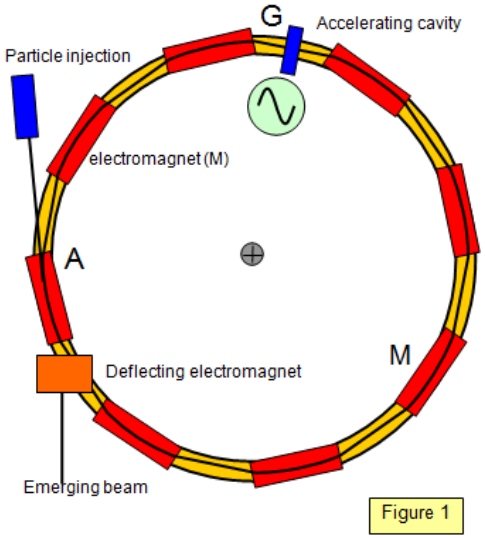

Synchrotron

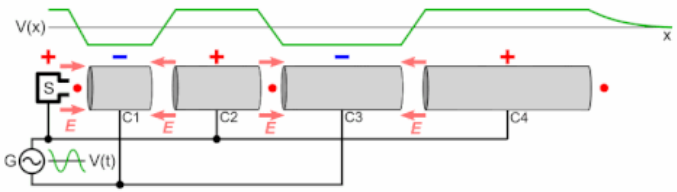

LINAC

Circular vs. Linear

- **Circular machines**:
  - Less flexibility in beam energy control
  - Large machines with demanding shielding requirements
  - Expensive*
- **Linear machines: (AVO-ADAM LIGHT)**
  - Precise 3D treatment dose control
  - Compact solutions to be installed in preexisting buildings, less shielding required
  - Cheaper than circular*

AVO-ADAM LIGHT, Harley Street, London (installation plan)

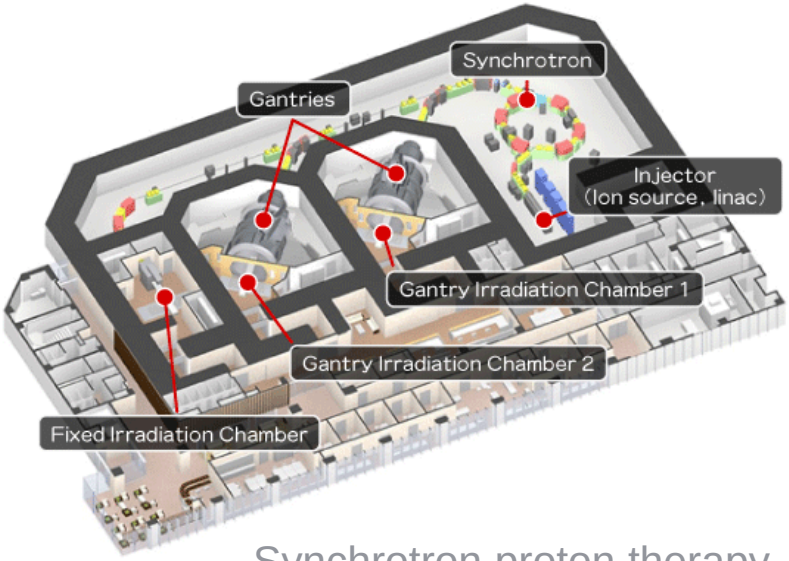

Synchrotron proton therapy

* https://bit.ly/2jVBdRR

AVO-ADAM LIGHT parameters

Linac Image Guided Hadron Therapy

- 13 RF stations (a 750 MHz RFQ and 12x 3GHz SCDTL and CCL)
- RF pulses 5 us at 200 Hz rep. rate
- Beam energy and charge modulation at 200 Hz
- Total peak RF power over 50 MW
- Proton source up to 300 uA, 20 us

ADAM
an ADVANCED ONCOTHERAPY company

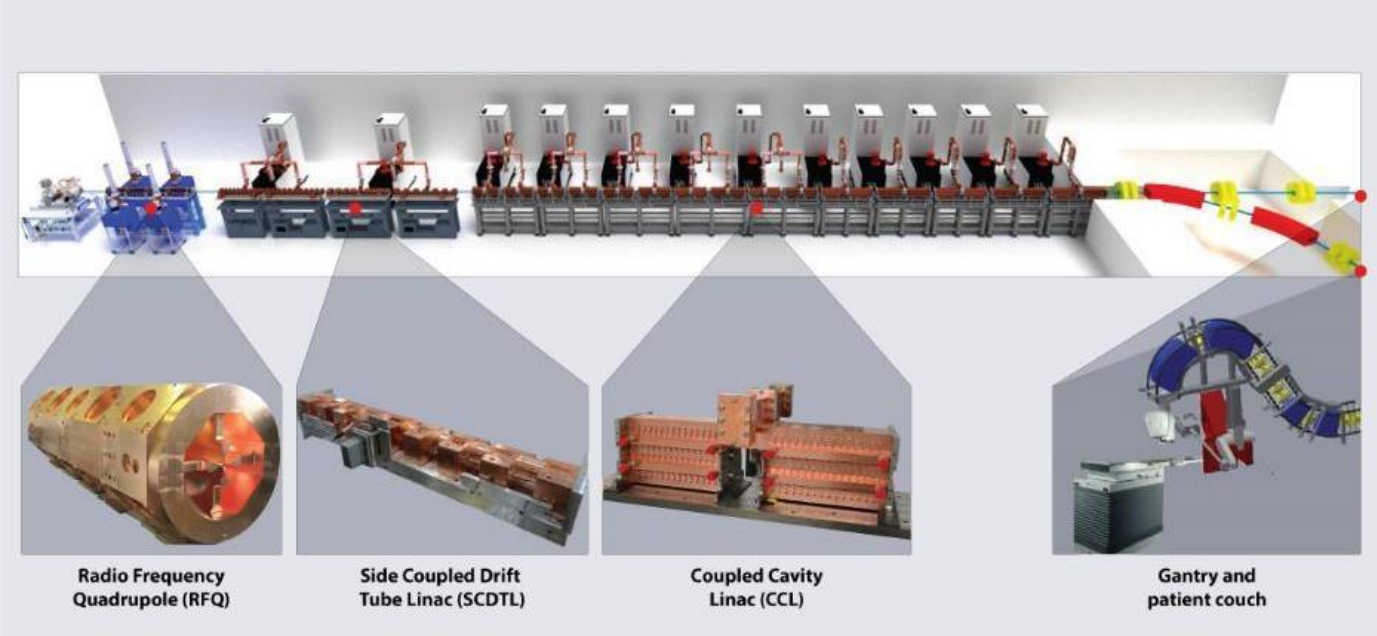

Proton acceleration

- Precise synchronization RF cavity field vs. Beam
- Cascaded RF stations: beam dynamics effects may spoil beam quality
- Sources of errors:
  - High power amplifier response
  - Cavity resonant frequency drifts (thermal expansion)
  - Amplifier working point (beam energy modulation)

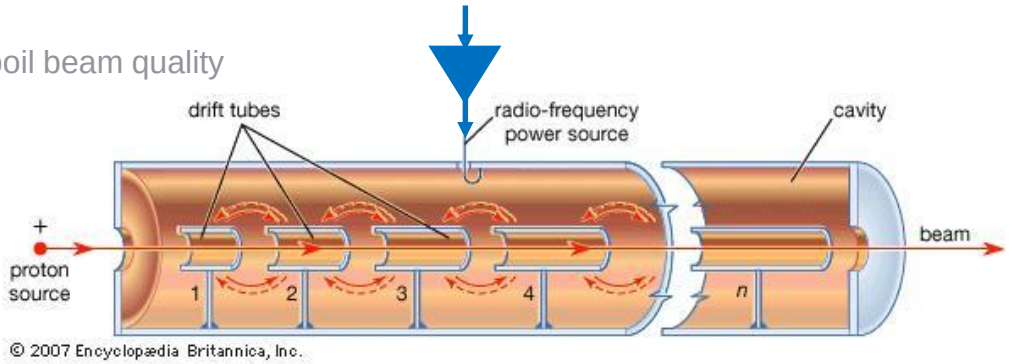

There is the need to actively control cavity field amplitude and phase!

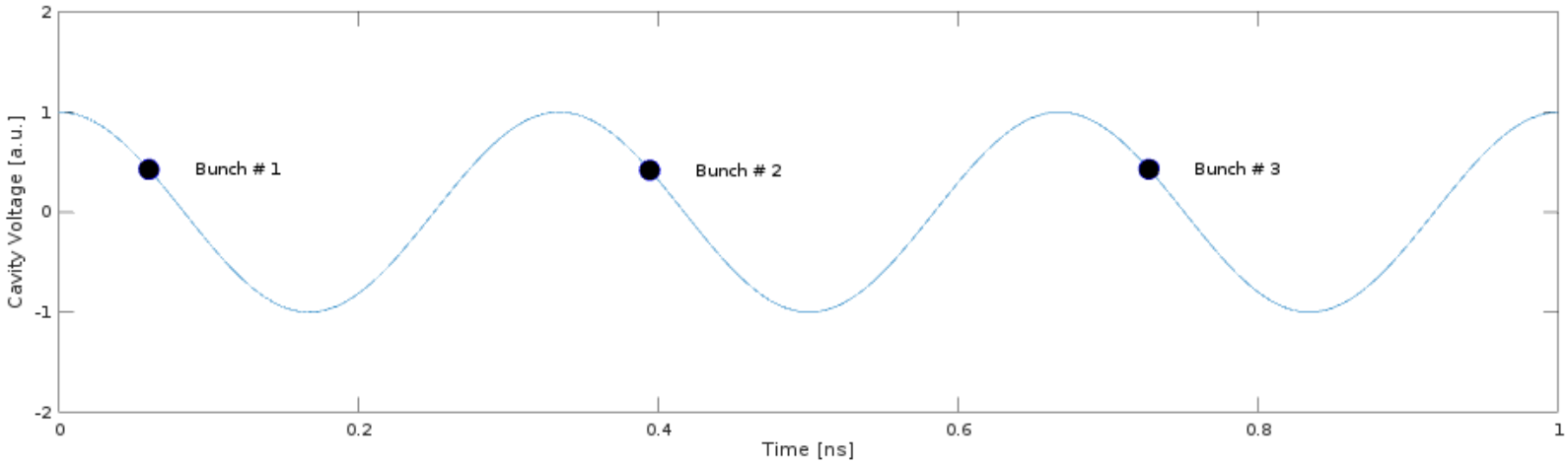

Digital LLRF control

LLRF systems:

- continuously measure RF cavity field amplitude and phase
- control high power RF to keep cavity field stable

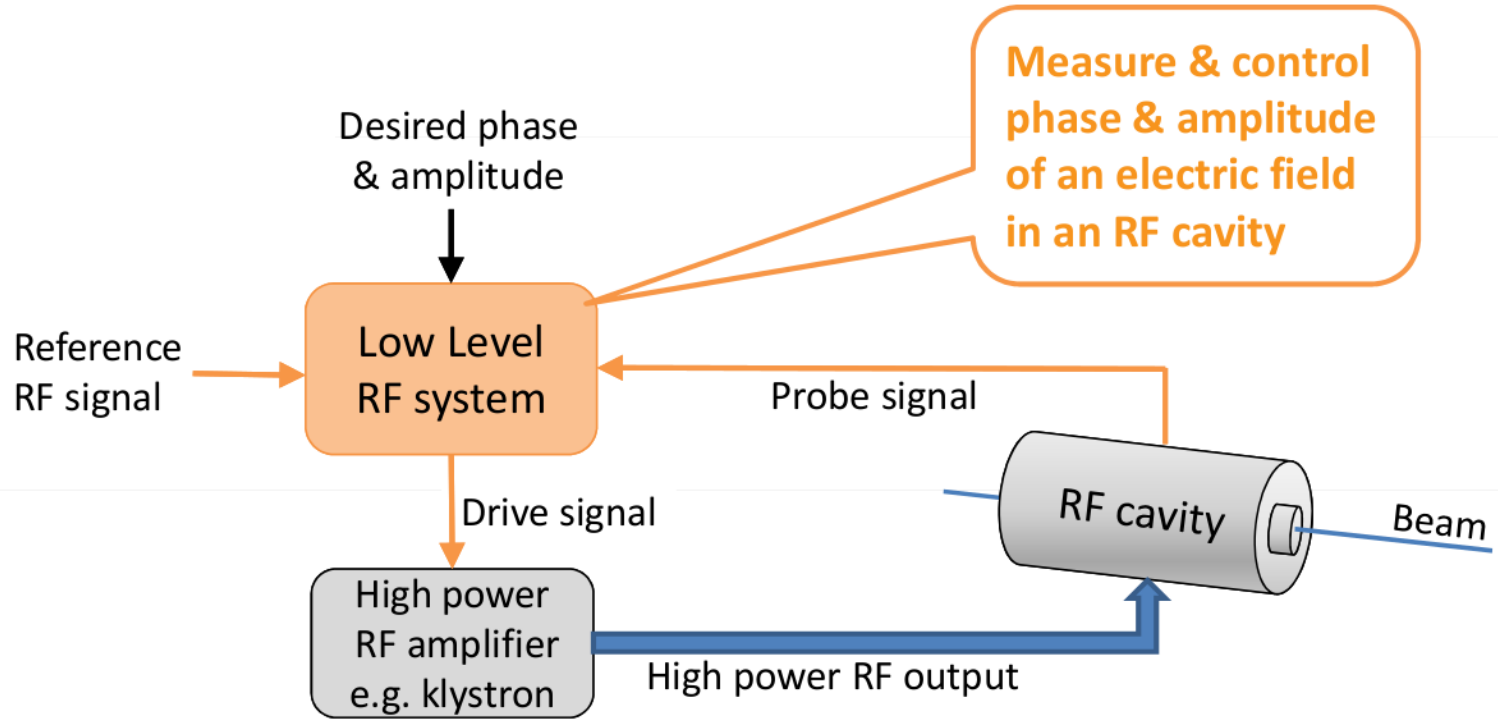

LLRF control for each RF station (cavity)

Digital LLRF block scheme

LLRF control systems are developed at two processing layers:

- **FPGA** layer applies deterministic (real-time) feedback on cavity voltage
- **SW (CPU)** layer for slower control functions (e.g. cavity tuning) and interfacing accelerator Control System and user

Analog front-end and back-end interface Digital Signals Processing with the RF signals.

Analog front-end stability: normally provided in a separate temperature stabilized chassis.

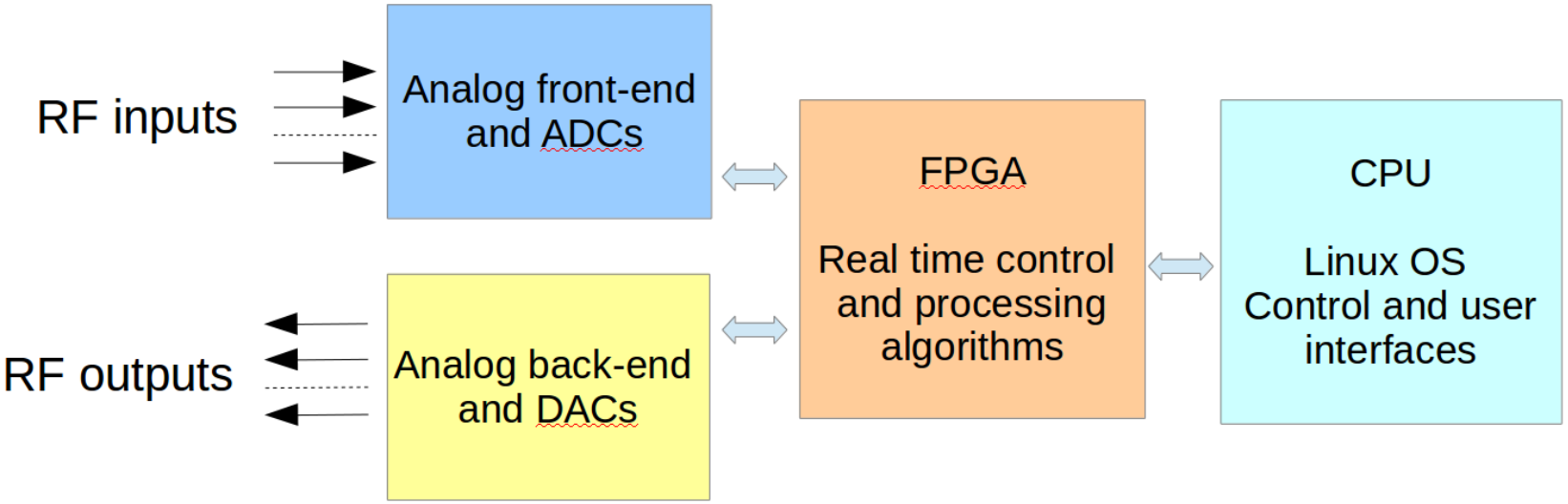

Libera LLRF

LLRF temperature stabilized RF front-end unit (19" 2U, up to 14 RF channels)

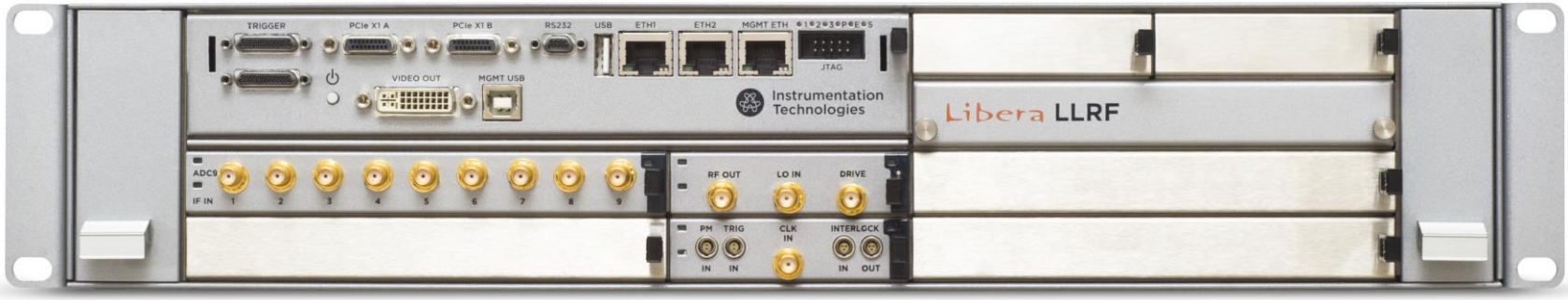

Libera LLRF processing unit (19" 2U, MTCA based modular platform)

- Experience of more than 500 platforms continuously running for years (different BPM applications and LLRF)
- Very high reliability (MTBF over 100 years)

Libera LLRF block diagram

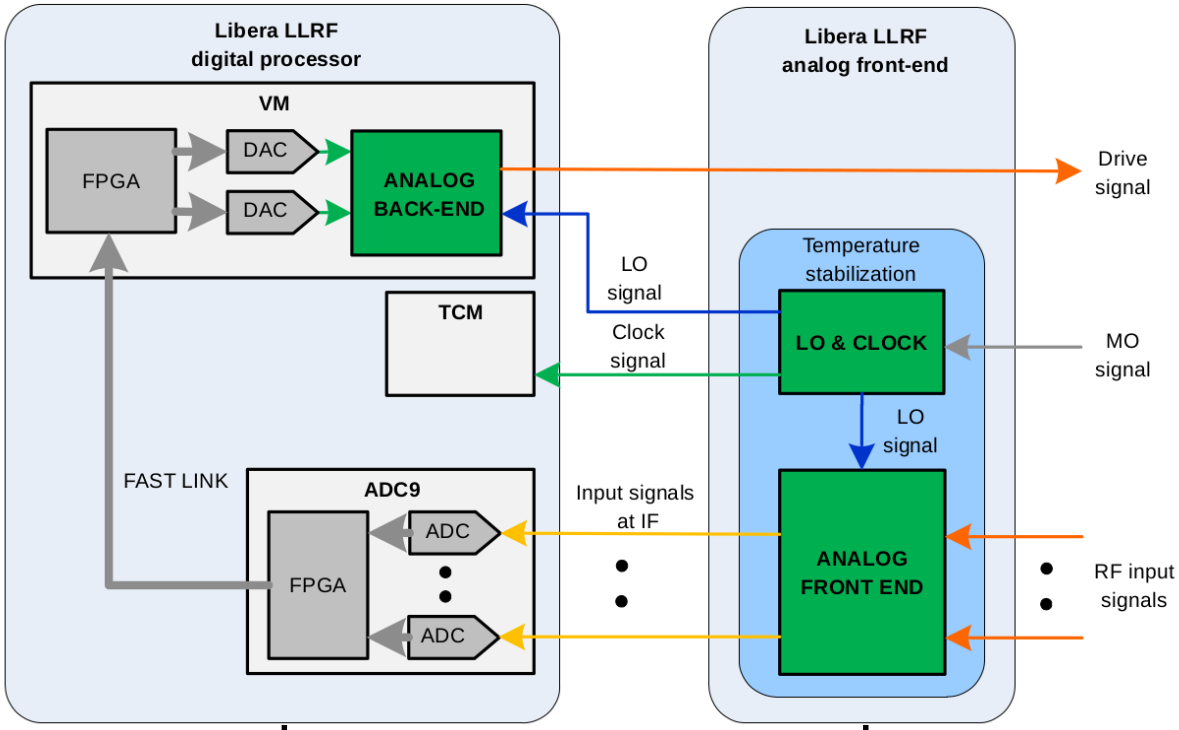

ADC9 module

Libera LLRF block diagram

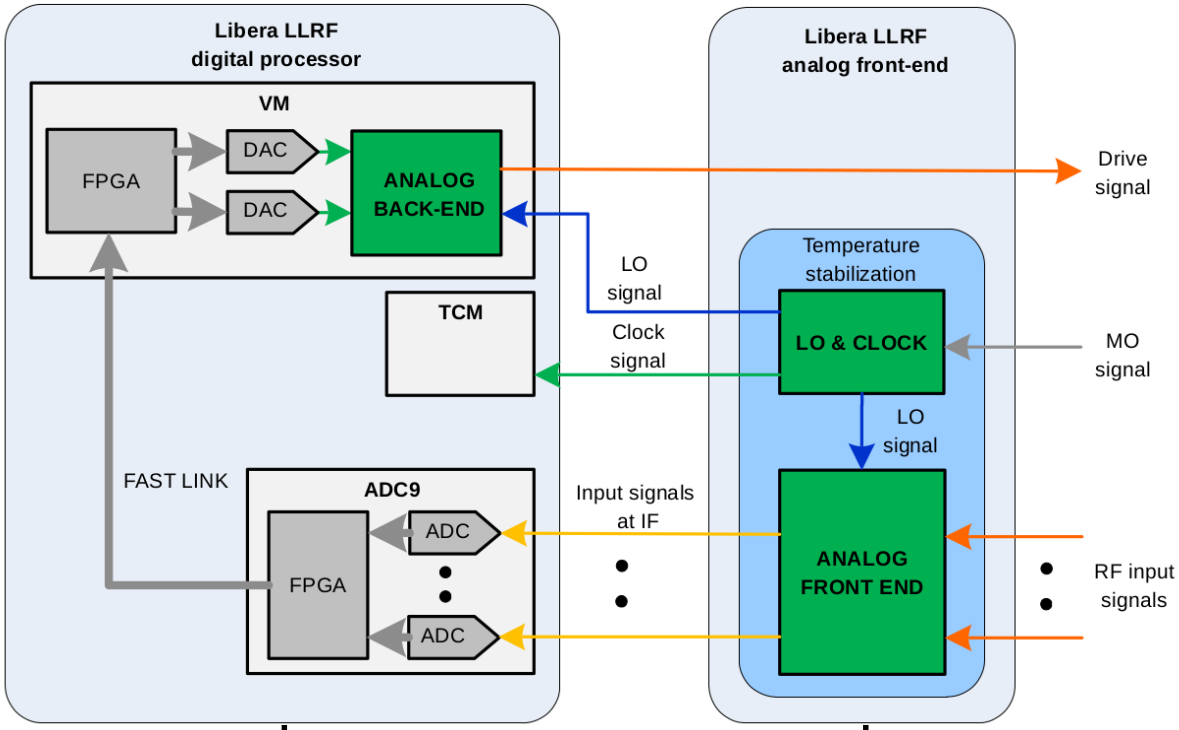

VM module

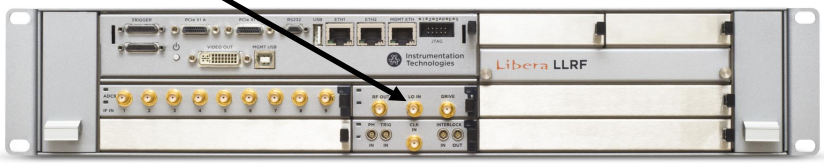

Libera LLRF block diagram

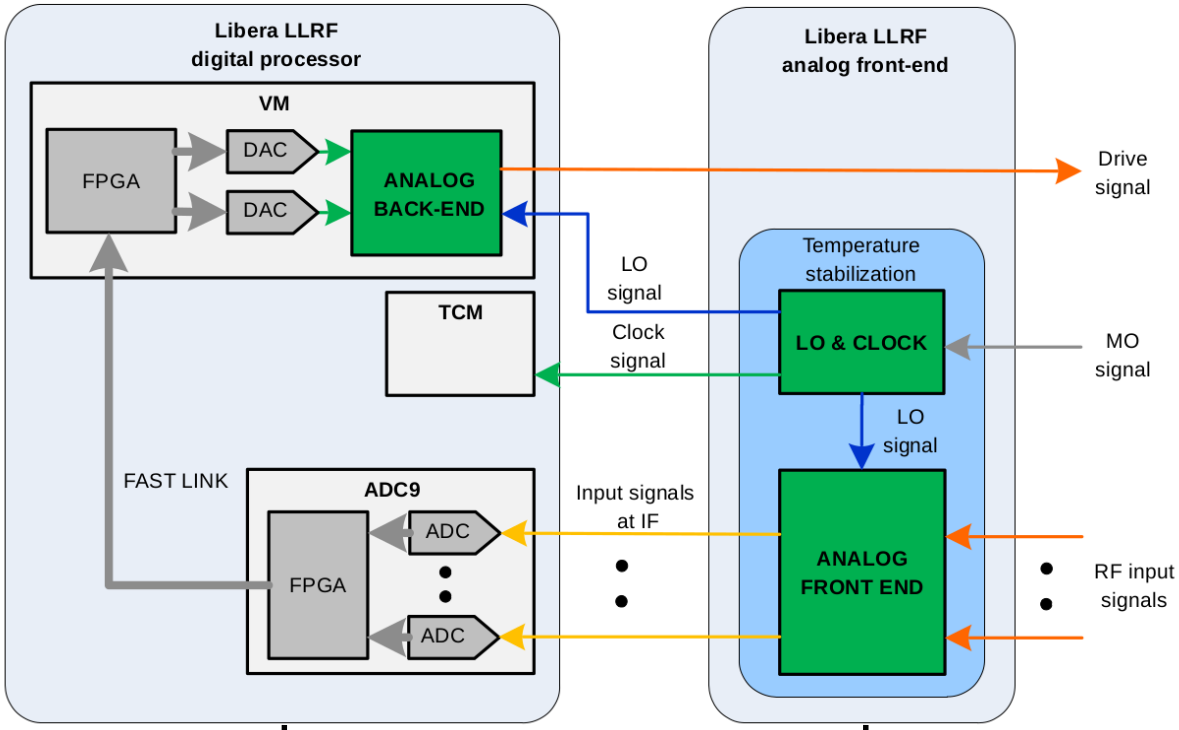

TCM module

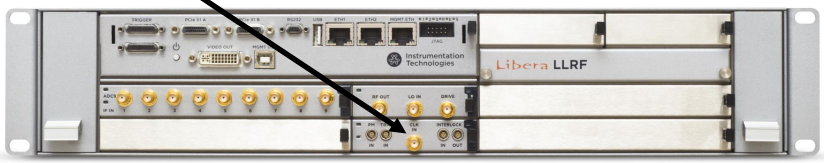

Signal processing scheme

- LLRF control is implemented separately for amplitude and phase (two independent controllers)
- RF pulse amplitude and phase shape can be arbitrarily configured by the user

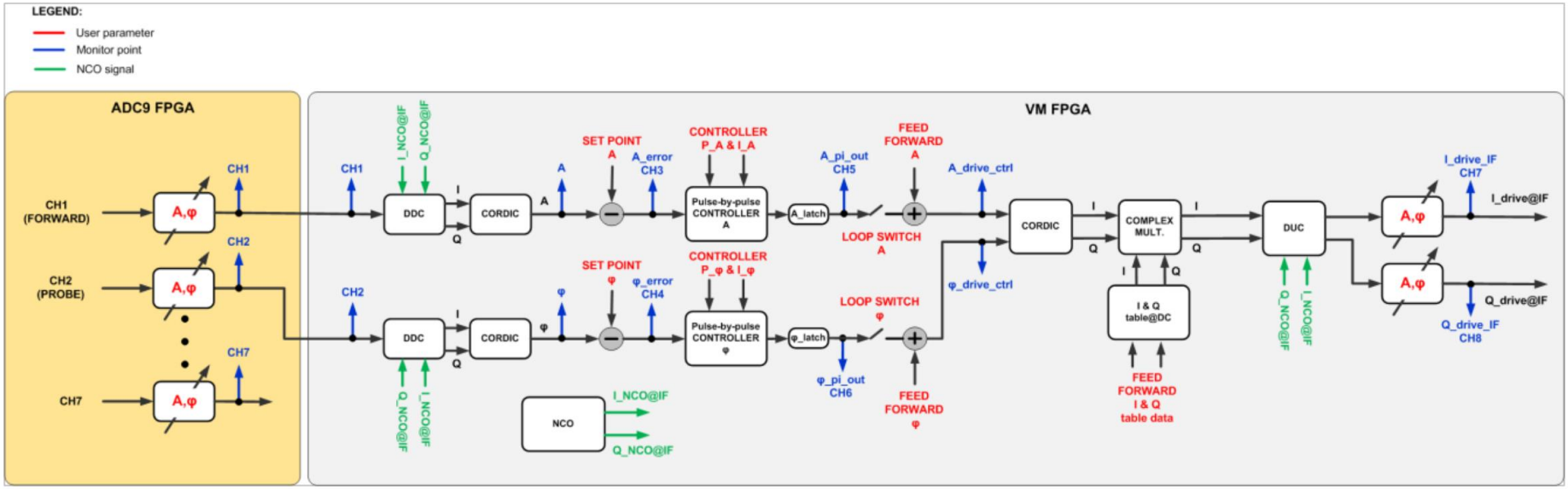

Arbitrary amplitude pulse shape profile example

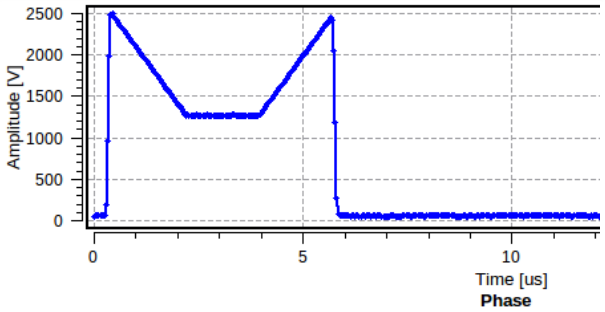

LIGHT cavity tuning system

- In addition to LLRF amplitude and phase loops a dedicated cavity tuning is required to keep cavities at resonance.

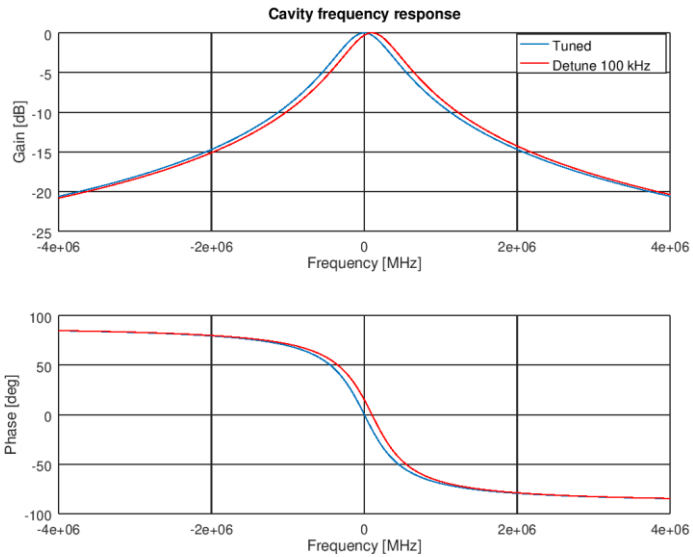

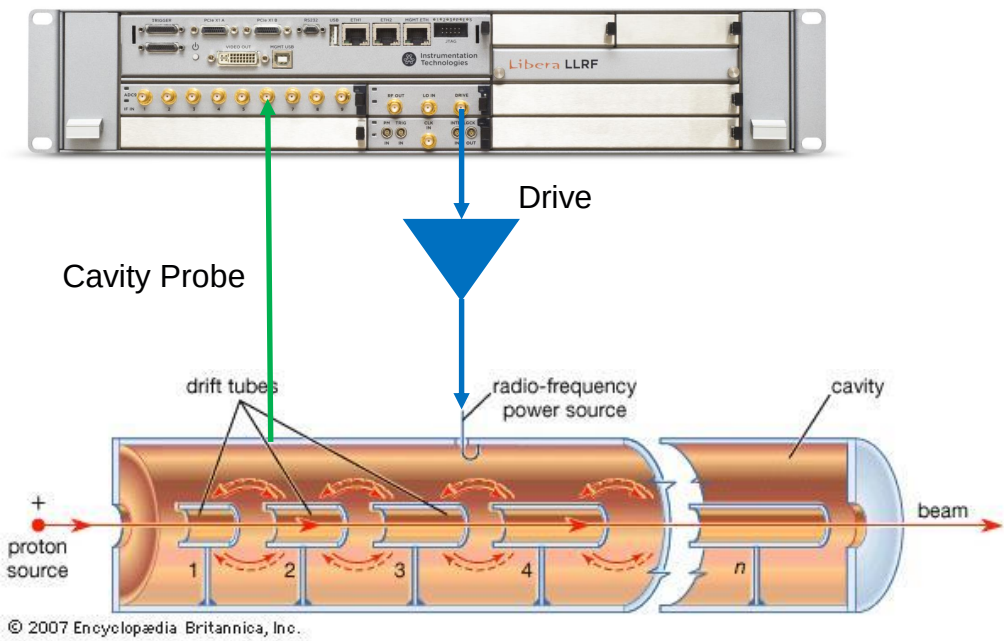

LIGHT cavity tuning loop

- Libera LLRF calculates the cavity resonant frequency from the exponentially free decaying field.
- The detune information is provided over Modbus interface to the cavity cooling system controller, that use it to keep cavities at resonance.

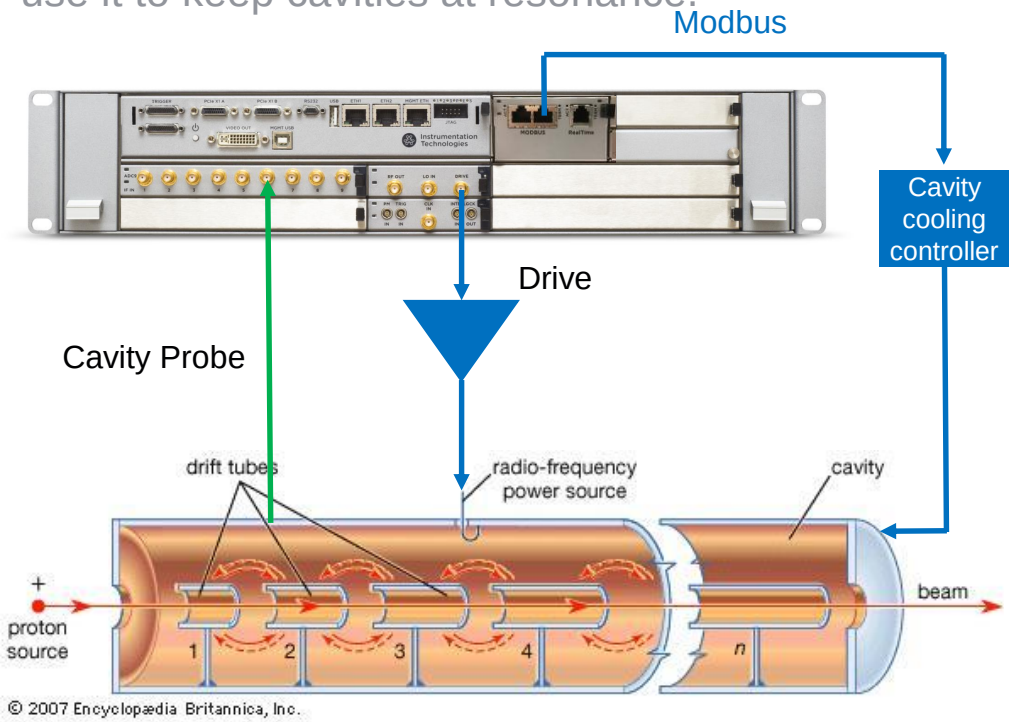

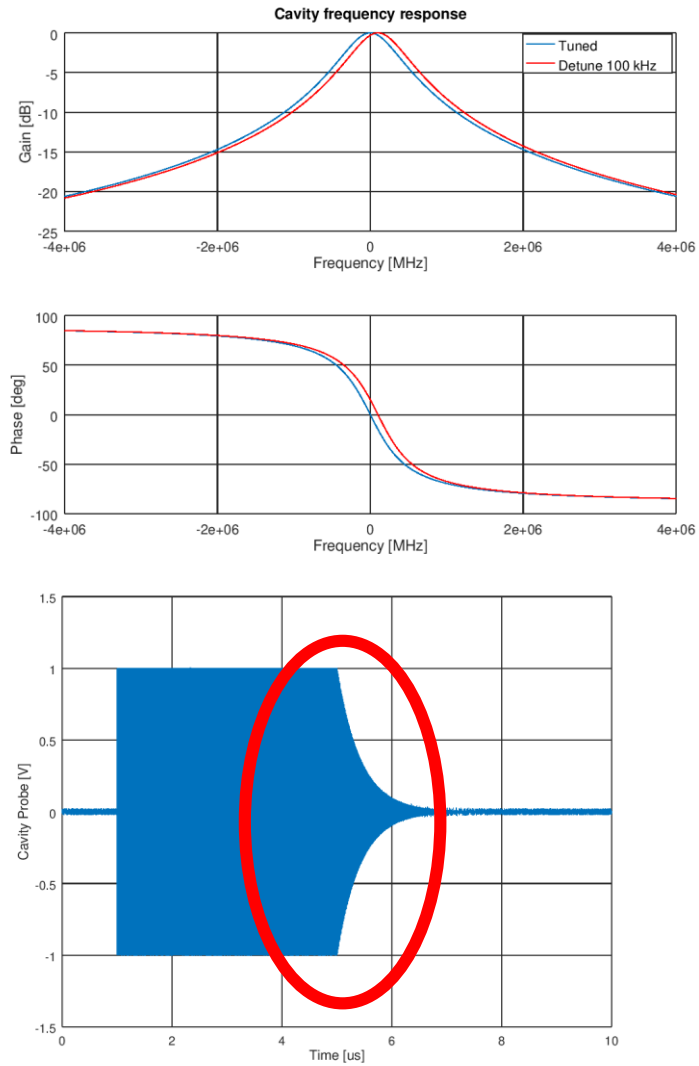

LIGHT real time control

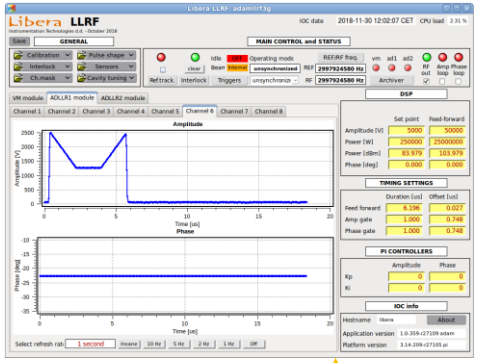

Remote user (Control System or GUI)

Network

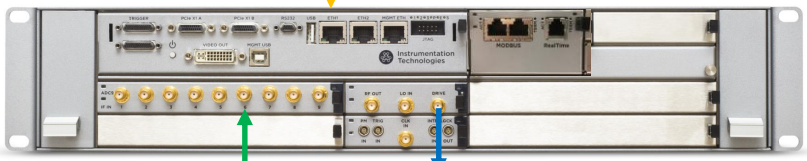

Cavity Probe

Drive

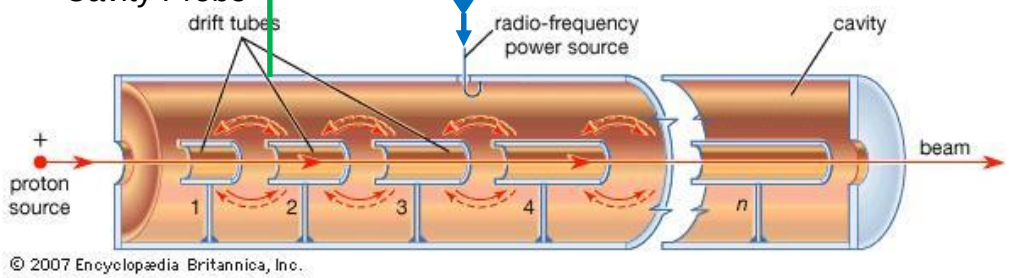

- Typically LLRF systems are integrated in accelerator network and accessed remotely to manually configure RF system parameters.
- To modulate proton energy a realtime control over all the RF pulse parameters is required (e.g. at 200 Hz rate).

LIGHT real time control

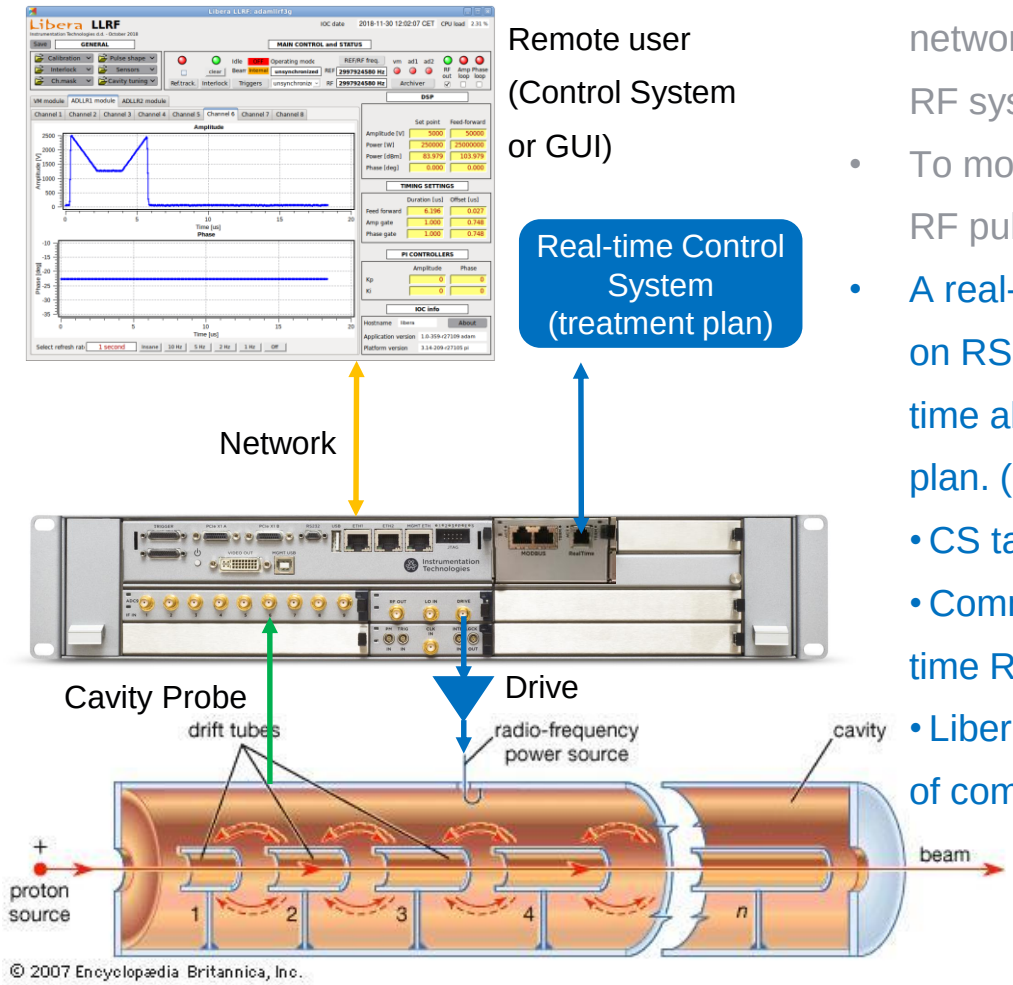

- Typically LLRF systems are integrated in accelerator network and accessed remotely to manually configure RF system parameters.
- To modulate proton energy a realtime control over all the RF pulse parameters is required (e.g. at 200 Hz rate).
- A real-time Control System (CS) protocol interface based on RS-485 has been developed to apply on time all the pulse parameters according to the treatment plan. (amplitude & phase shape, pulse timing)
  - CS talks directly to LLRF FPGAs
  - Communication is bidirectional (CS is tracking in real time RF system response on previous pulses)
  - Libera LLRF has instructions how to proceed in cases of communication failures.

LIGHT RF data archiving system

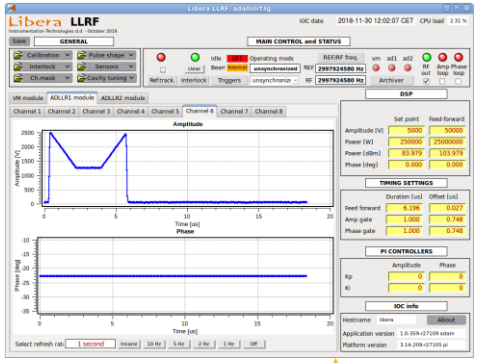

Remote user (Control System or GUI)

- The proton therapy application requires that all the RF pulses traces of a treatment are recorded and archived.
- A dedicated Ethernet network is used to stream all the data generated to an external archiving server.
- Each LLRF system generates 512 samples, for 13 channels at 200 Hz rate.

Network

Treatment data archiving server

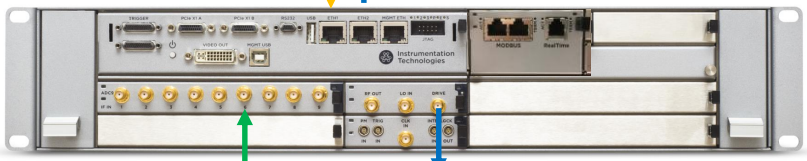

Cavity Probe

Drive

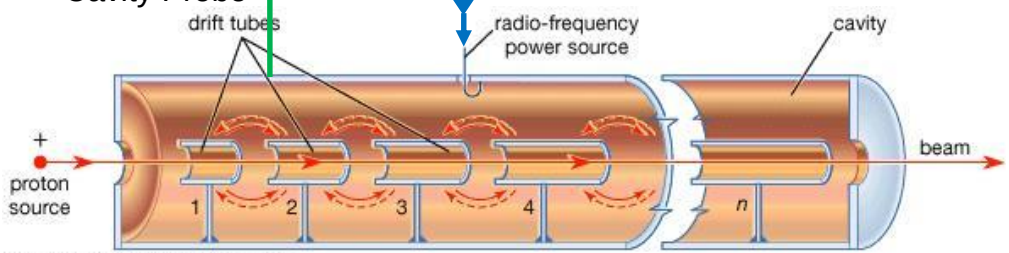

© 2007 Encyclopædia Britannica, Inc.

Performance

Amplitude and phase stability requirements are specified in a 20 dB dynamic range required for proton energy modulation.

Parameter		Required	Measured
RMS amplitude stability	(at full scale)	<0.05% RMS	0.004% RMS
RMS phase stability	(at full scale)	<0.05° RMS	0.002° RMS
RMS amplitude stability	(at –20 dB FS)	<0.1% RMS	0.013% RMS
RMS phase stability	(at –20 dB FS)	<0.1° RMS	0.007° RMS

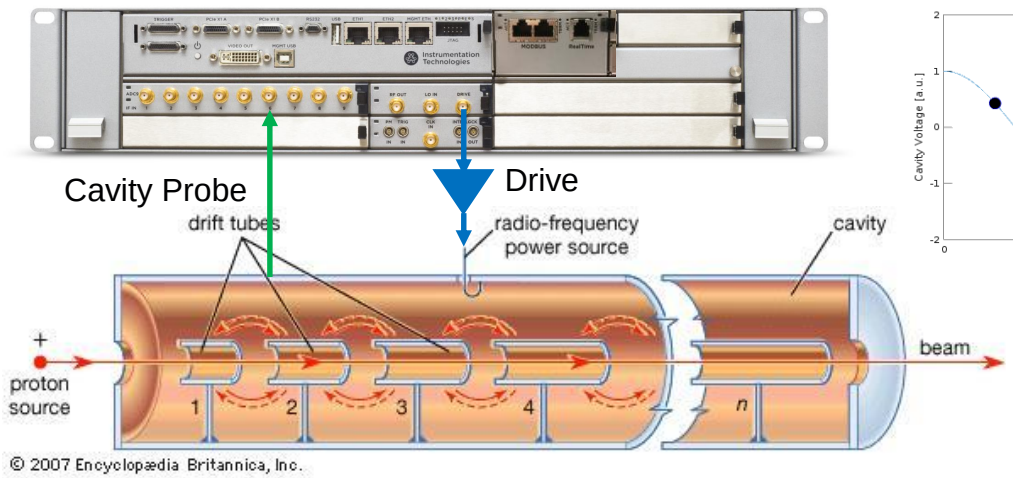

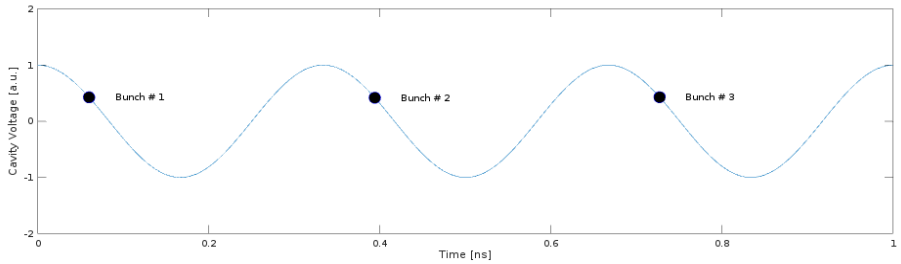

Other LLRF features

- **Interlock system:**
  - Normally LLRF systems stop operation in case an RF system failure it's detected (Interlock).
  - Failures are detected when signal exceeds predefined absolute threshold.
  - Beam energy modulation requires that relative thresholds are used for failure detection.
  - To increase beam availability LIGHT LLRF interlock system has been upgraded to tolerate a certain number of failures before stopping operation. Faulty RF stations are operated at low power and compensated by other stations.
- **Cavity conditioning:**
  - Before operation, each RF cavity needs to be conditioned in laboratory by applying power to it.
  - Special cavity conditioning mode has been developed to simplify cavity conditioning process: LLRF drive frequency is adjusted to track cavity resonance over the conditioning period.

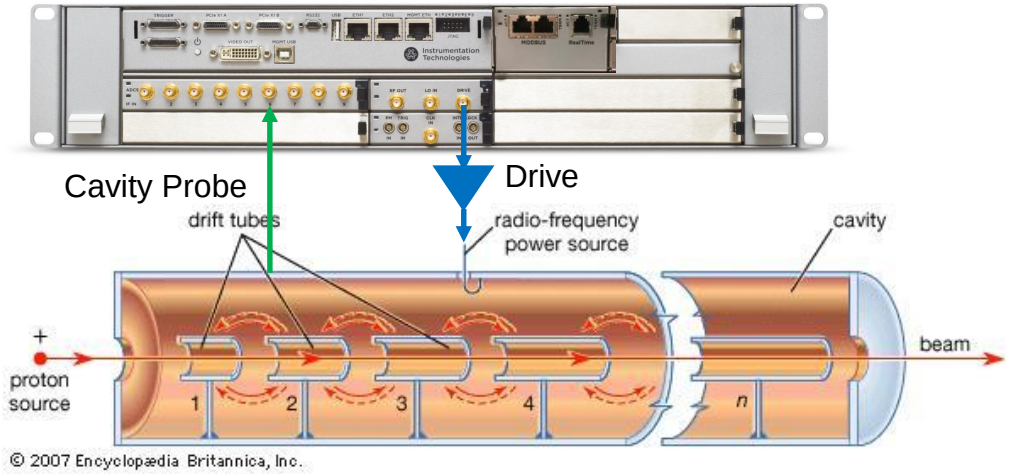

Status of the project

- First LIGHT machine prototype has been assembled and tested at ADAM (Geneva)
- 13 Libera LLRF systems have been delivered to AVO-ADAM (including Master Oscillator, distribution system, trigger synchronization unit, external drive signal amplifiers and interlock isolation system.
- Libera LLRF in all sub-systems successfully passed the SAT
- Further testing will be performed on LIGHT machine that is being built at STFC (Daresbury).

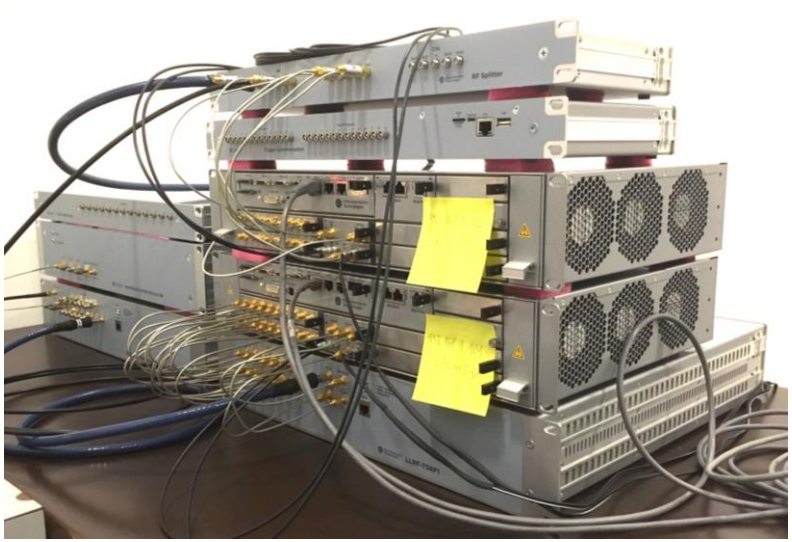

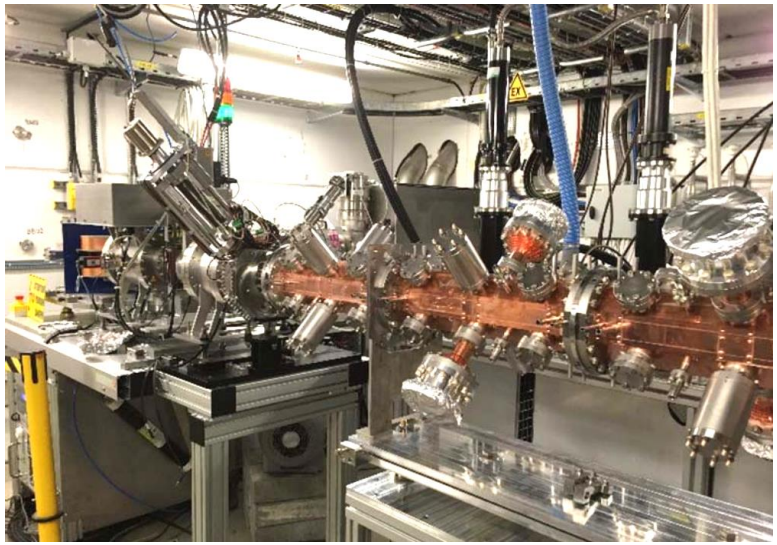

Thank you!

W W W . I - T E C H . S I