Direct measurement of the $^{19}F(p,\alpha)^{16}O$ reaction

T. Madgearu[1,2], G.L. Guardo[3], C. Matei[1], D. Lattuada[3], D.L. Balabanski[1], M. La Cognata[3], L. Lamia[3], R.G. Pizzone[3], S. Romano[3], A. Tumino[3]

1. Extreme Light Infrastructure – Nuclear Physics, IFIN-HH, Magurele, Romania
2. Polithenica Univerisity of Bucharest – SDIALA, Bucharest, Romania
3. Instituto Nazionale di Fisica Nucleare – Laboratori Nazionali del Sud, Catania, Italy

The $^{19}F(p,\alpha)^{16}O$ is one of the most important reaction for understanding the fluorine abundance in the outer layers of asymptotic giant branch (AGB) stars and it might also play a role in hydrogen-deficient post-AGB star nucleosynthesis. Up to now, theoretical models overproduce fluorine abundances in AGB stars with respect to the observed values, thus calling for further investigation of the reactions involving fluorine. $^{19}F(p,\alpha_0)^{16}O$, $^{19}F(p,\alpha_\pi)^{16}O$, $^{19}F(p,\alpha_\gamma)^{16}O$ contribute to the total reaction rate of $^{19}F(p,\alpha)^{16}O$.

In the last years, new direct and indirect measurements improved significantly the knowledge of the $^{19}F(p,\alpha_0)^{16}O$ cross section at deeply sub-Coulomb energies (below 0.8 MeV). In order to solve the discrepancies between the two previous measurements (0.6-0.8 MeV), here we present a new direct experiment performed using a silicon strip detector array (LHASA – Large High-resolution Array of Silicon for Astrophysics). Our results clearly confirm the trend of the latest experimental data in the energy region of interest.

A new experimental campaign aiming to measure a wider angular range (using LHASA coupled with ELISSA – Extreme Light Infrastructure Sillicon Strip Array detector) and a lower energy range will be performed in September 2022. In addition, the good identification of the reaction channel confirmed by our new simulation code strongly push for a measurement focused on the critical $^{19}F(p,\alpha_\pi)^{16}O$ reaction channel, fundamental for astrophysical purpose.

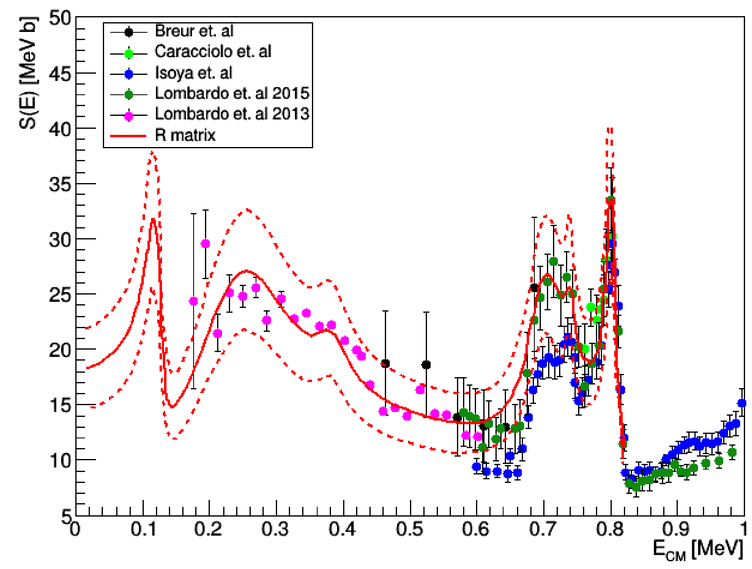

Figure 1: S-factor of the $^{19}F(p,\alpha_0)^{16}O$ reaction available in literature

$^{19}F(p,\alpha_0)^{16}O$ REACTION MEASURED AT INFN-LNS

Introduction

Figure 1 reports a summary of the S-factors from available data in literature for the $^{19}F(p,\alpha_0)^{16}O$ reaction. The most recent data show a large discrepancy with respect to the previous data available in the NACRE compilation.

Despite its importance, the S-factors and the branching ratio (Figure 2) between the α_0, α_π and α_γ outgoing channels in the $^{19}F(p,\alpha)^{16}O$ reaction are still largely uncertain at astrophysical energies, pointing out the need for better measurements.

Experimental set-up

Beam:
9-18.5 MeV
450-925 keV in CMS
Spot size: 1 mm
Intensity: 1-5 nA

Target:
Self-suported CH_2
Thickness: 100 ug/cm^2
Continuously checked *via* RBS – Figure 3

The detection setup, shown in Figure 4, consist of 6 YY1 silicon strip detectors of 300 µm thick. It was optimized to detect the emerging alpha particles in a wide angular range (from 10◦ to 32◦).

Energy detector calibration was performed by means of ^6Li elastic and inelastic scattering in the energy range 12-20 MeV and using a ^{228}Th α-source.

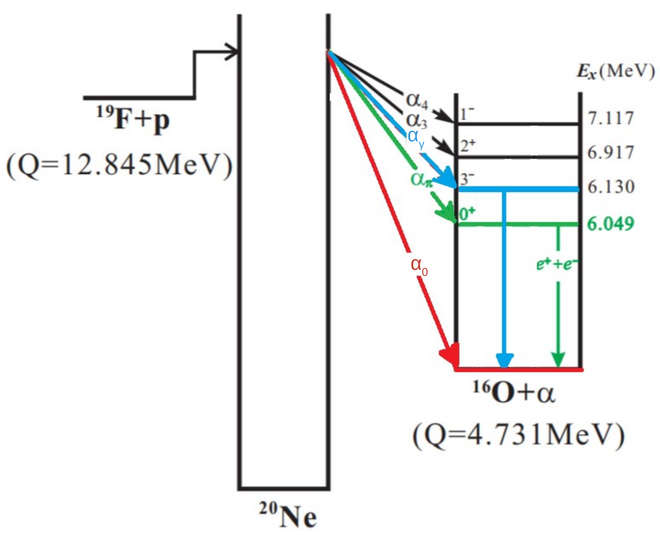

Figure 2: With red, green and blue – the three channel that contribute to the total reaction rate

Data analysis and results

The good agreement between the simulated data (reported with black points) and the calibrated experimental points is shown in Figure 5.

The spin and parity assignment for all of the measured energies are in accordance with the existing data in literature (Figure 6). In order to obtain the total cross section σ(E), angular distributions were integrated over 4π. Figure 7 presents the cross section of the $^{19}F(p,\alpha_0)^{16}O$ reaction.

The error bars take into account the statistical errors plus the overall systematic errors, 0.5% in the vertical axis, while the horizontal bars address for the total error of 12-15%.

Conclusions

The results are in agreement with previous assignments of spin parity of the resonances situated at 681 and 738 keV in CMS, which is due to the population of the 13.529 and 13.586 MeV excited levels of ^{20}Ne.

The resulting cross section confirms the previous data of Lombardo et al., solving the discrepancy between the latest measurements and the previous data reported in the NACRE compilation in the energy region of interest (0.6-0.8 MeV).

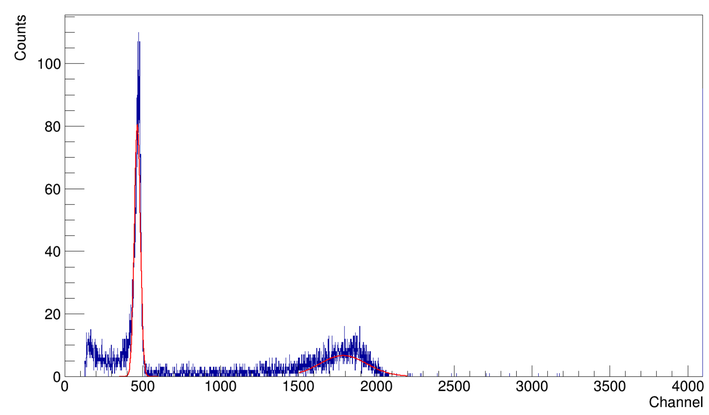

Figure 3: Target monitoring *via* RBS

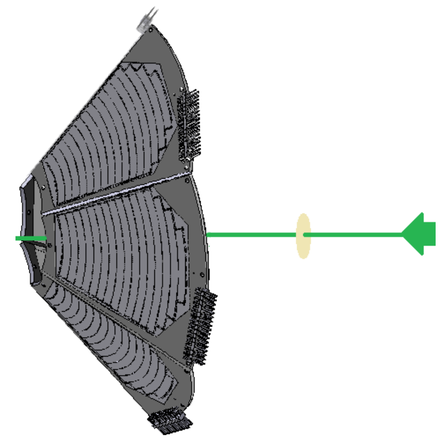

Figure 4: Detection setup

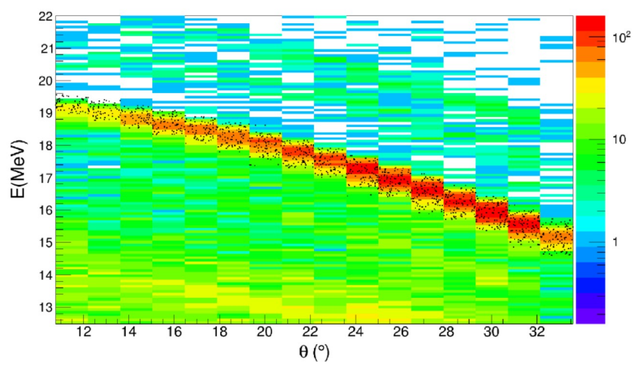

Figure 5: Comparison between simulated and experimental data

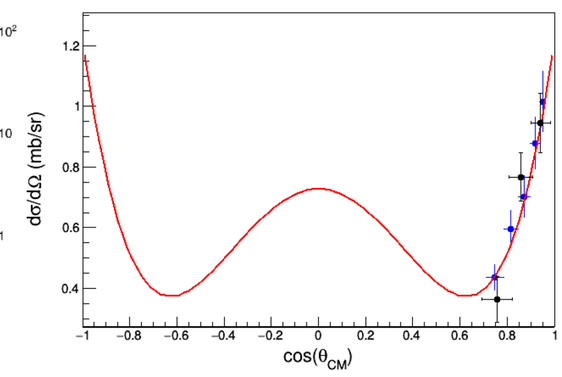

Figure 6: Angular distribution for 750 keV in CMS

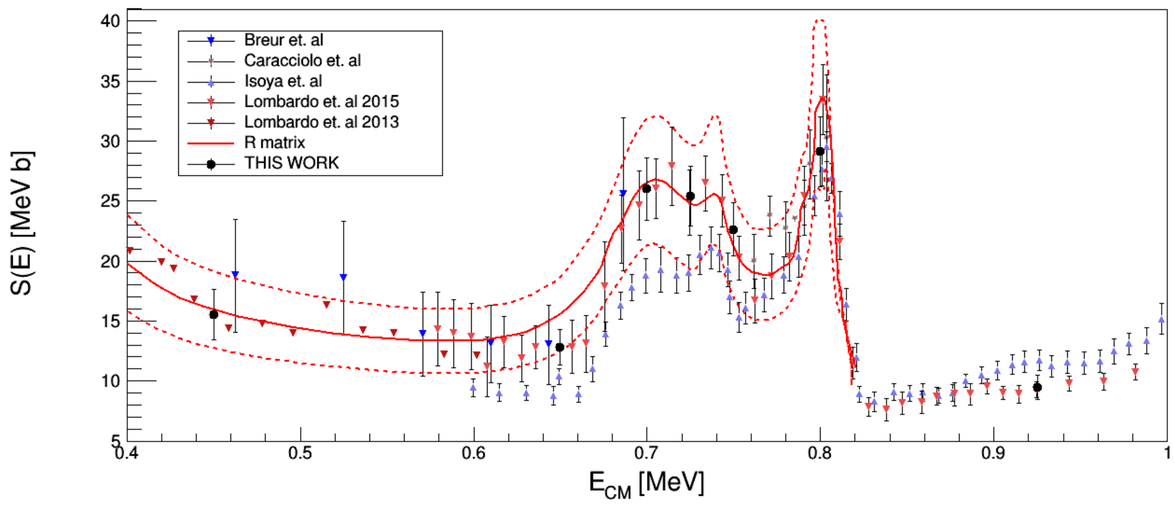

Figure 7: Astrophysical S factor of the 19F(p,α_0)16O reaction

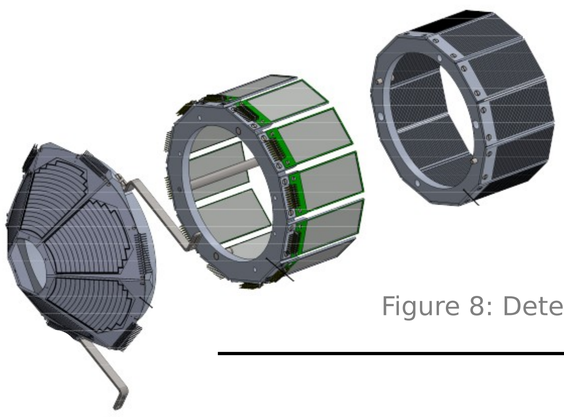

Figure 8: Detection setup

$^{19}F(p,\alpha_{0,\pi,\gamma})^{16}O$ UPCOMING MEASUREMENT AT IFIN-HH

Beam:
7-15 MeV
350-750 keV in CMS
Spot size: 1 mm
Intensity: 1-5 nA

Target:
Self-suported CH_2
Thickness: 50 ug/cm^2
Continuously checked *via* RBS

Detection system:
The detection setup, shown in Figure 8, consist of 5 YY1 silicon strip detectors of 300 µm thick coupled with 12 X3 position sensitive detectors of 1 mm thick. The detection system is optimized to detect the emerging alpha particles in from 10◦ to 55◦. Due to the increased energy resolution, this setup will be able to separate α_π and α_γ reaction channels.

nuclear physics

Acknowledgments

This work is partially supported by the Extreme Light Infrastructure Nuclear Physics Phase II, a project co-financed by the Romanian Government and the European Union through the European Regional Development Fund the Competitiveness Operational Program (1/07.07.16, COP, ID1334), by ENSAR2, a project financed by the European Union's Horizon 2020 research and innovation program under grant agreement No. 654002 and by the Italian Ministry of University (MIUR) under grant LNS - Astrofisica Nucleare (fondi premiali).

Drd. Teodora Andreea Madgearu
Extreme Light Infrastructure – Nuclear Physics
Str. Reactorului 30, Măgurele 077125
Romania

teodora.petruse@eli-np.ro