CHEF 2019
Calorimetry for the High Energy Frontier
25 - 29 November 2019, Fukuoka

The electronics of the upgraded LHCb calorimetry system

Marco Pizzichemi (CERN)
on behalf of the LHCb collaboration

The LHCb detector

Forward arm spectrometer: study of CP violation, physics of b-quark, B-mesons, charm and heavy hadrons

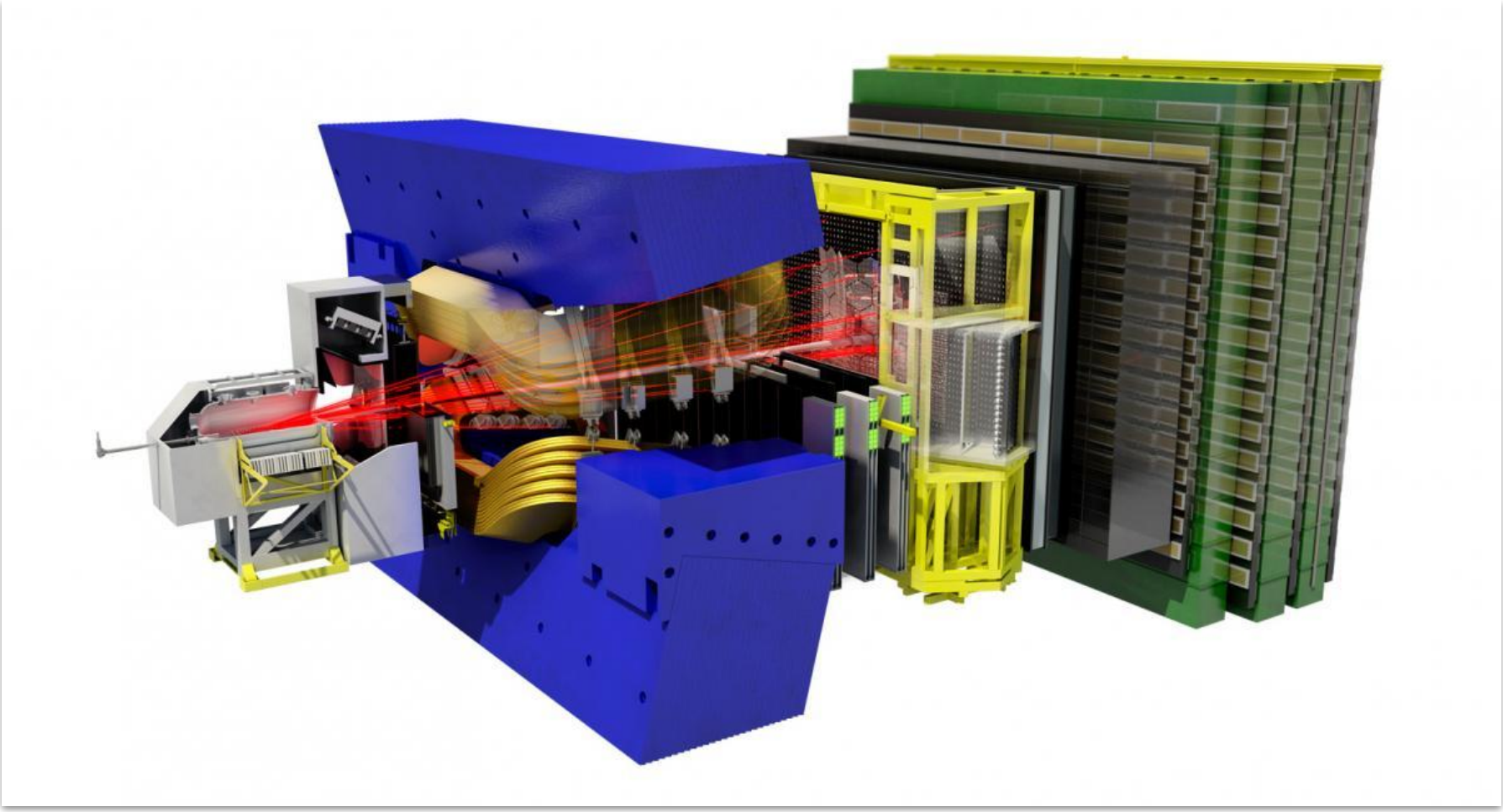

The LHCb detector

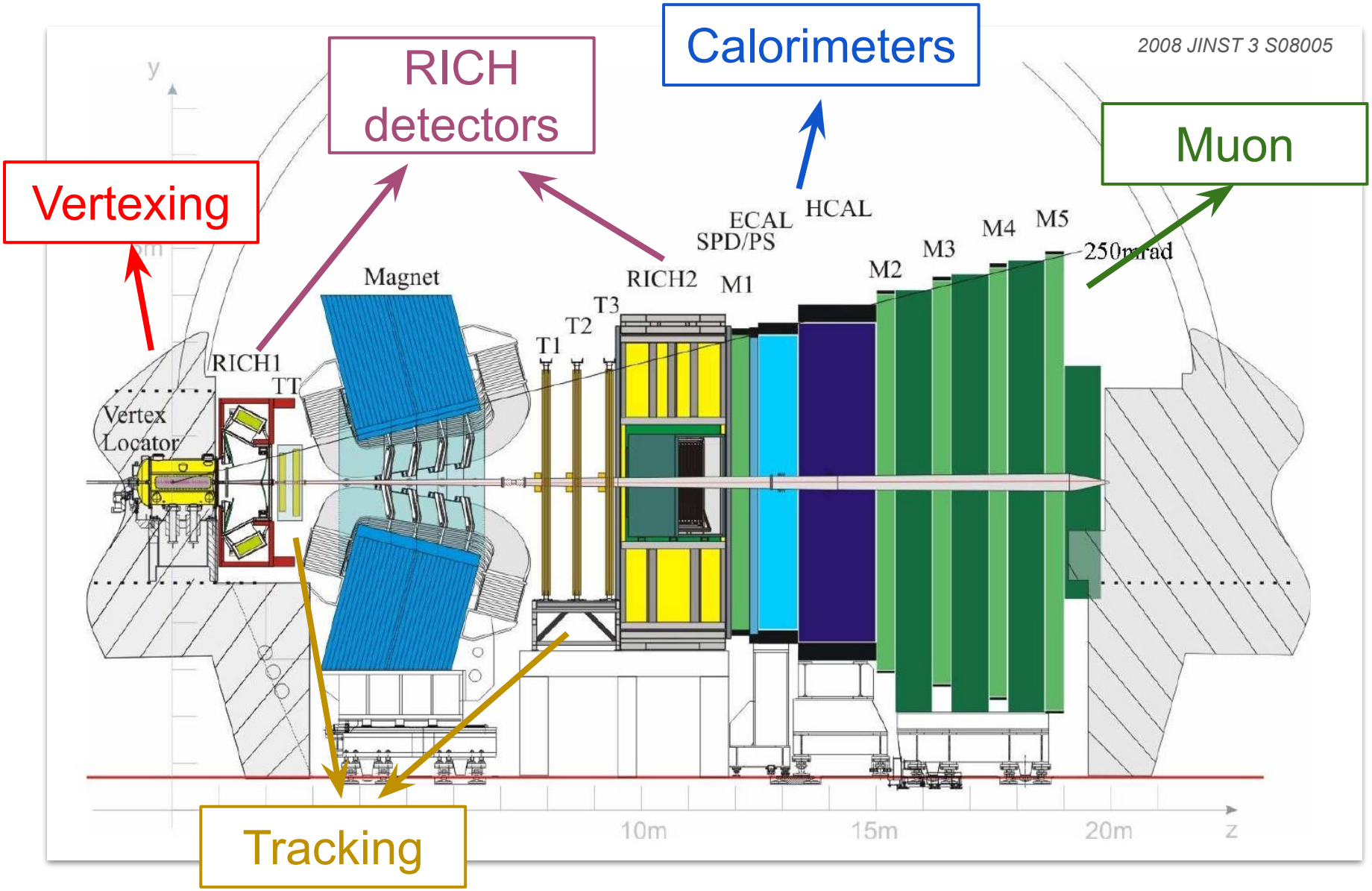

Run 1-2 LHCb calorimetry system

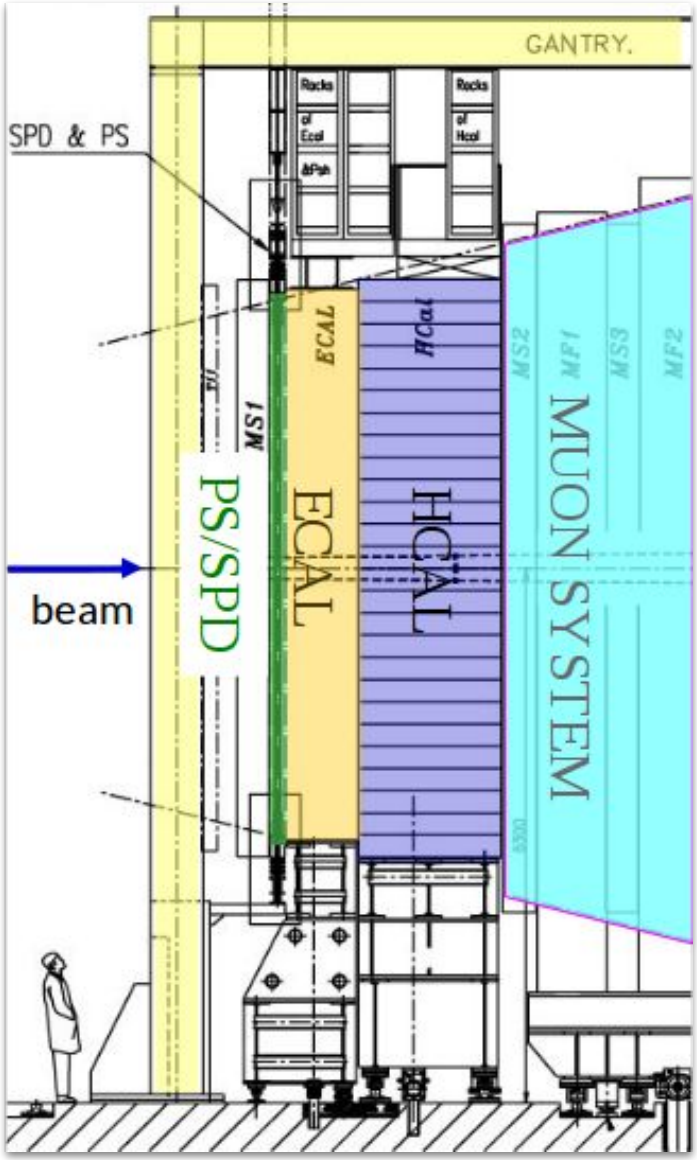

- Solid angle coverage 300x250 mrad
- Distance from interaction point ~12.5 m
- Four sub-detectors: SPD, PS, ECAL, HCAL
- Based on scintillator/WLS (with PMTs)

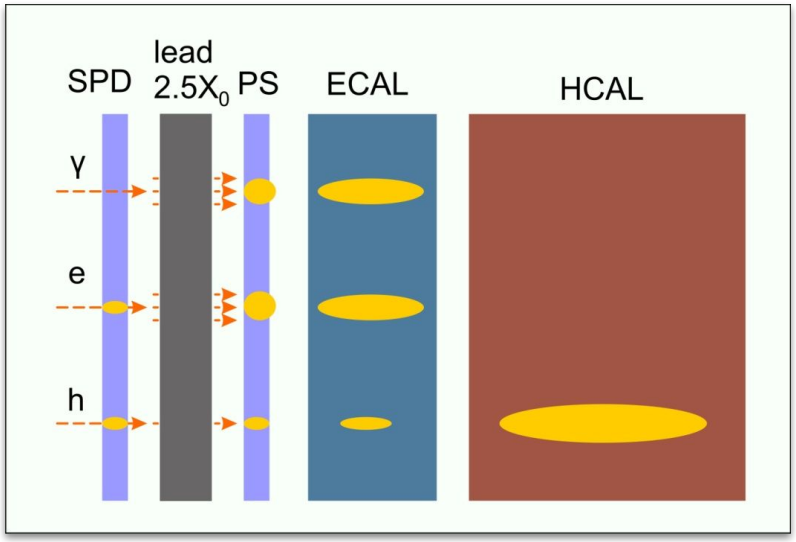

- **L0 trigger** on high p_T, $e^{\pm}$, π^0, γ, hadron
- Precise **energy measurement** for $e^{\pm}$ and γ
- **Particle identification**: $e^{\pm}$/γ/hadron, and contributes to Muon ID (HCAL)

LHC upgrades timeline

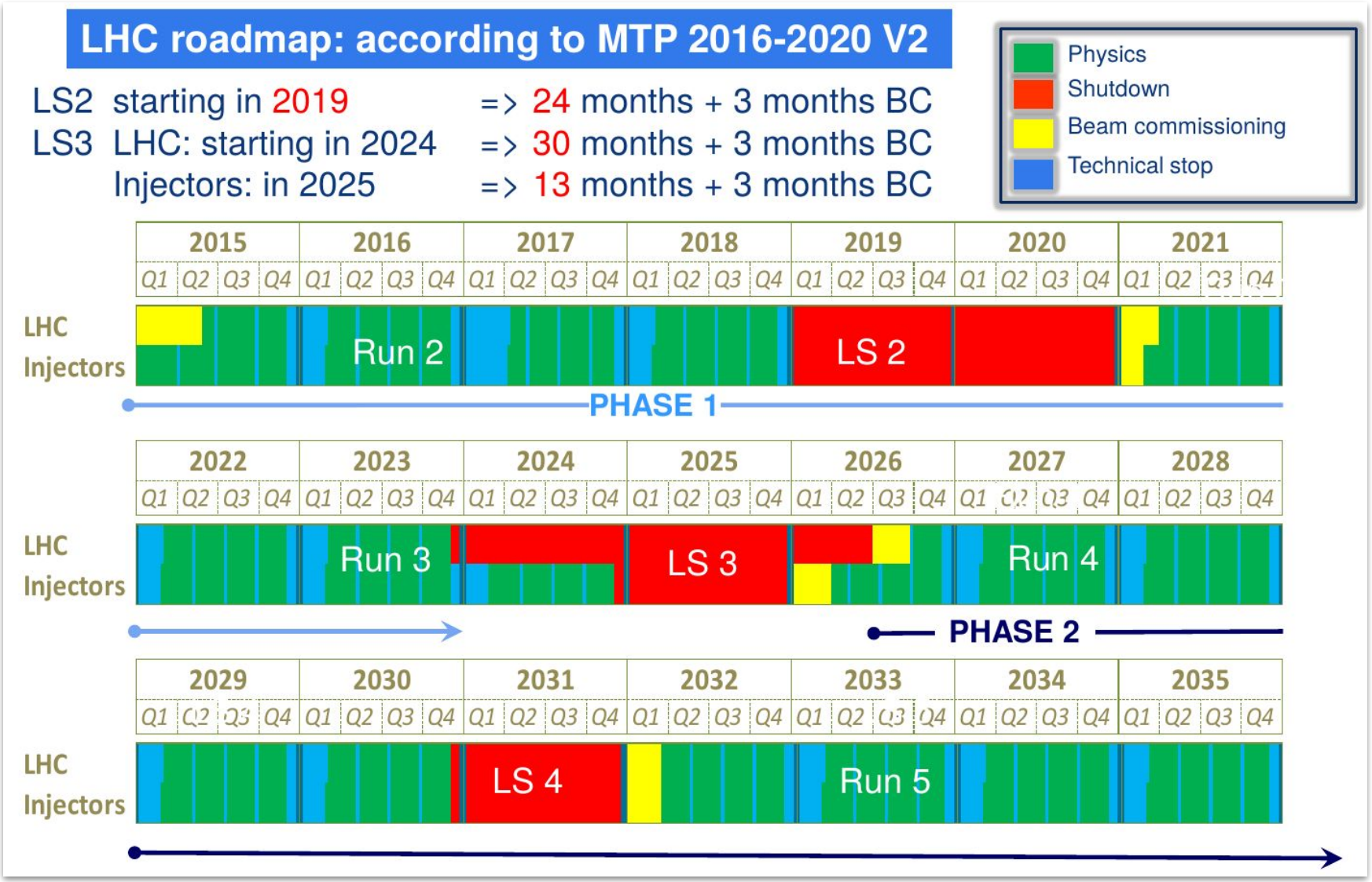

Phase-I LHCb upgrade

The **1 MHz L0** trigger saturates physics processes yield with increasing luminosity

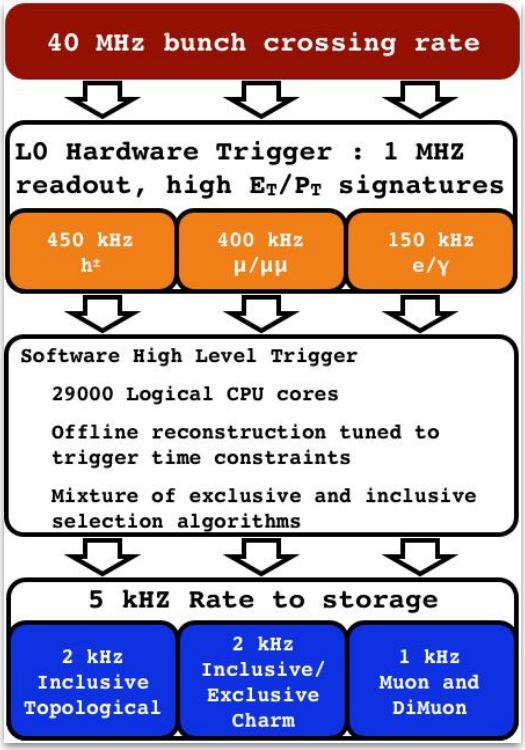

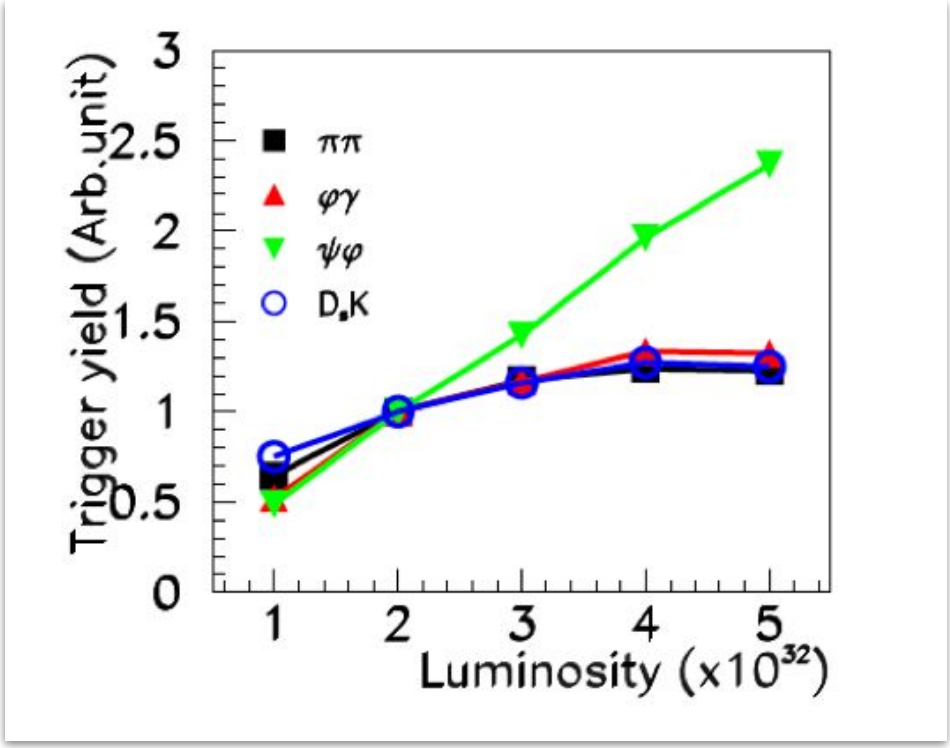

- ➔ At high luminosity, need to increase p_T threshold to remain within 1 MHz
- ➔ Rate reduced, fraction of events of interest remains the same
- ➔ Rate of physics processes saturates

Phase-I upgrade strategy

SOLUTION: remove the first level hardware trigger

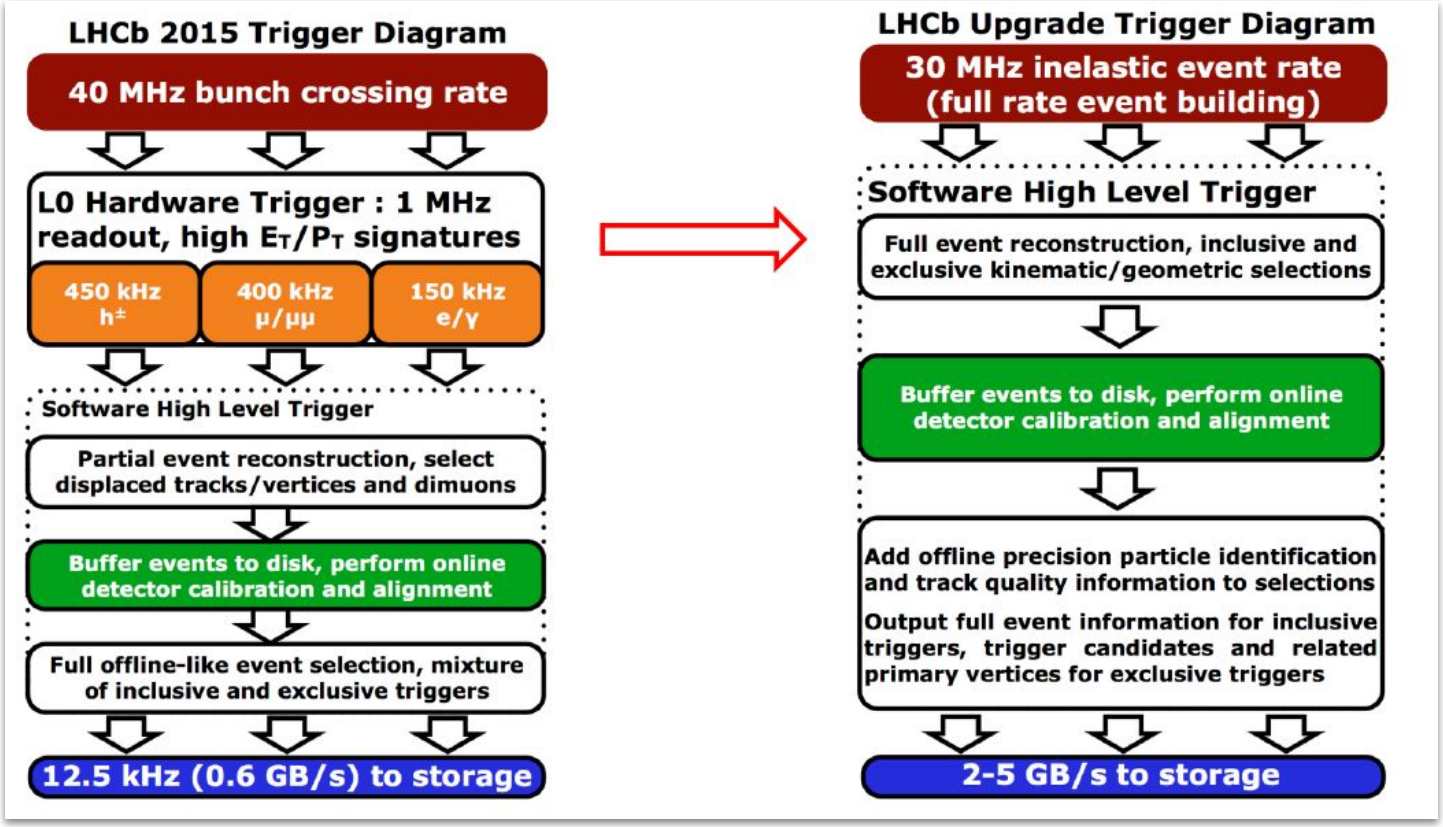

Electronics need to be redeveloped

Phase-I upgrade strategy

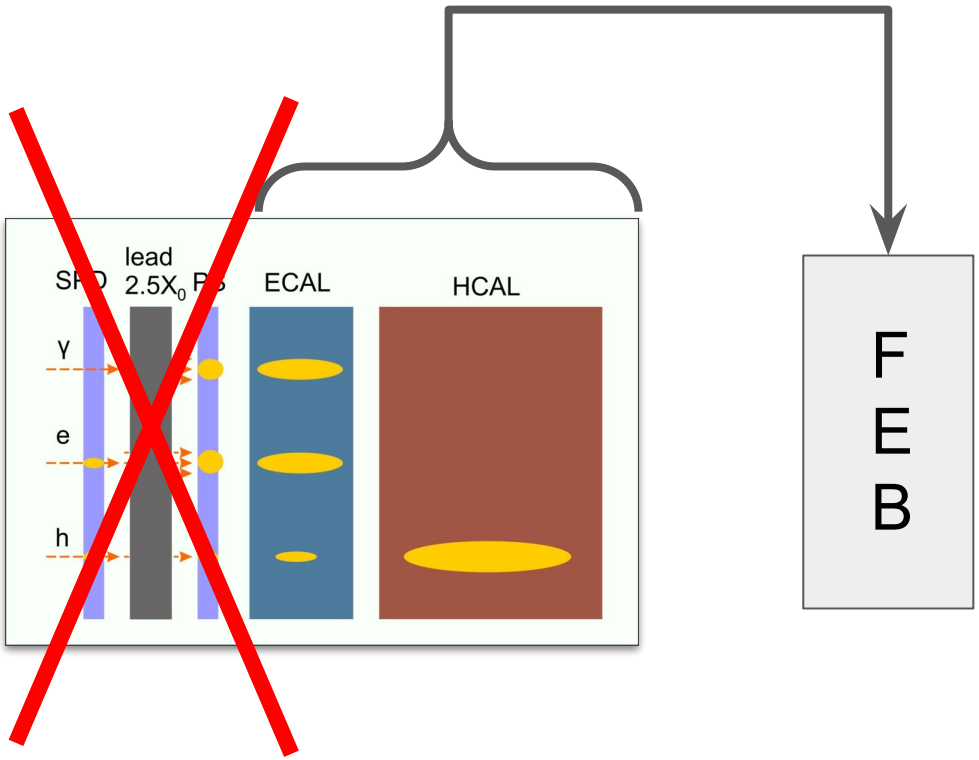

- ➔ Part of trigger calculation (LLT)
- ➔ Front end data

- ➔ Control boards fully redesigned (now called 3CU)
- ➔ Crates modified
- ➔ Power supplies kept and adapted to new requirements

Calorimeters & front end electronics

Calorimeter crates

On gantry above calorimeter: 18 crates

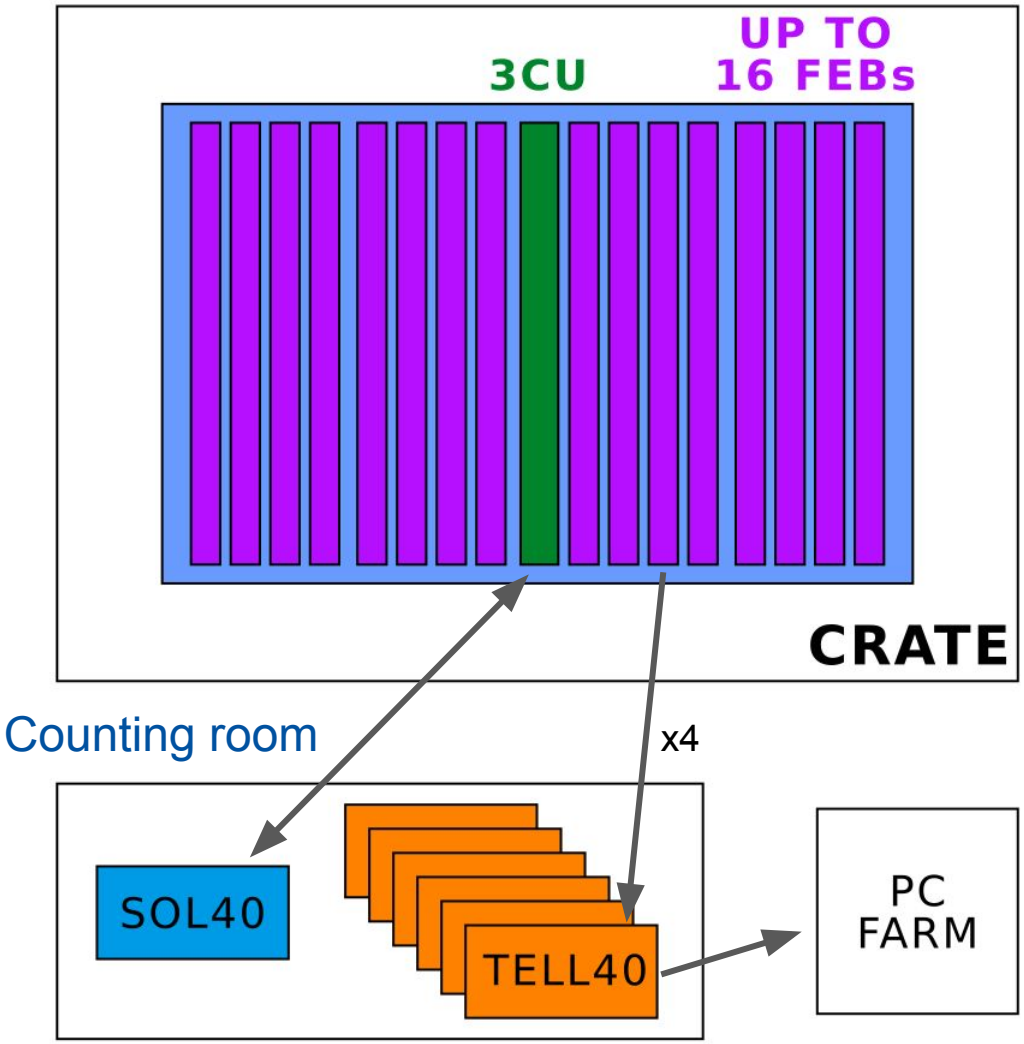

- 18 crates for ECAL and HCAL:
  - Control unit (3CU)
  - Up to 16 FEBs
- Each 3CU receives (1 bi-dir. link)
  - The clock
  - The fast command
  - The slow control

  … and distributes them on the backplane
- Each FEB receives clock, commands and configuration from 3CU (backplane) and provides data on 4 optical links (mono-dir)
- Data from 1 FEB is made of
  - ADC values of the 32 channels
  - The Low Level Trigger (LLT), i.e. the result of a sum/comparison that can be used by the software trigger in the PC farm

Run 1-2 analog signal processing

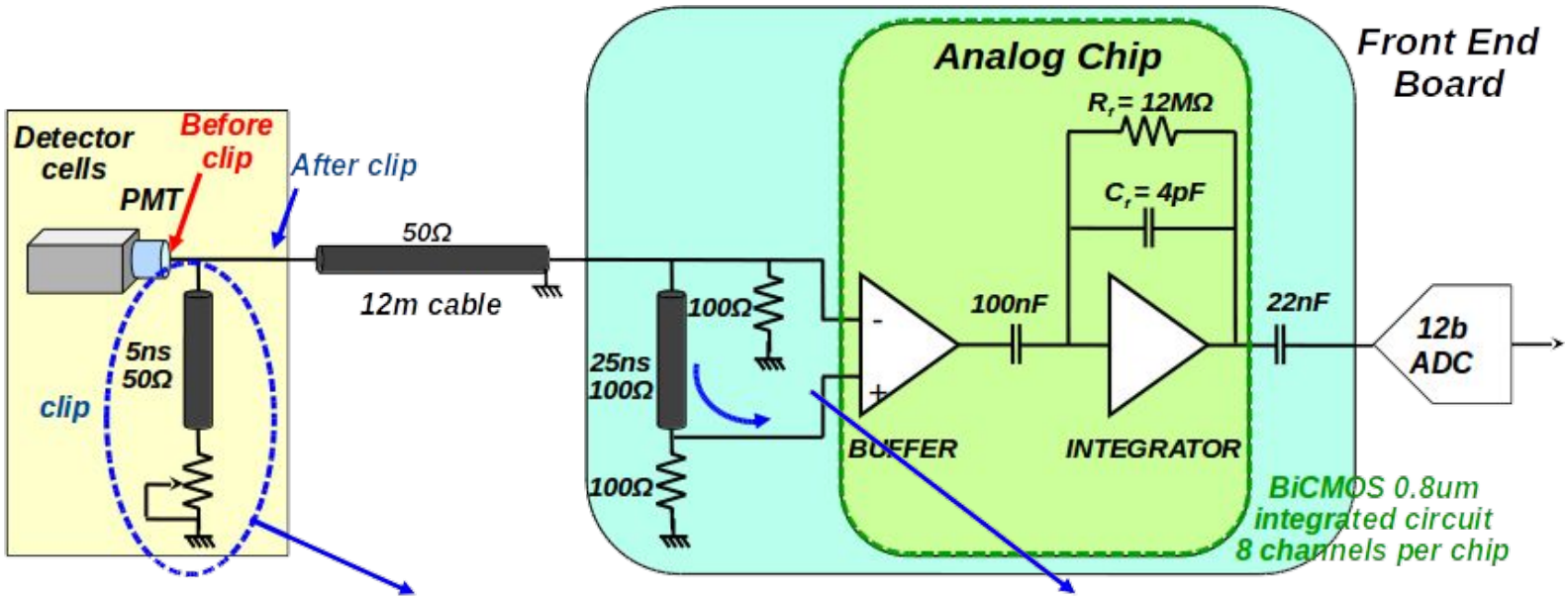

Specifications

- Pulse shaping in 25 ns
- Spill-over (residual signal) < 1% after 25ns
- Integrator plateau: 4ns
- Linearity < 1%
- Rise time ~5ns

Clipping

- Reduce signal tail
- Reduce spill over

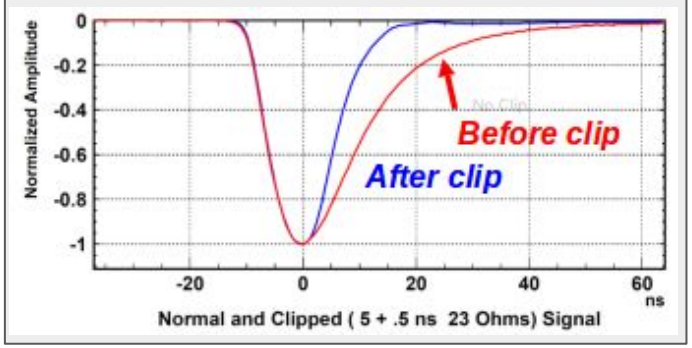

Integrator discharge

- Clipped signal
- Delayed negative clipped signal

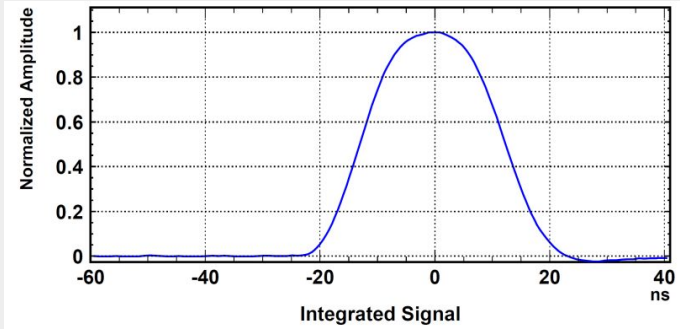

Electronics upgrade motivation

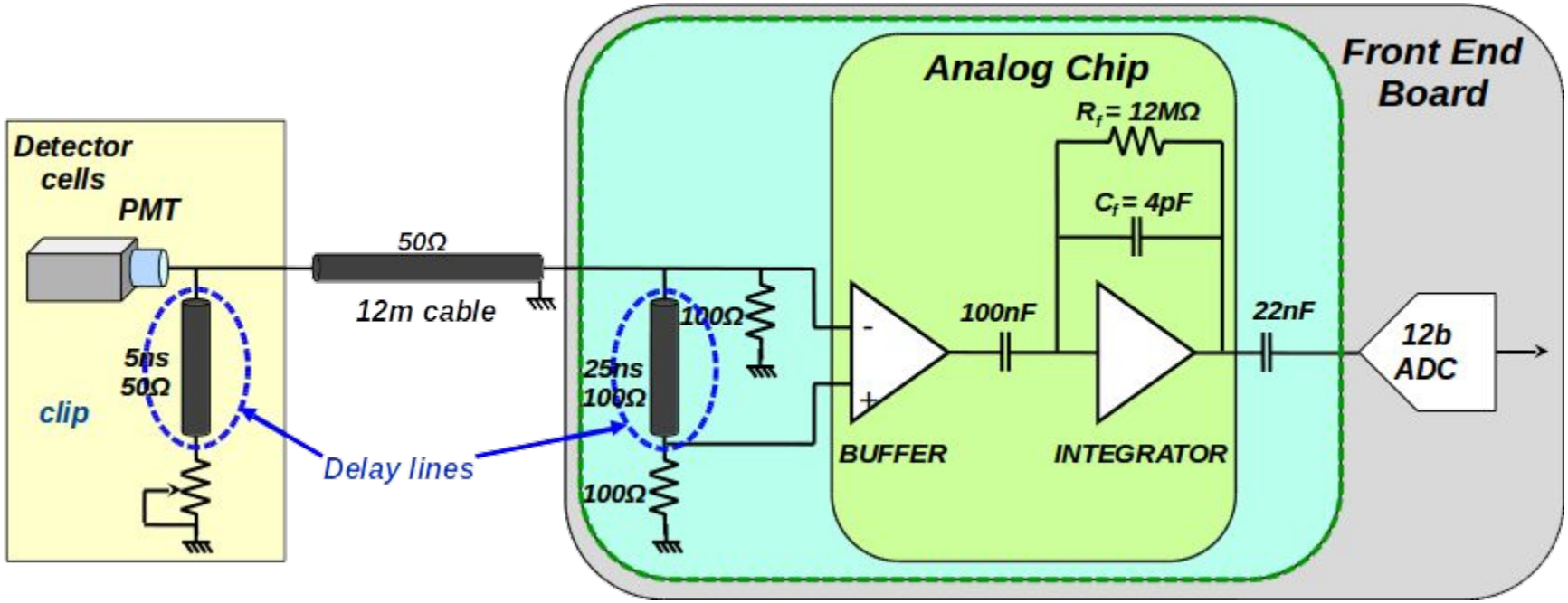

Reduction of PMT gain needed:

➔ FE electronics gain has to be increased...

➔ …but FE noise should not be increased in the process!

Proposed solution is to design a new ASIC: ICECAL chip

➔ Increased gain

➔ Reduced noise

➔ Integration/shaping

FEB processing @ 40 MHz

- Signals from 32 PMTs

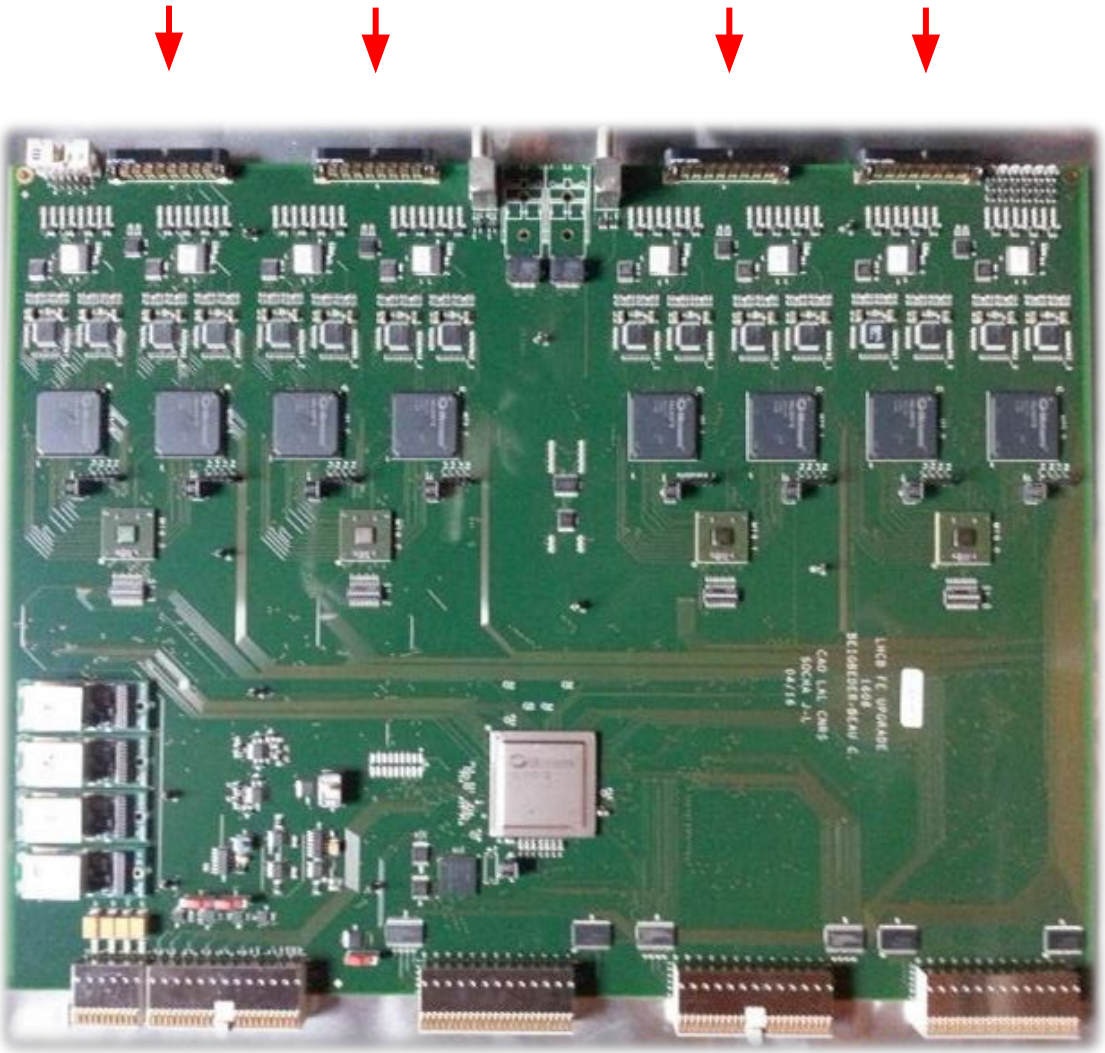

FEB processing @ 40 MHz

- Signals from 32 PMTs
- Shaping and integration of the analog signal on **ICECAL chip**

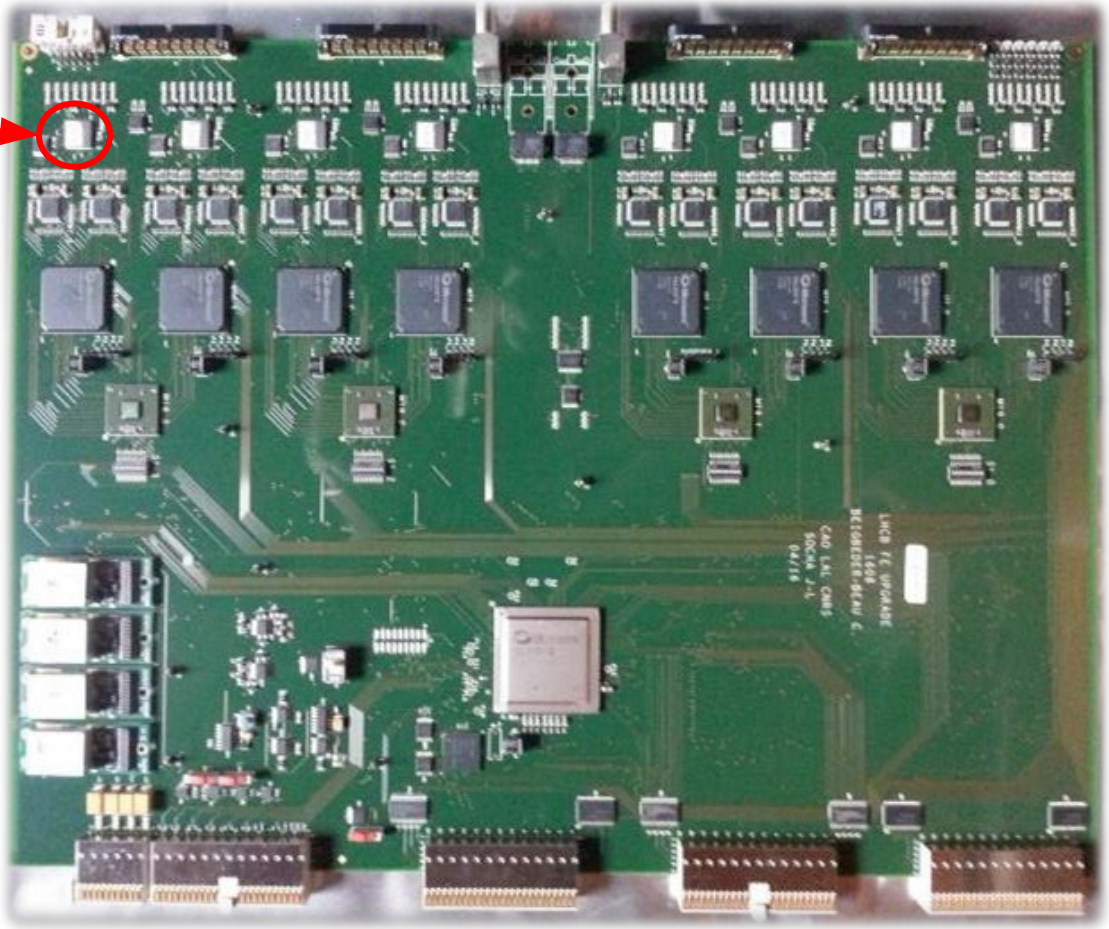

FEB processing @ 40 MHz

- Signals from 32 PMTs
- Shaping and integration of the analog signal on **ICECAL chip**
- 12-bit conversion on commercial ADCs

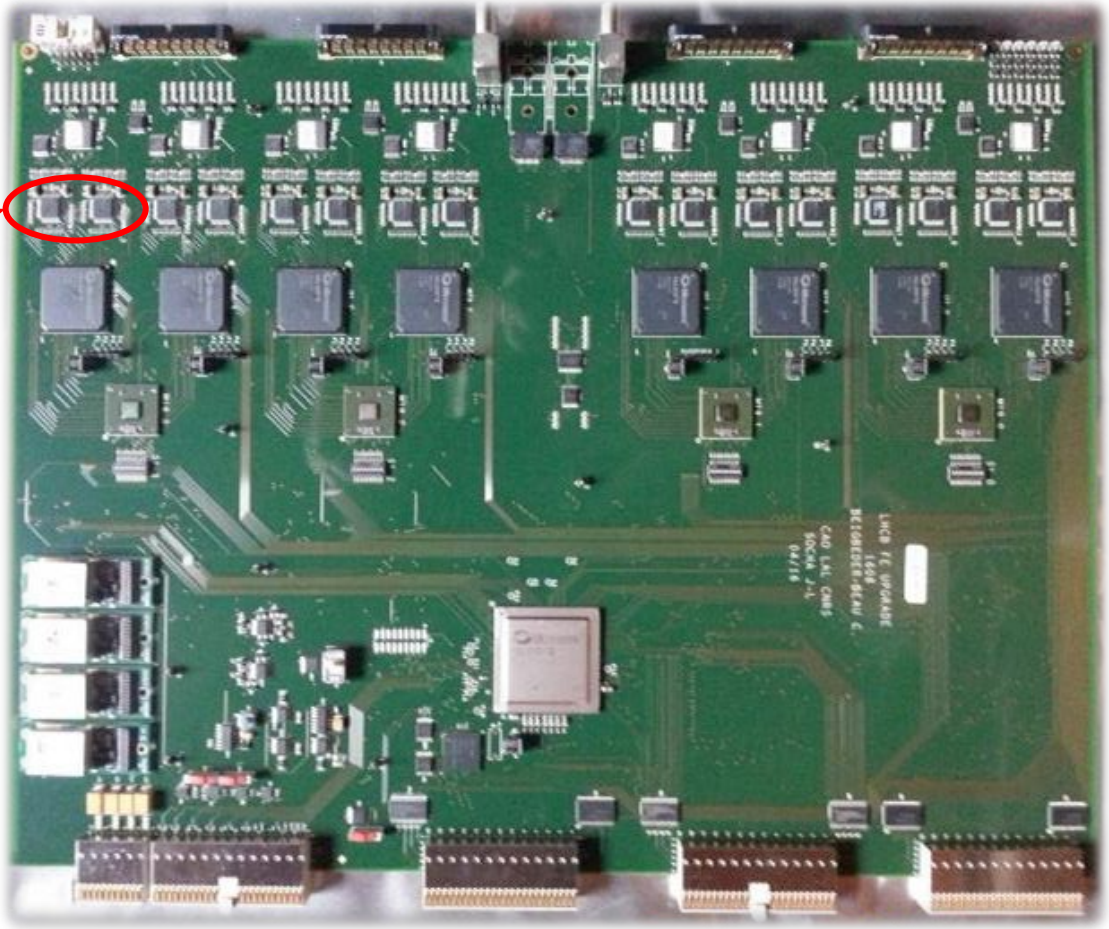

FEB processing @ 40 MHz

- Signals from 32 PMTs
- Shaping and integration of the analog signal on **ICECAL chip**
- 12-bit conversion on commercial ADCs
- Processing of signal in radiation tolerant FPGA-Microsemi (ACTEL) Igloo2 family:
  - ➢ Pedestal subtraction and low frequencies noise cancellation
  - ➢ Numerical correction and event formatting
  - ➢ LLT calculation

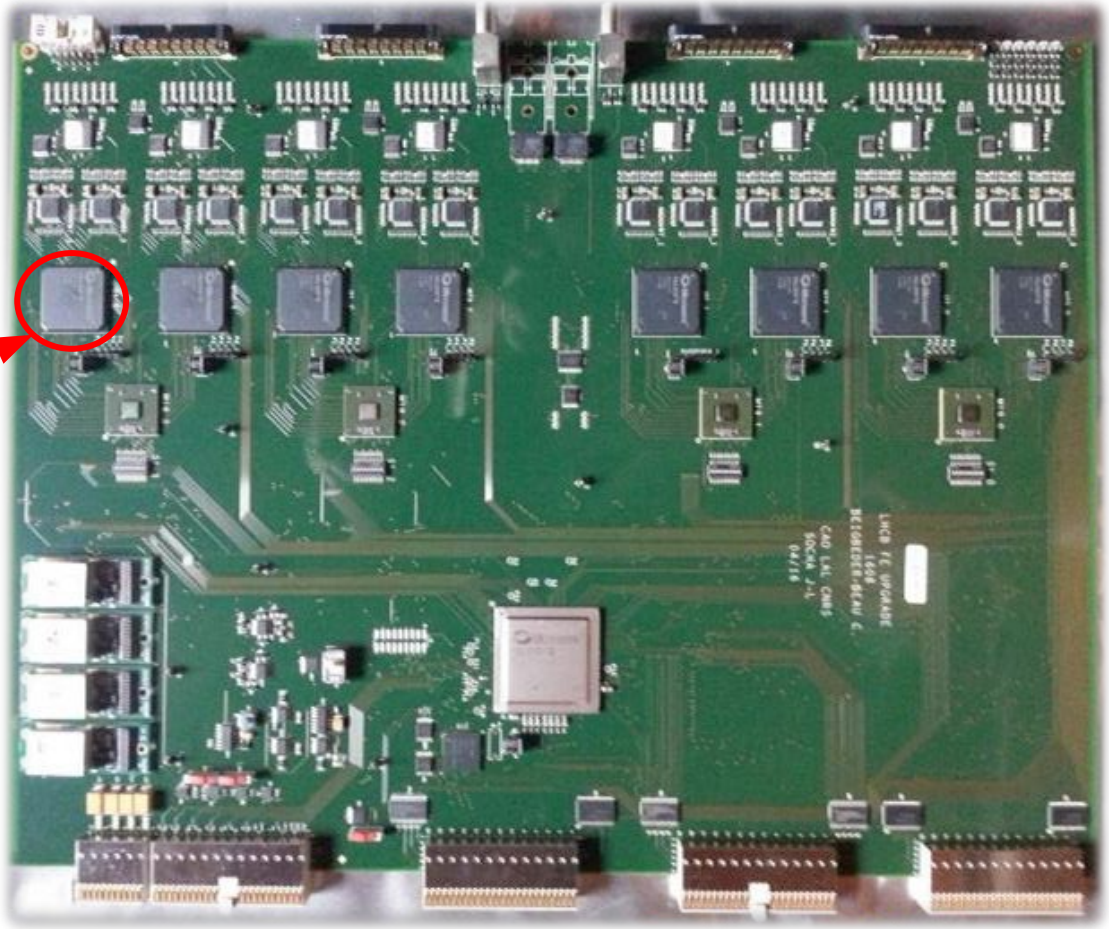

FEB processing @ 40 MHz

- Signals from 32 PMTs
- Shaping and integration of the analog signal on **ICECAL chip**
- 12-bit conversion on commercial ADCs
- Processing of signal in radiation tolerant FPGA-Microsemi (ACTEL) Igloo2 family:
  - ➢ Pedestal subtraction and low frequencies noise cancellation
  - ➢ Numerical correction and event formatting
  - ➢ LLT calculation
- Data transmission to neighbouring FEBs and to TELL40

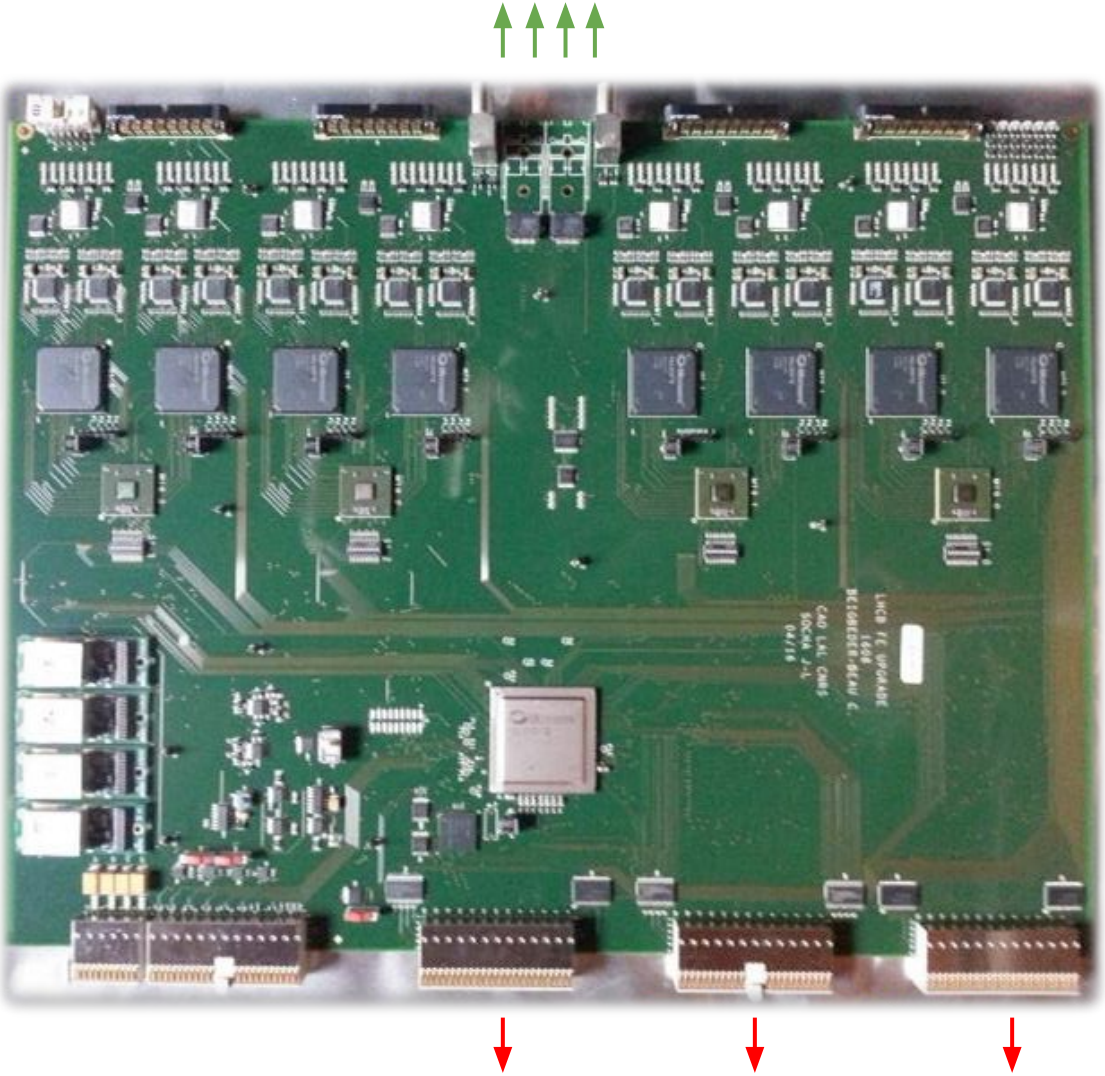

ICECAL chip architecture

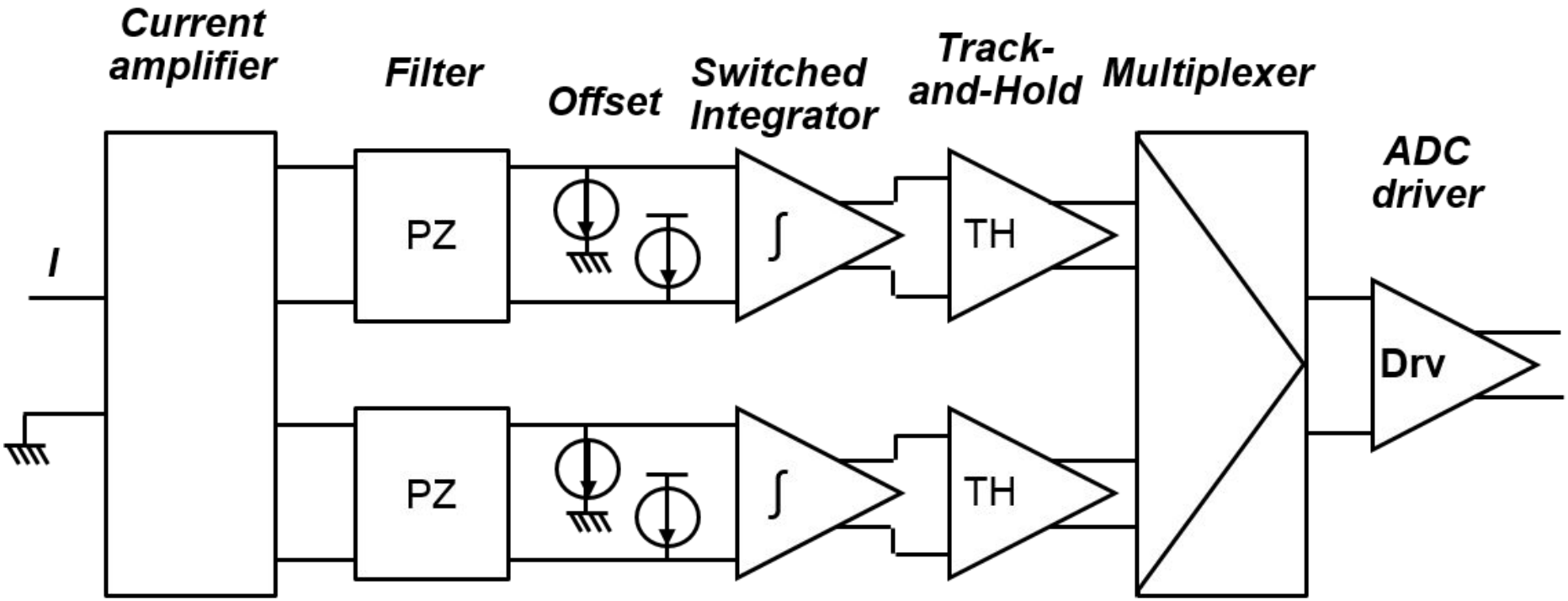

- Very difficult to integrate HQ delay lines → 2 switched alternate paths
- Switching noise → Fully differential
- Active termination at input to avoid resistor noise

ICECAL: how does it work?

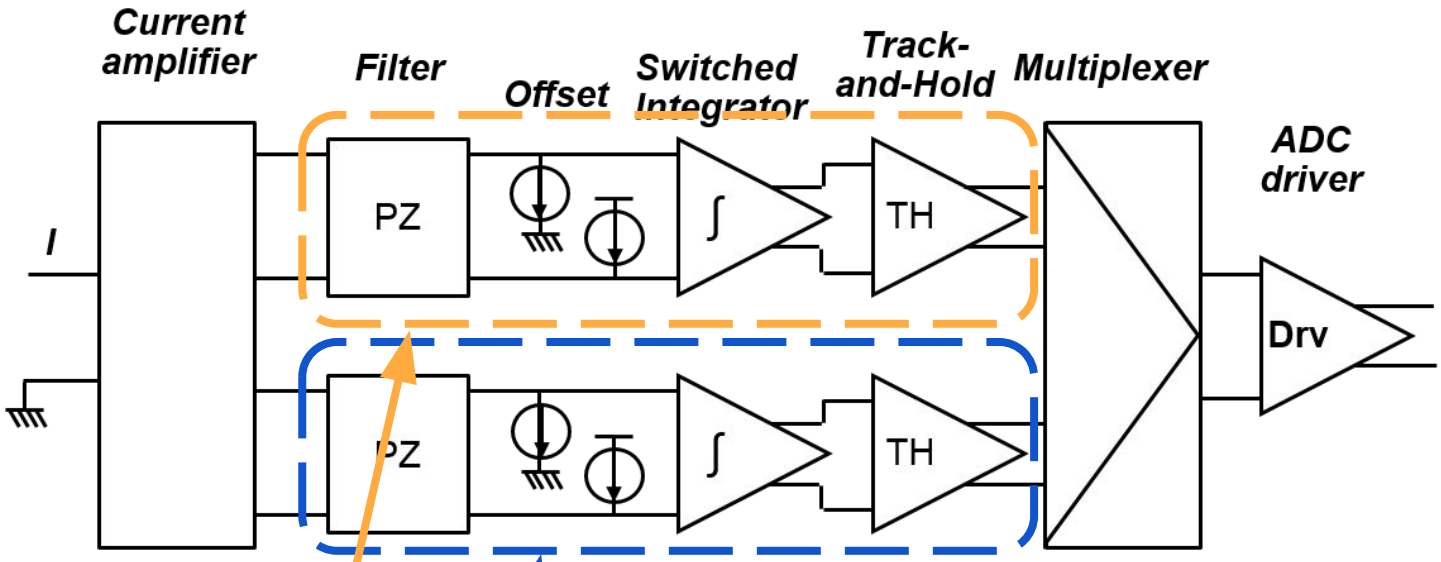

CLOCK INPUT

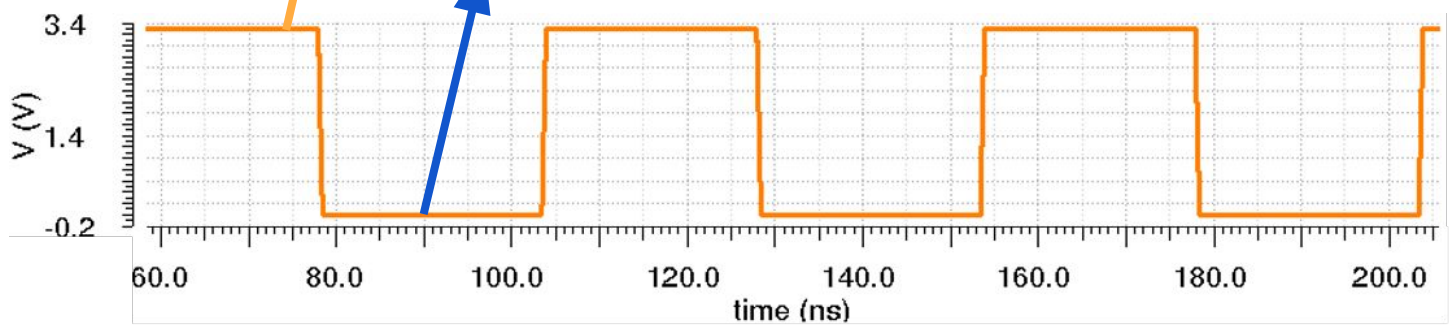

ICECAL: how does it work?

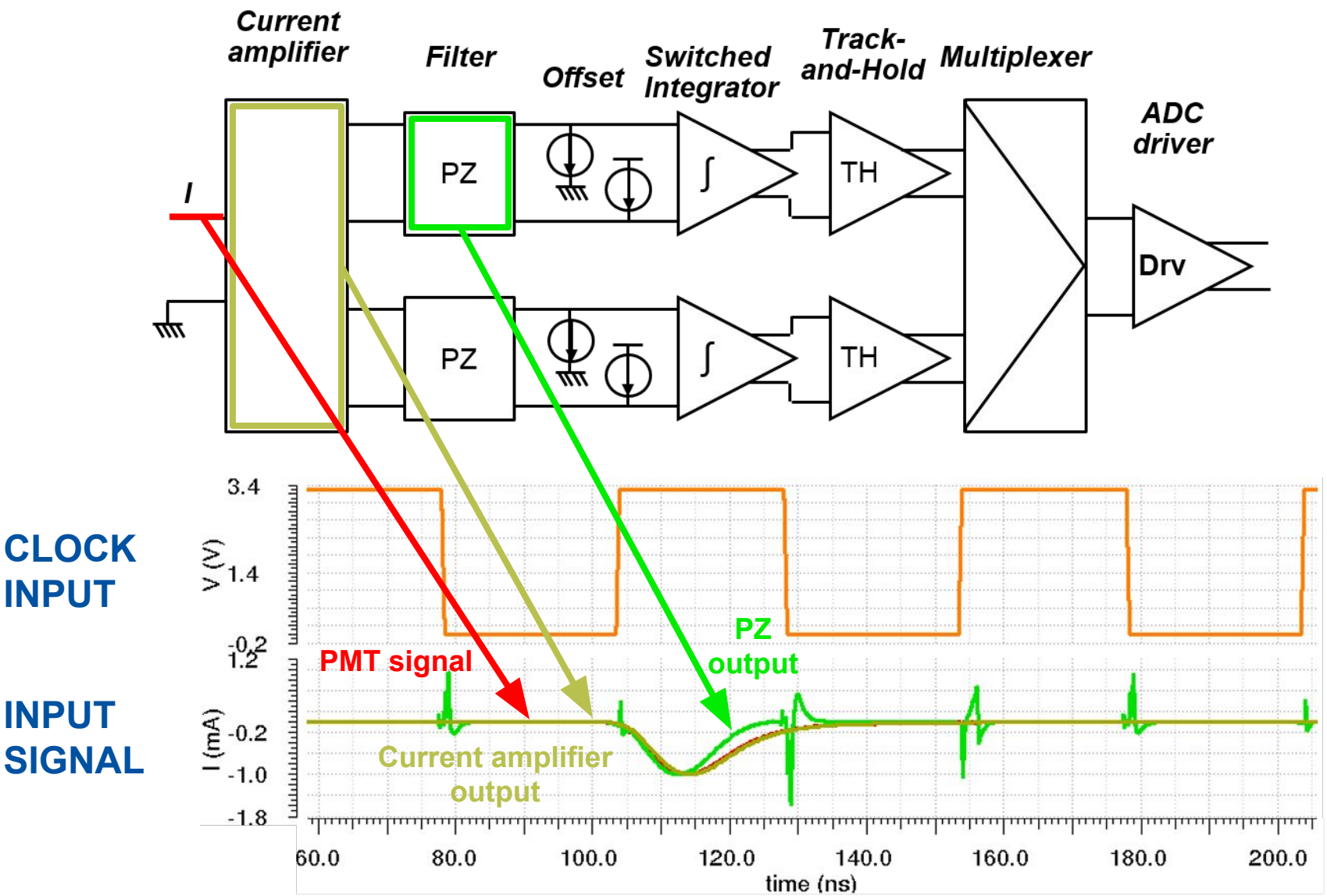

ICECAL: how does it work?

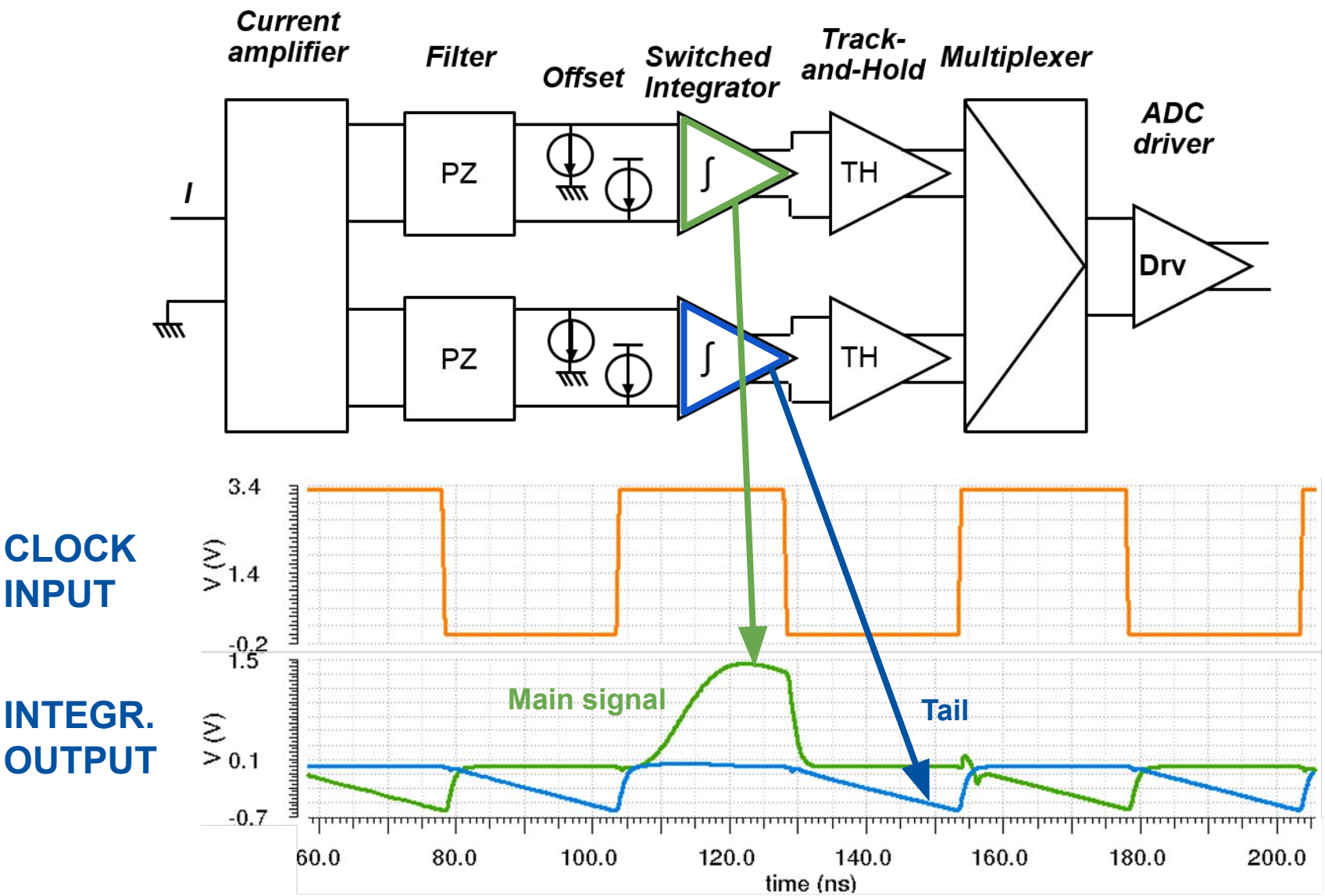

ICECAL: how does it work?

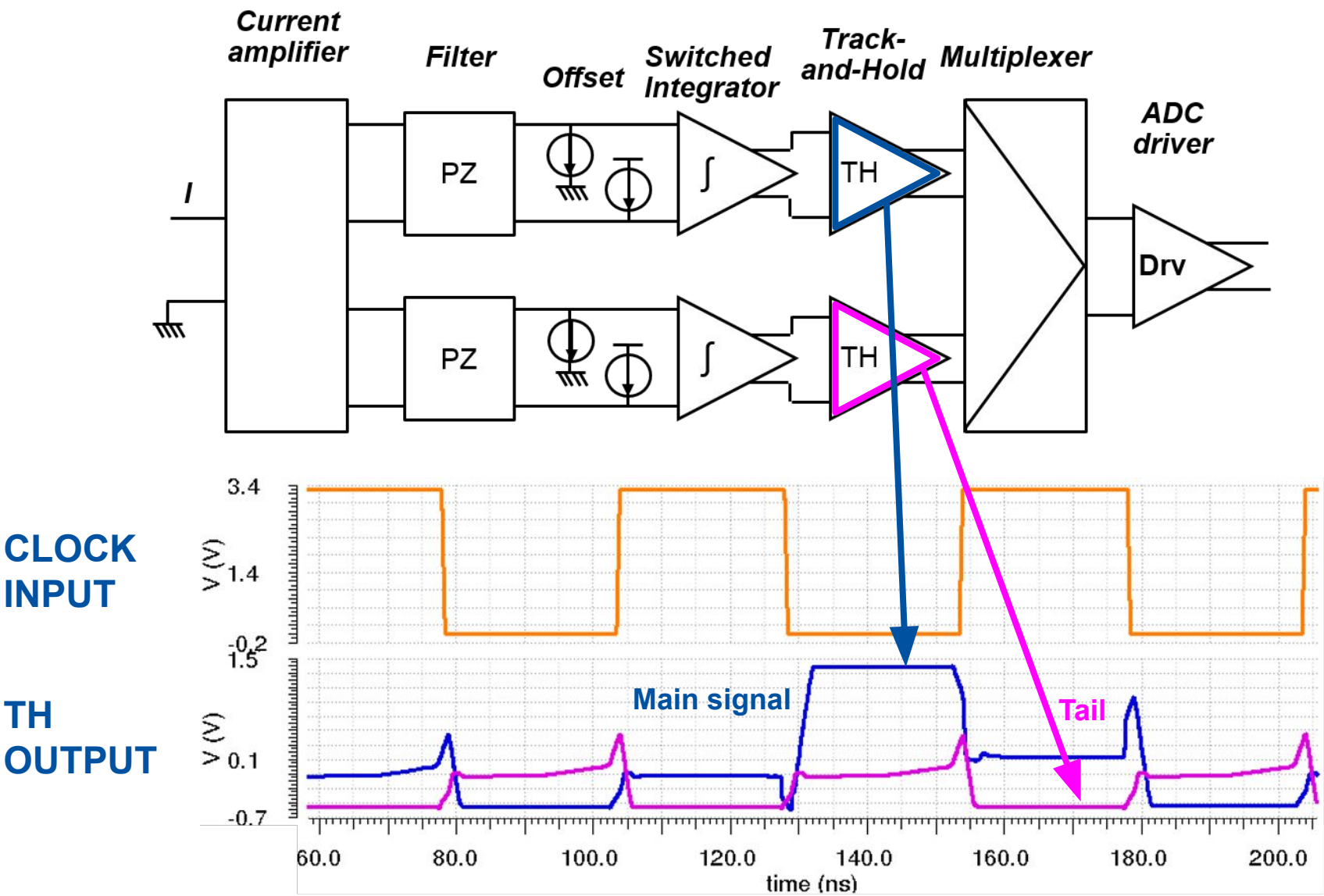

ICECAL: how does it work?

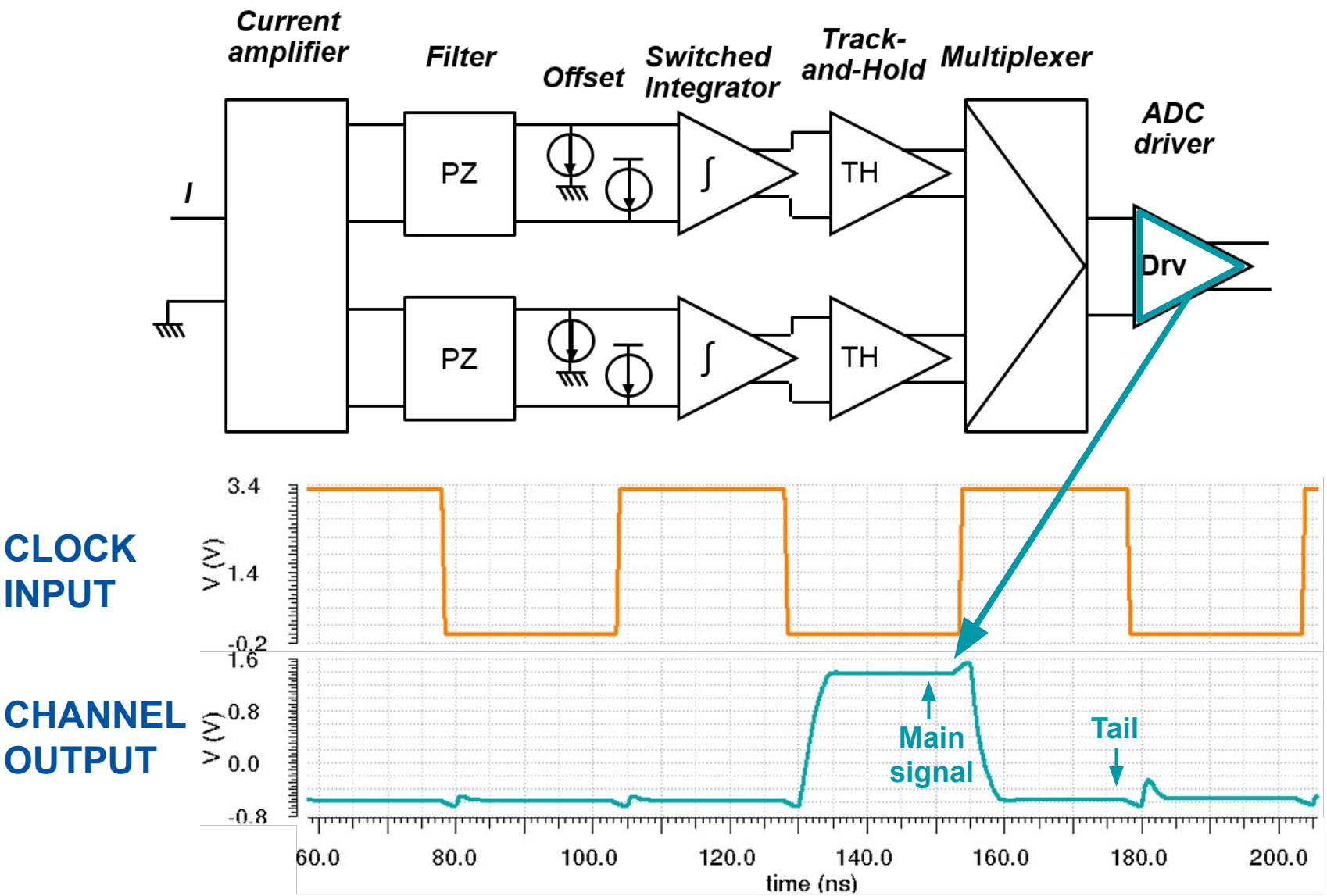

ICECAL ASIC

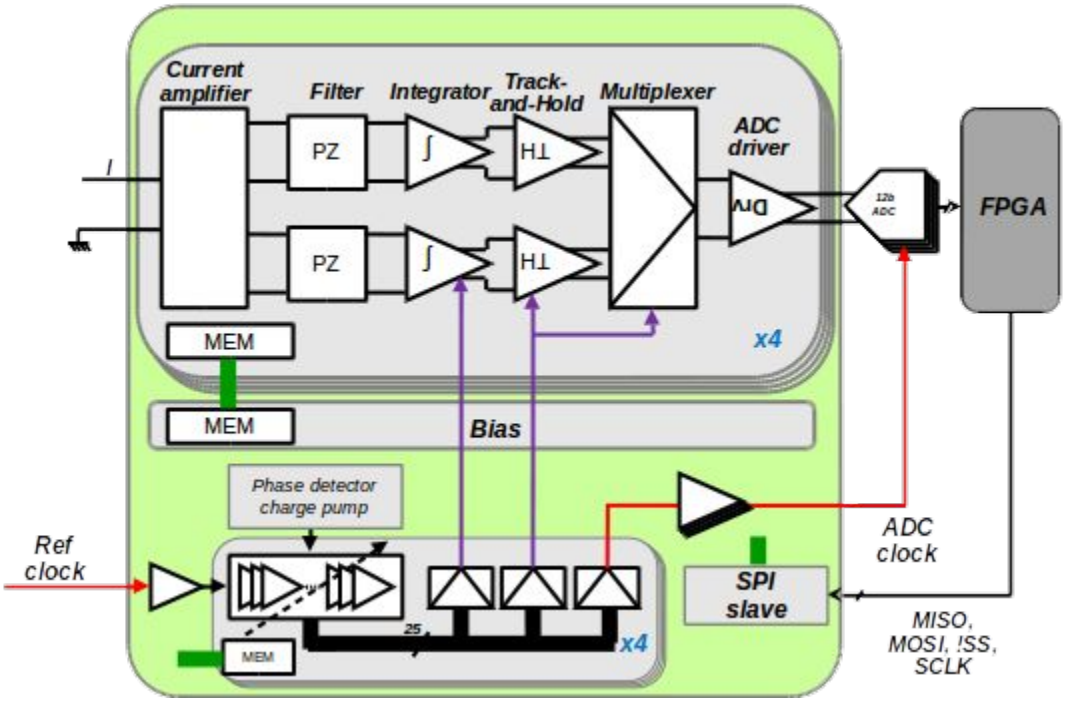

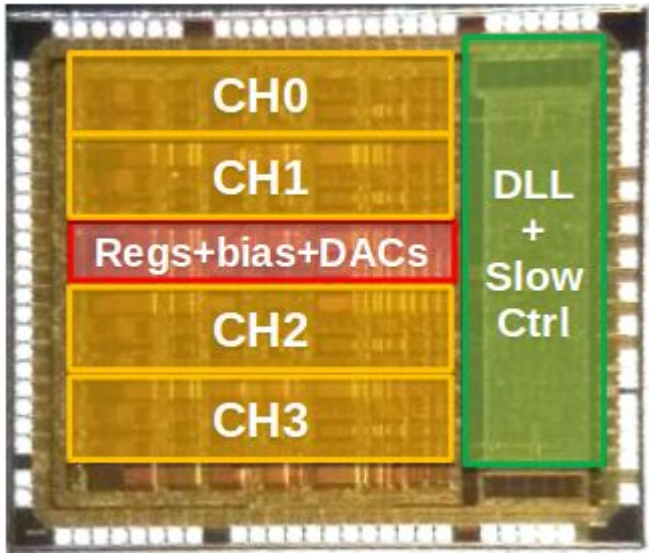

- ➔ Complete 4 analog channels
- ➔ 4 DLL synchronization
- ➔ Slow control registers (SPI interface)
- ➔ Tunable parameters

ICECAL ASIC tests: non-linearity

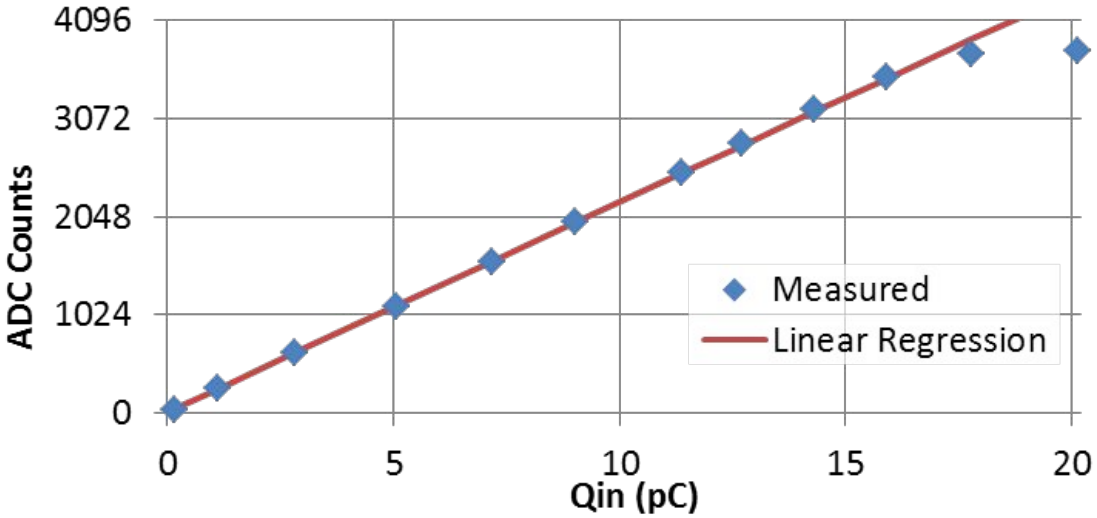

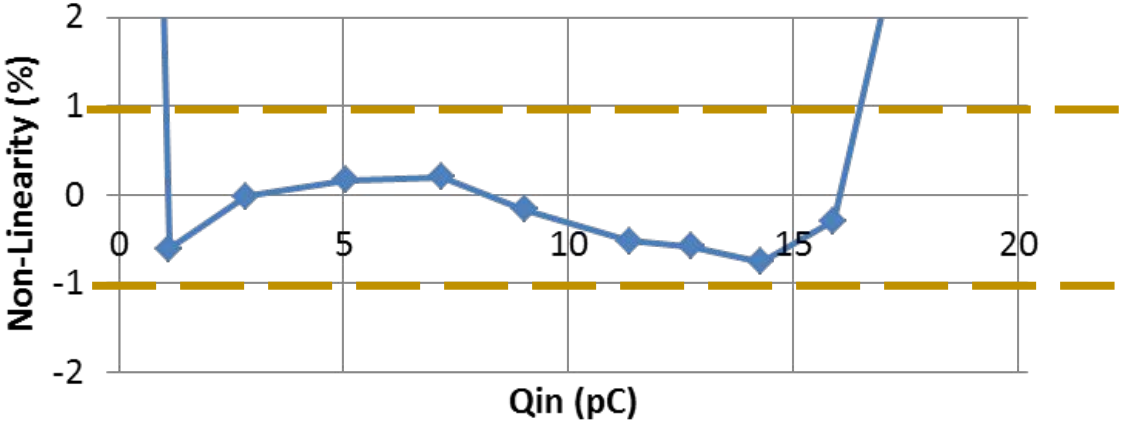

Non linearity < 1%

ICECAL ASIC tests: Spill-Over

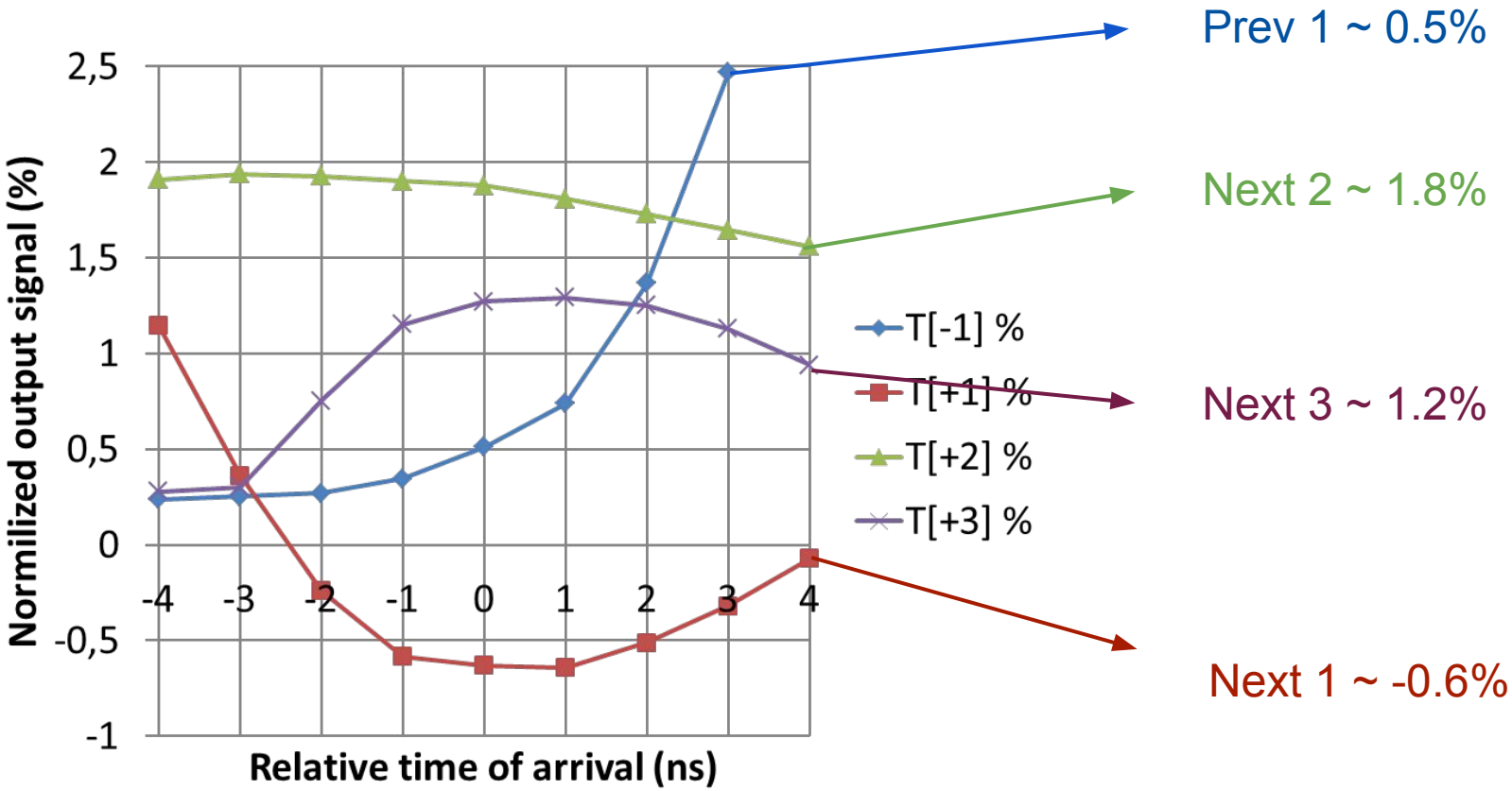

ICECAL ASIC tests: Plateau

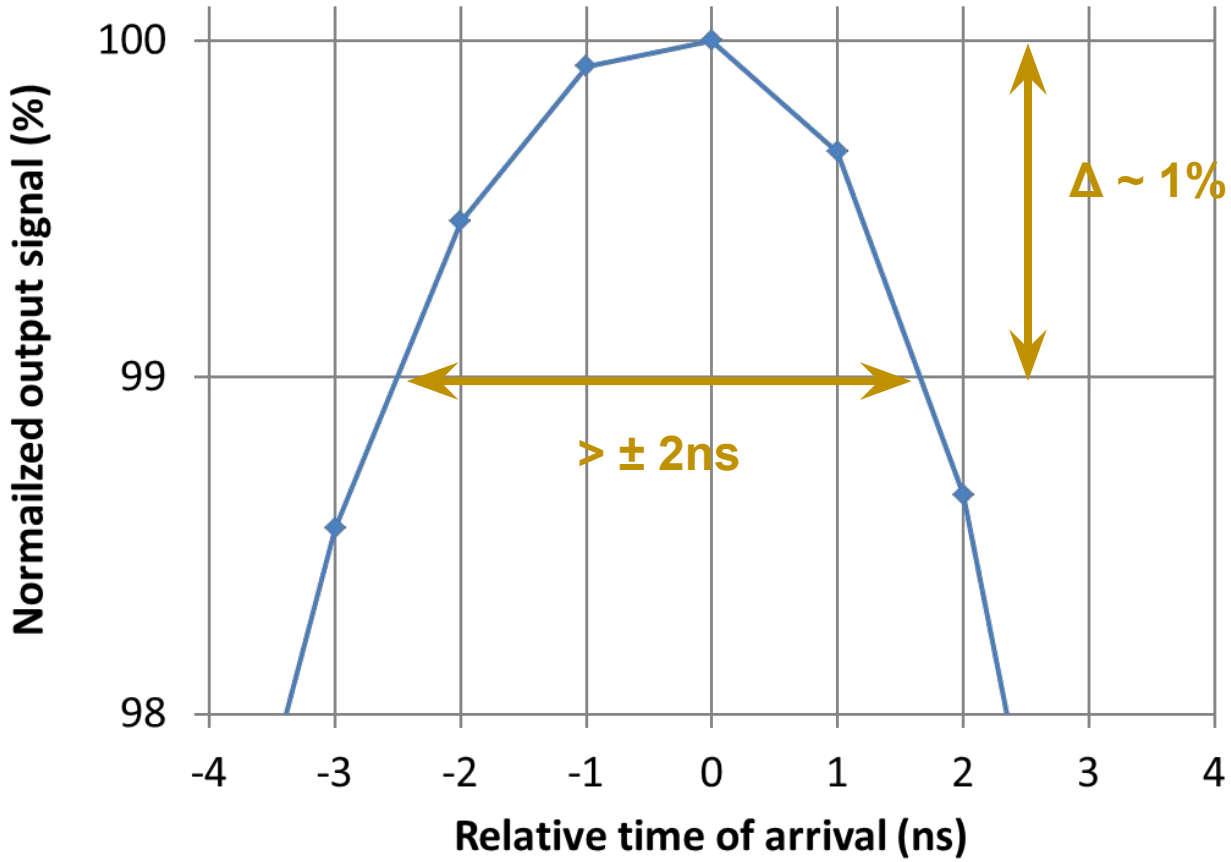

ICECAL ASIC tests: Noise

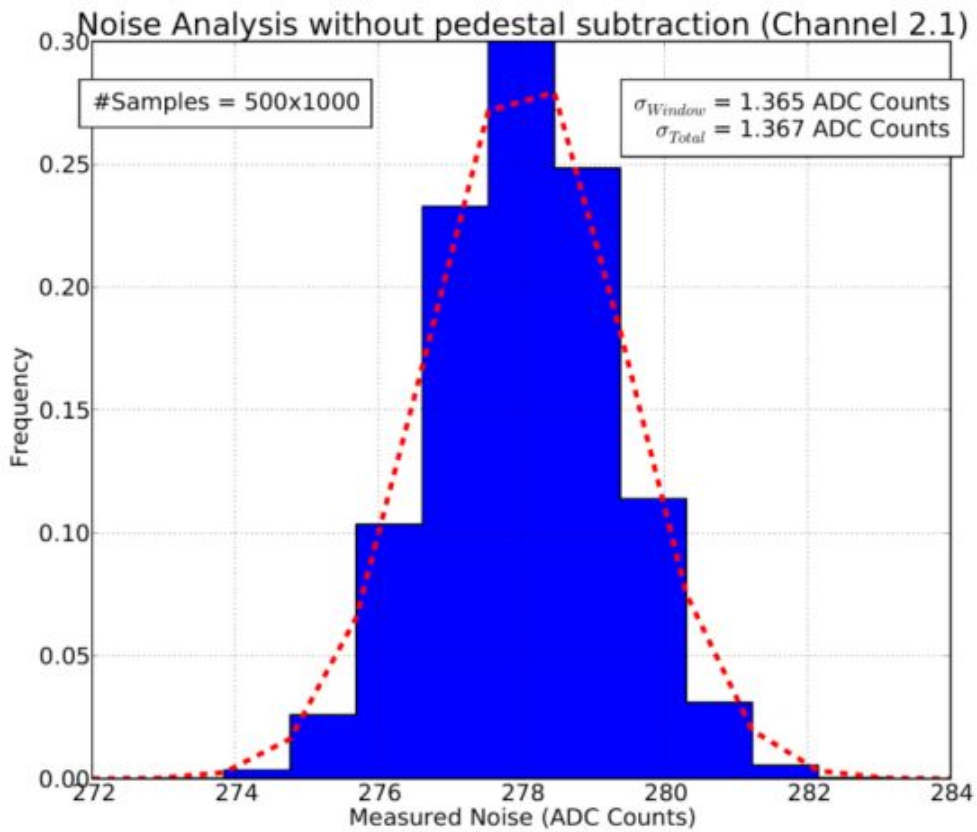

Noise = 1.1 LSB

Noise after pedestal subtraction = 1.3 LSB

ICECAL ASIC: Radiation hardness

Electronics radiation levels expected exposure:

- ➔ Dose: < 100 rad/fb^{-1} (5 krad for 50 fb^{-1})
- ➔ High energy hadrons: 4.2 x 10^{10} parts/cm^2
- ➔ Neutrons: 2.55 x 10^{12} parts/cm^2

TID tests:

- ➔ Use beam of 61 MeV protons
- ➔ Dose up to 55 krad on 4 chips
- ➔ Results:
  - ➢ No SEU or SEL was detected
  - ➢ No relevant variation on the chips characteristics

SEE tests:

- ➔ Irradiate with heavy ions: $^{58}Ni^{+18}$
  - ➢ LET = 20.4 MeV/mg/cm^2
- ➔ Two chips were irradiated: no SEU detected
- ➔ Equivalent expected limits for all channels in detector lifetime: 1.3 SEU and 0.9 SEL.

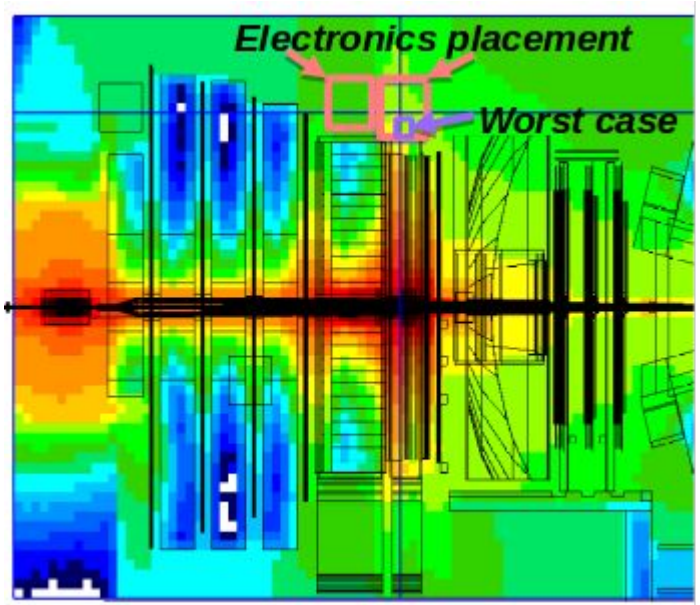

ICECAL ASIC: Production and test

FE production requirements

- ➔ FE production: 310 boards
  - ➢ ECAL+HCAL: 246 boards
  - ➢ + ~15% contingency
- ➔ Required chips: 2480

Production

- ➔ 3167 pieces

Quality control passed

- ➔ 2894/3167 pieces (91.4%)

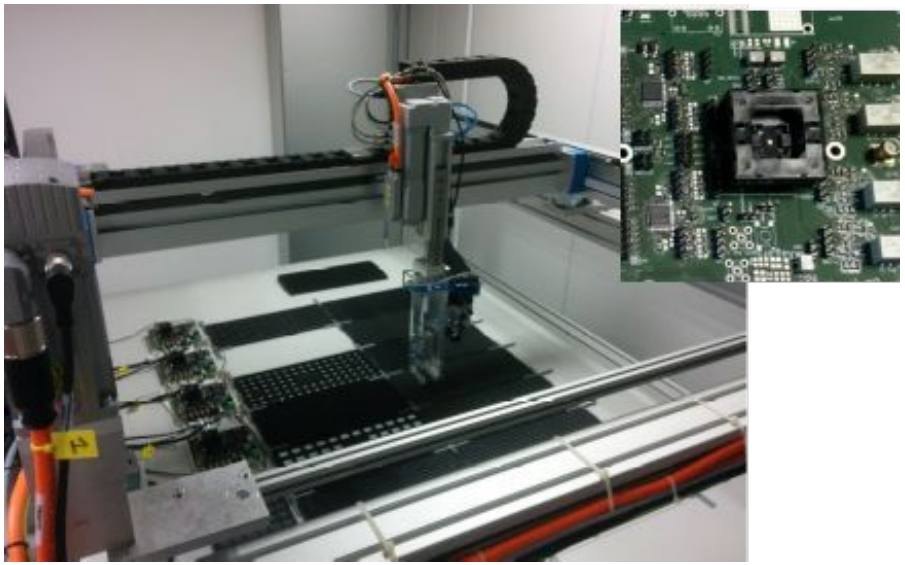

- ➔ Motorized horizontal gantry system to move the chips from tray to the test PCB and to final tray.
- ➔ Motorized stage in the vertical direction.
- ➔ Pneumatic suction
- ➔ Pressure sensor

Conclusions

Major upgrade of LHCb detector for next data taking period of LHC, in 2021

- ➔ Removal of L0 HW trigger, switch to full software trigger running at 40 MHz
- ➔ Reduction of PMTs gain by a factor 5

The Calorimeter system of LHCb is part of the upgrade

- ➔ Replacement of electronics of ECAL and HCAL to send full data flow to counting room @ 40 MHz
- ➔ Partial compensation of PMTs gain in electronics necessary, but without increasing noise in the process

New Front End Boards developed

- ➔ Shaping and integration via customly designed ICECAL ASIC
- ➔ FPGA for pedestal sub., noise cancellation, numerical correction, event formatting, LLT calculation

Design and testing of analog circuit has been shown to fulfill the requirements

- ➔ Non linearity < 1%
- ➔ Very limited spill-over
- ➔ Low noise, around 1.3 LSB (corresponding to ~7 MeV)
- ➔ Excellent results in terms of radiation hardness

Acknowledgements

Thank you for your attention!

CHEF 2019

Calorimetry for the High Energy Frontier

25 - 29 November 2019, Fukuoka

backup

Non-linearity