CHEF2019
Calorimetry for the High Energy Frontier
Fukuoka

CMS ECAL upgrade for precision timing and energy measurements at the High-Luminosity LHC

Riccardo Salvatico[1]

On behalf of the CMS Collaboration

[1] University of Torino, Italy, and INFN

The CMS Electromagnetic Calorimeter

ECAL is a homogeneous, high-granularity calorimeter

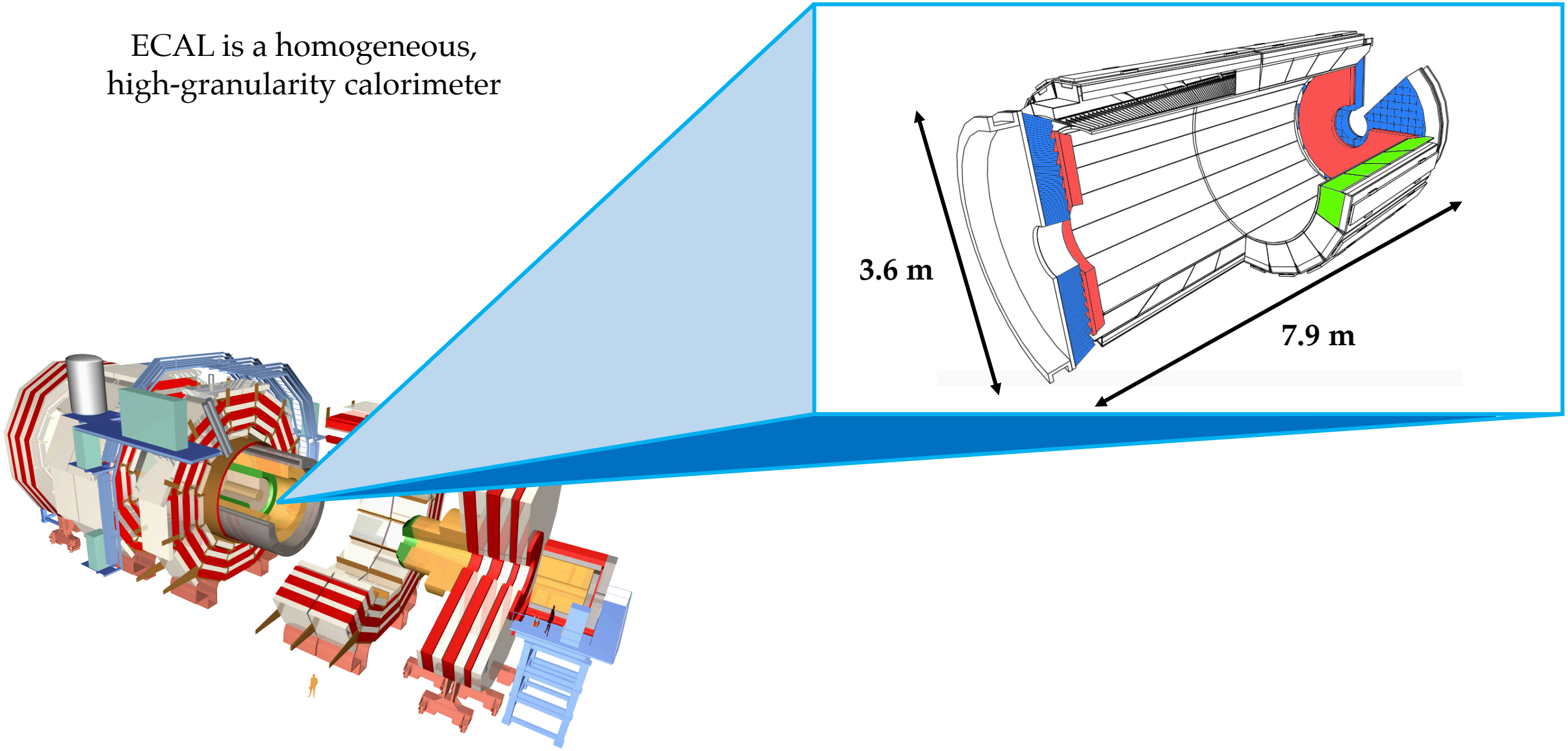

The CMS Electromagnetic Calorimeter

Lead tungstate ($PbWO_4$) crystals
(~61k EB, ~14k EE)

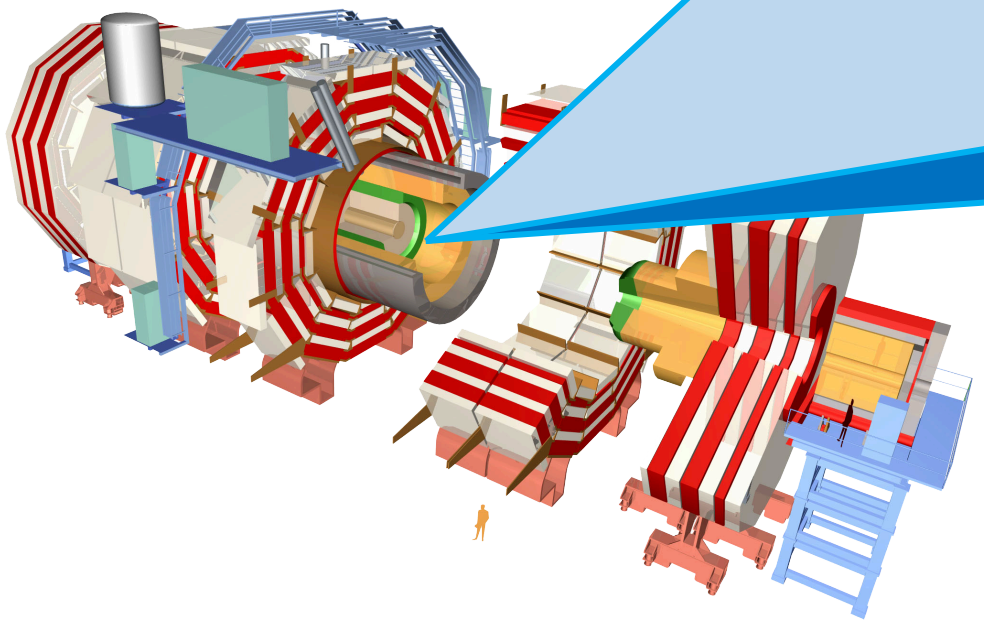

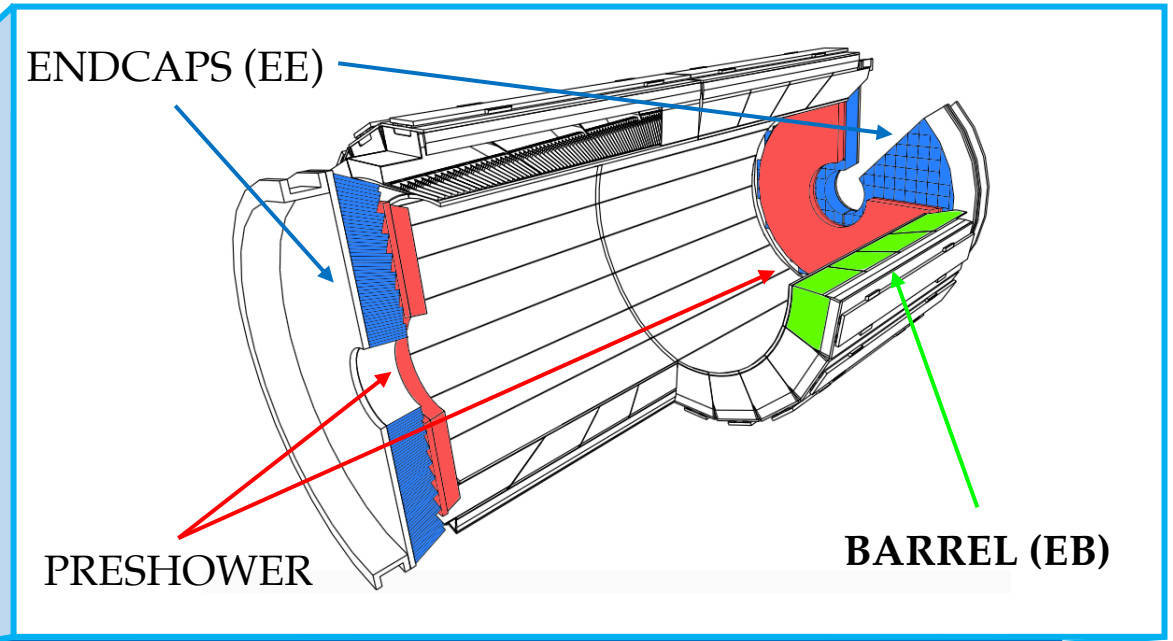

In the central barrel:

- 2x2x23 cm size
- $X_0 = 0.89$ cm
- $r_M = 2.19$ cm
- $\rho = 8.28\ g/cm^3$
- $t_{75\%} = 25$ ns
- APD photosensors

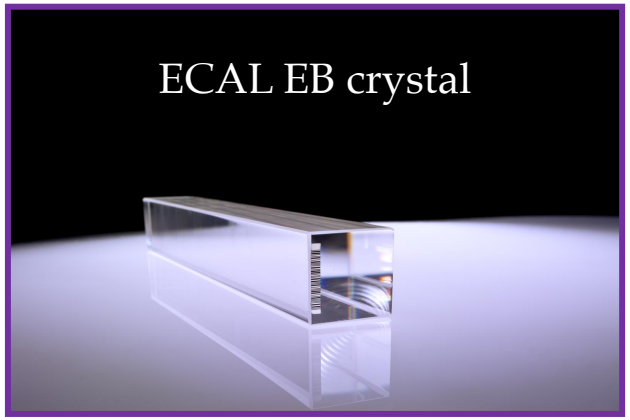

Current ECAL performance

Excellent energy resolution

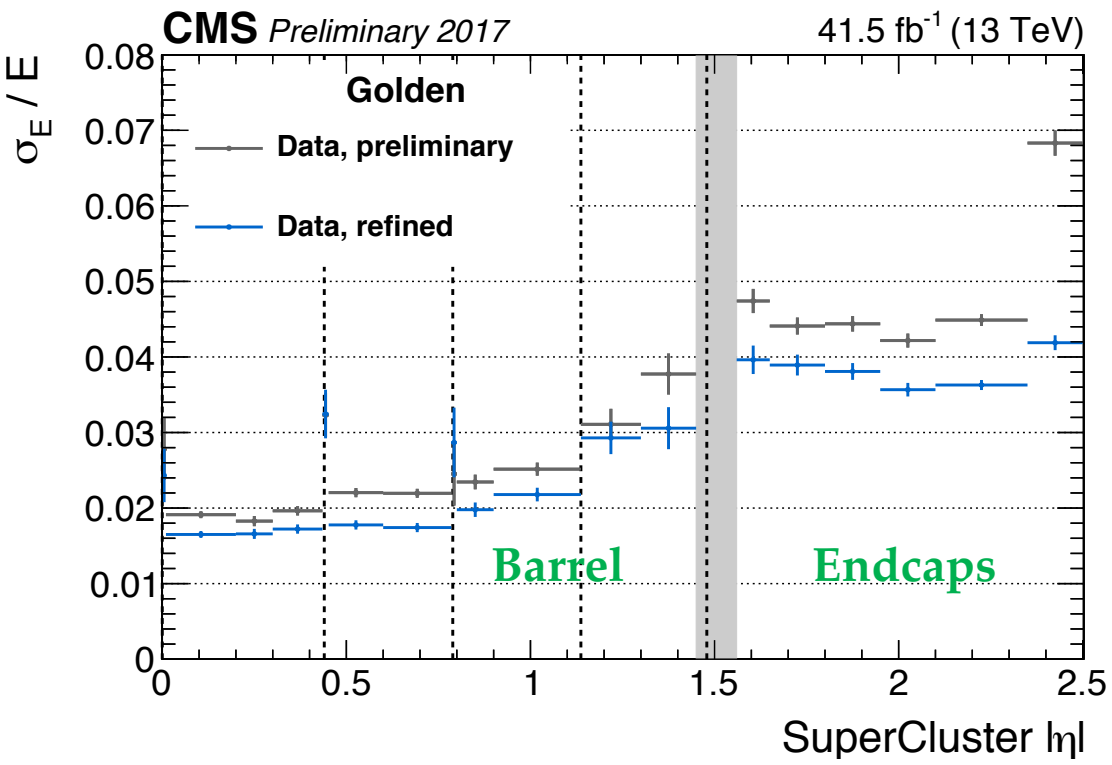

Electrons from Z → *ee* decays

Good time resolution

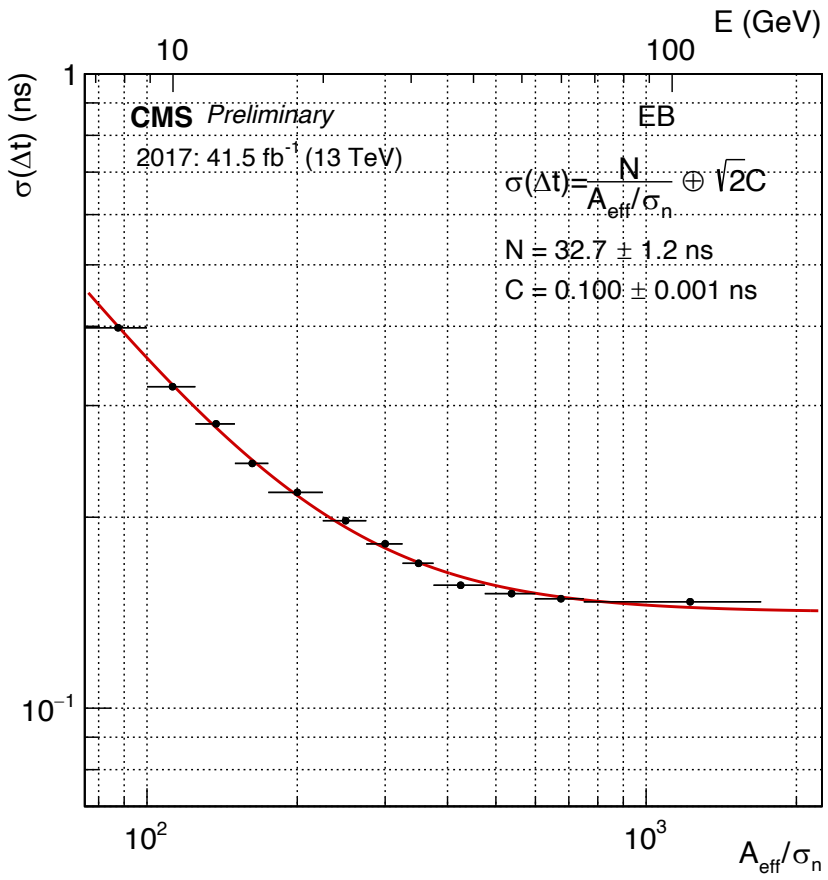

Time difference of the two most energetic crystals of an ECAL cluster

CMS physics program and ECAL

ECAL has a crucial role in the CMS physics program

$H \to \gamma\gamma$

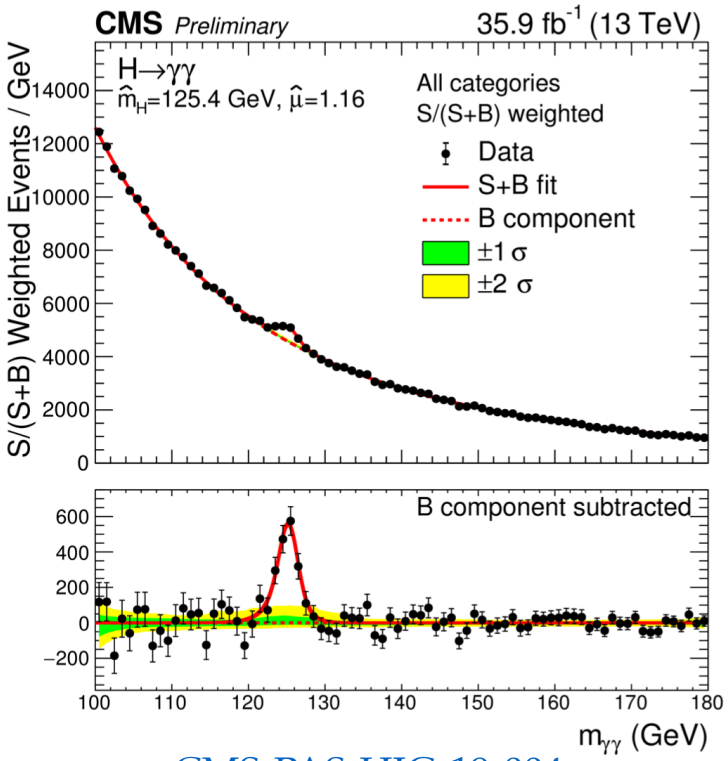

CMS-PAS-HIG-19-004

- γγ mass resolution < 1%
- γ energy scale well known (< 0.1% level)

$H \to ZZ \to 4l$

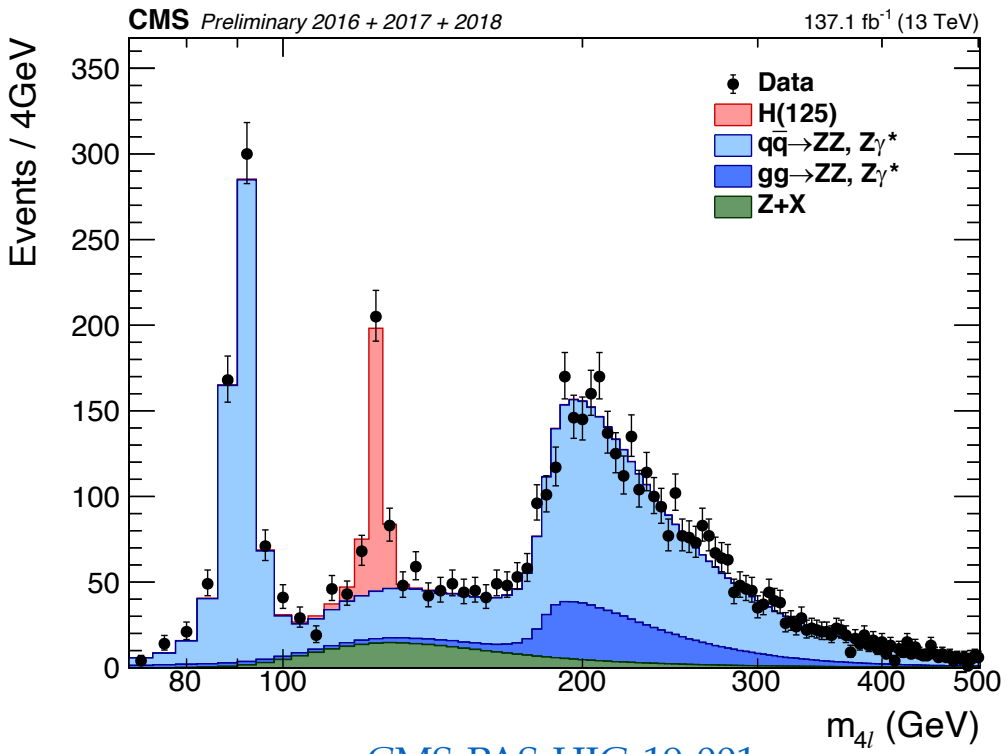

CMS-PAS-HIG-19-001

After contributing to the Higgs boson discovery in 2012, ECAL continues to be vital for **Higgs precision measurements** and for a vast number of **searches for rare Standard Model or beyond SM phenomena**

CMS and ECAL at HL-LHC (after 2026)

HL-LHC: enrich the LHC physics program (Higgs couplings at % level, HH, searches for NP)

Machine conditions

	LHC	HL-LHC (ultimate)
$\mathcal{L}_{inst}$ ($\mathrm{cm^{-2}s^{-1}}$)	2×10^{34}	$5\ (7.5) \times 10^{34}$
PU ($\mathrm{n_{vtxs}}$)	$40 - 60$	$140\ (200)$
$\mathcal{L}_{int}$ ($\mathrm{fb^{-1}}$)	~ 300	~ 3000

CMS and ECAL at HL-LHC (after 2026)

HL-LHC: enrich the LHC physics program (Higgs couplings at % level, HH, searches for NP)

Machine conditions

	LHC	HL-LHC (ultimate)
$\mathcal{L}_{inst}$ ($cm^{-2}s^{-1}$)	2×10^{34}	$5\ (7.5) \times 10^{34}$
PU (n_{vtxs})	$40 - 60$	140 (200)
$\mathcal{L}_{int}$ (fb^{-1})	~ 300	~ 3000

CMS and ECAL at HL-LHC (after 2026)

HL-LHC: enrich the LHC physics program (Higgs couplings at % level, HH, searches for NP)

Machine conditions

	LHC	HL-LHC (ultimate)
$\mathcal{L}_{inst}$ ($cm^{-2}s^{-1}$)	2×10^{34}	$5\ (7.5) \times 10^{34}$
PU (n_{vtxs})	$40 - 60$	140 (200)
$\mathcal{L}_{int}$ (fb^{-1})	~ 300	~ 3000

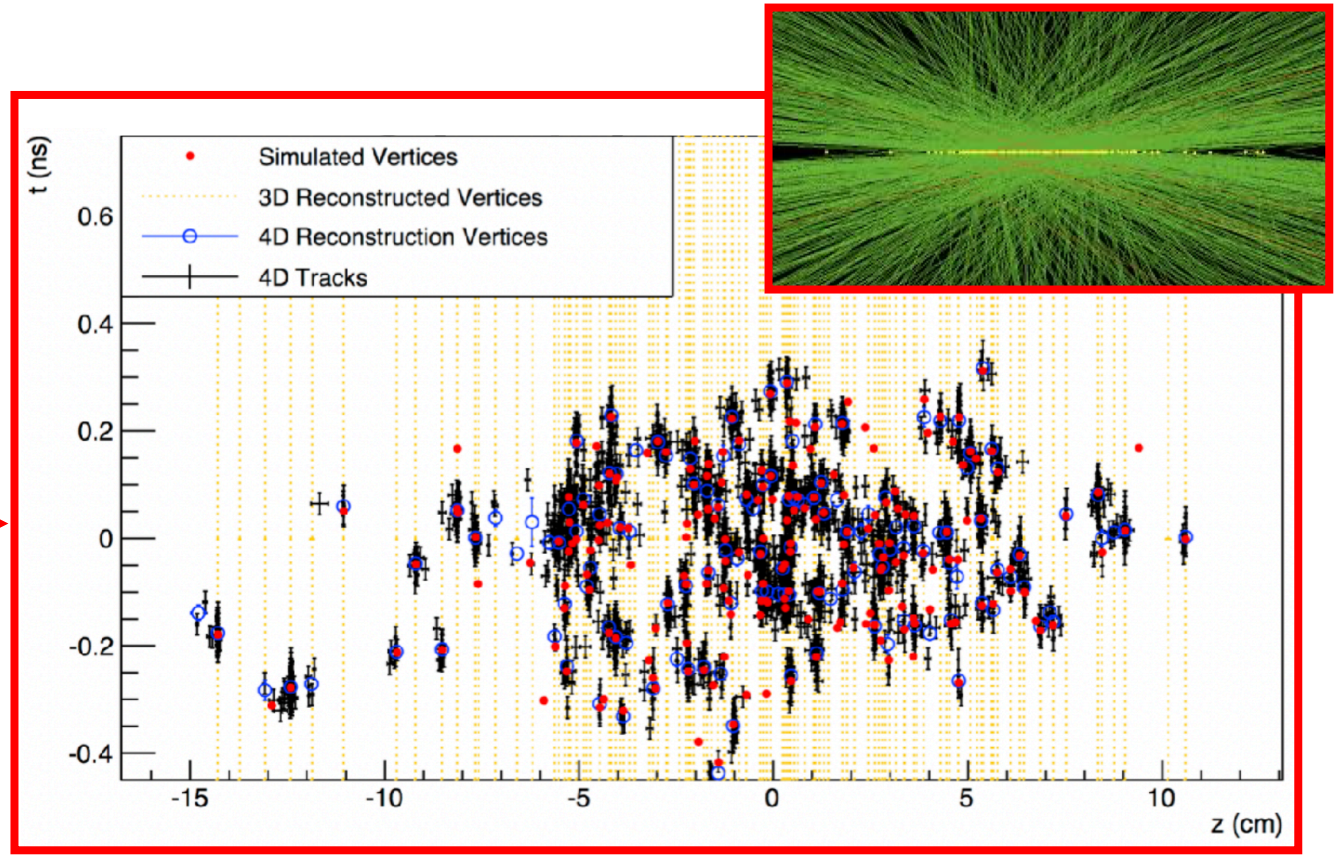

Vertex location, possible with a time resolution < 30 ps, will be essential

CMS and ECAL at HL-LHC (after 2026)

HL-LHC: enrich the LHC physics program (Higgs couplings at % level, HH, searches for NP)

Expected 10-fold increase in total integrated luminosity

⇒ High radiation dose

Machine conditions

	LHC	HL-LHC (ultimate)
$\mathcal{L}_{inst}$ ($cm^{-2}s^{-1}$)	2×10^{34}	$5\ (7.5) \times 10^{34}$
PU (n_{vtxs})	$40 - 60$	140 (200)
$\mathcal{L}_{int}$ (fb^{-1})	~ 300	~ 3000

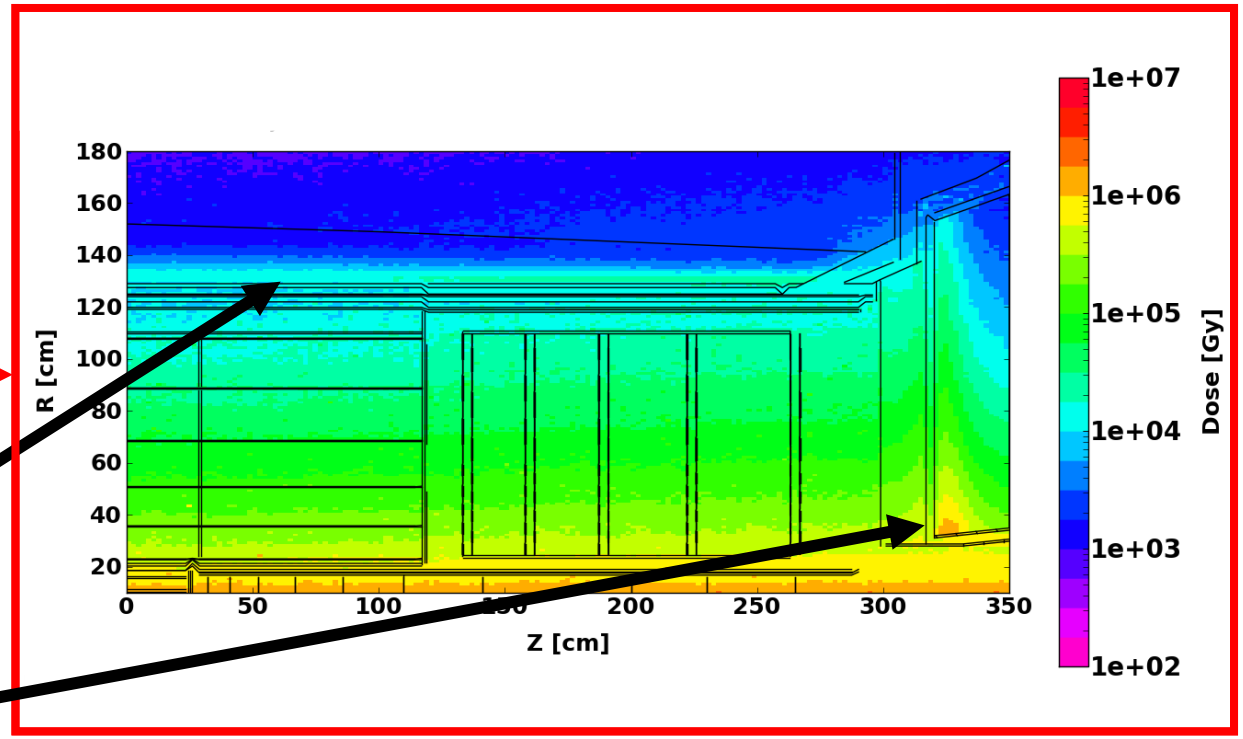

EB up to ~50 kGy

EE up to ~10^3 kGy

CMS and ECAL at HL-LHC (after 2026)

HL-LHC: enrich the LHC physics program (Higgs couplings at % level, HH, searches for NP)

Radiation-induced leakage current in the APD would make APD noise the dominant term in energy resolution at HL-LHC, in the current configuration

Machine conditions

	LHC	HL-LHC (ultimate)
$\mathcal{L}_{inst}$ ($cm^{-2}s^{-1}$)	2×10^{34}	$5\ (7.5) \times 10^{34}$
PU (n_{vtxs})	$40 - 60$	140 (200)
$\mathcal{L}_{int}$ (fb^{-1})	~ 300	~ 3000

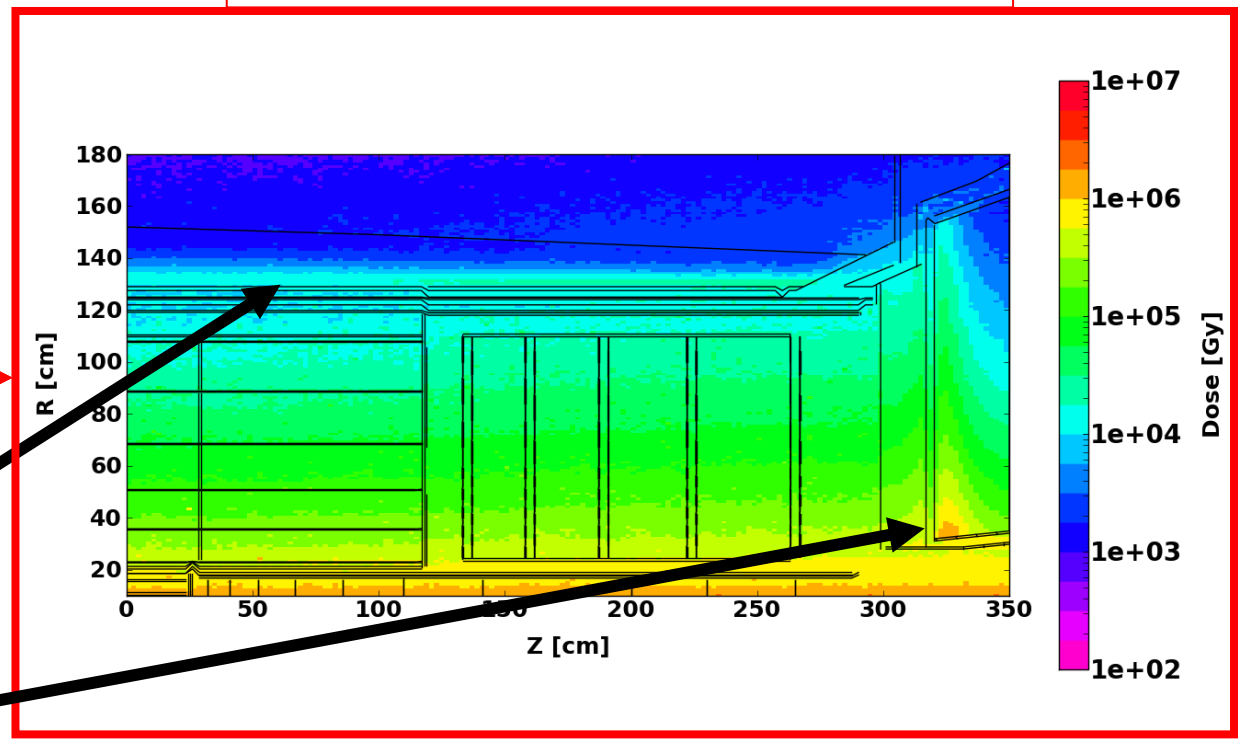

EB up to ~50 kGy

EE up to ~10^3 kGy

ECAL at High Luminosity LHC (after 2026)

Crystal transparency

- Has been measured regularly during data taking in Run1-Run2, and accounted for in specific corrections (**see Chia-Ming Kuo's talk tomorrow**)

- Is affected by radiation damage:
  - EM damage recoverable at room temperature
  - Hadron-induced damage (**dominant** at HL-LHC) not recoverable

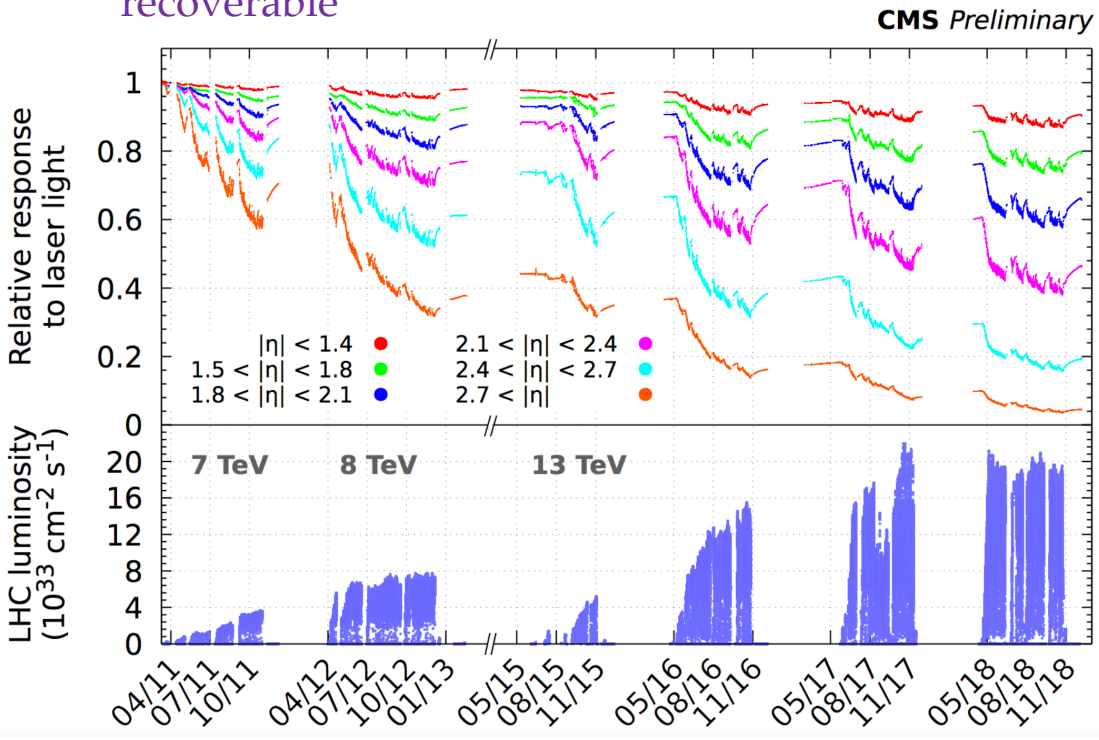

Expected signal loss in EB ($0 \leq |\eta| < 1.5$) from 55% to 70% at 3000 fb^{-1}

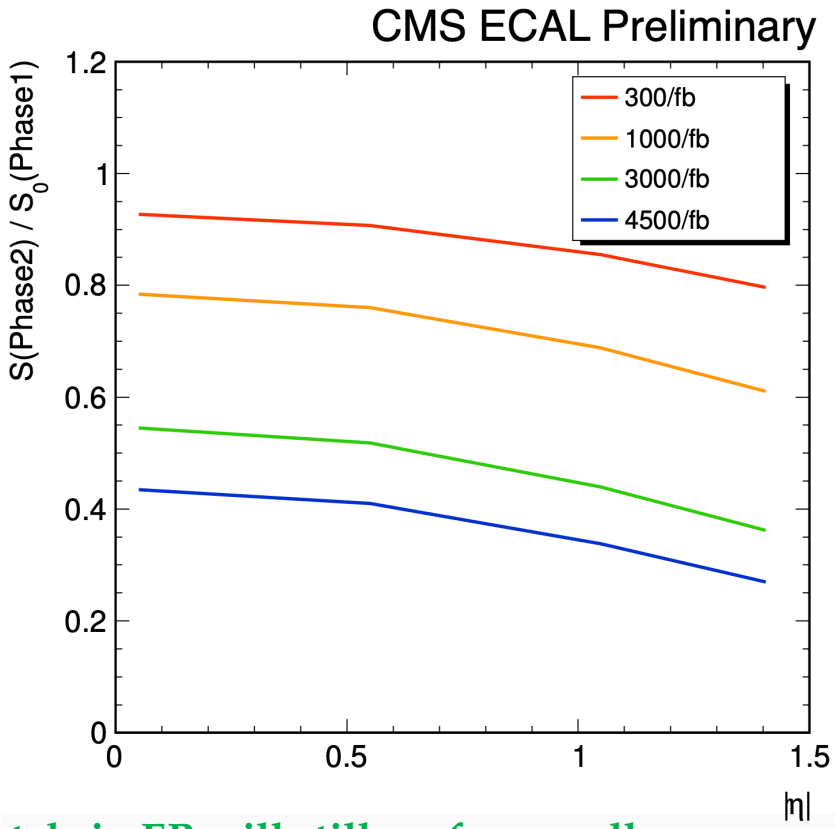

✓ **Crystals in EB will still perform well**

❑ **EE will be fully replaced by HGCAL, a high granularity calorimeter, silicon and scintillator-based (a few HGCAL talks during the conference)**

ECAL upgrade targets and strategy

https://cds.cern.ch/record/2283187/files/CMS-TDR-015.pdf

- **Limit radiation-induced APD noise in EB (proportional to $\sqrt{I_{dark}}$)**

Operation temperature reduced 18° C → 9° C. This will also enhance the light yield by ~20%

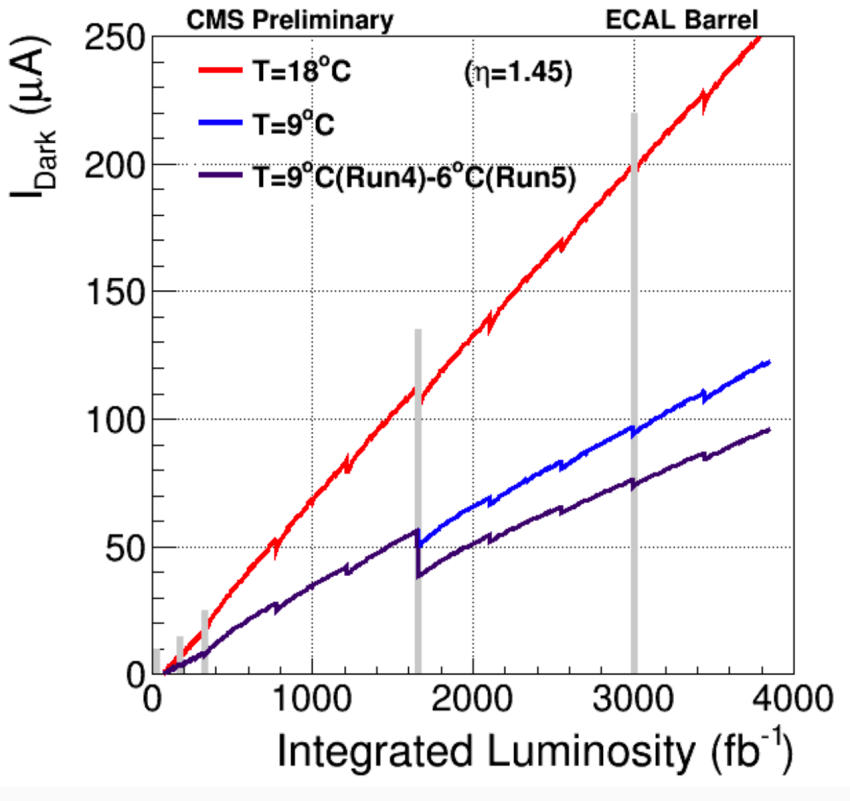

ECAL upgrade targets and strategy

https://cds.cern.ch/record/2283187/files/CMS-TDR-015.pdf

- **Limit radiation-induced APD noise in EB (proportional to $\sqrt{I_{dark}}$)**

  → Operation temperature reduced 18° C → 9° C. This will also enhance the light yield by ~20%

- **Complete redesign of EB electronics from the APD up**

  - Cope with increased CMS-wide L1 trigger latency (4.5 μs → 12.5 μs) and rates (100 kHz → 750 kHz)
  - Upgrade trigger capabilities

    → L1 trigger logic moved off-detector and evaluated by powerful and flexible FPGA processors

  - Improve time resolution (30 ps at 50 GeV) → better primary vertex ID
  - Improve discrimination between scintillation light from EM showers and direct hits in the APD ("spikes")

    → Faster analog electronics and sampling frequency increased to 160 MHz

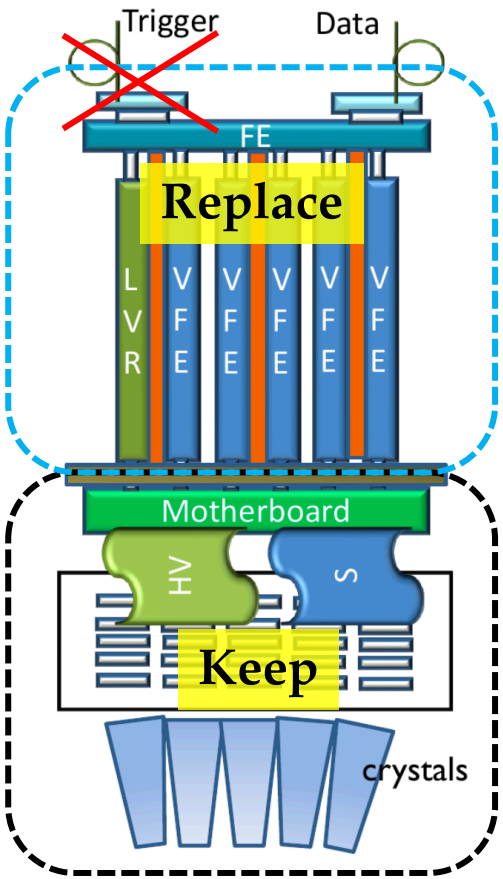

ECAL electronics upgrade

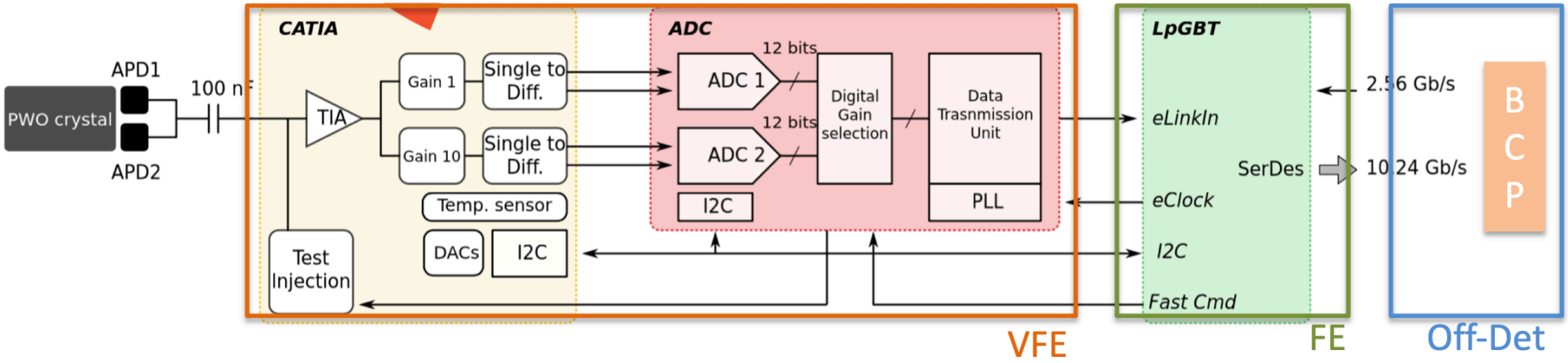

VFE → serves 5 crystals

- **Analog** ASIC: CATIA
  - 35 MHz trans-impedance amplifier
- **Digital** ASIC: LiTE-DTU
  - 12-bit, 160 MHz ADC, Data Transmission Unit

FE → serves 5 VFEs

Fast optical links to stream all crystals data off detector at 40 MHz using lpGBT; clock distribution

LVR

Rad-hard voltage regulator cards based on the FEAST DC-DC converter

Off-Detector

Barrel Calorimeter Processor (BCP)

- FPGA-based
- L1 primitive formation and readout cards
- Pulse reconstruction
- Spike rejection
- Receive and distribute LHC clock to FE

CATIA

CAlorimeter Trans-Impedance Amplifier

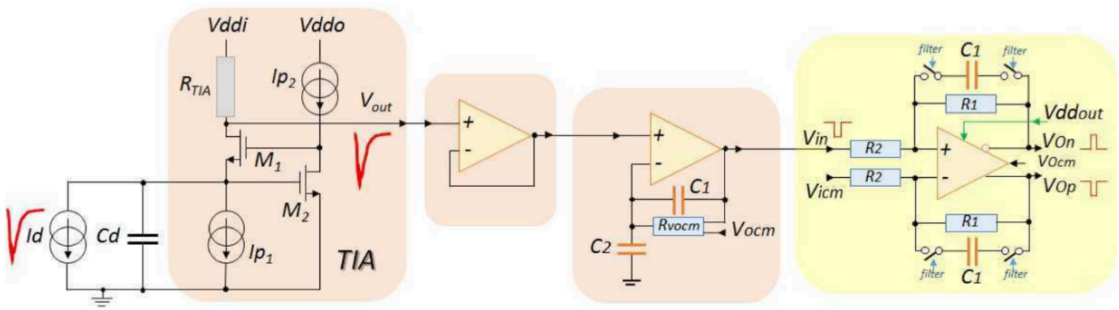

- 130 nm CMOS
- 35 MHz bandwidth (imposed by APD/kapton impedance)
- 2 gain (x1 and x10) to cover a dynamic range from 50 MeV to 2 TeV
- Test pulse injection

Faster response allows better separation between scintillation and spikes

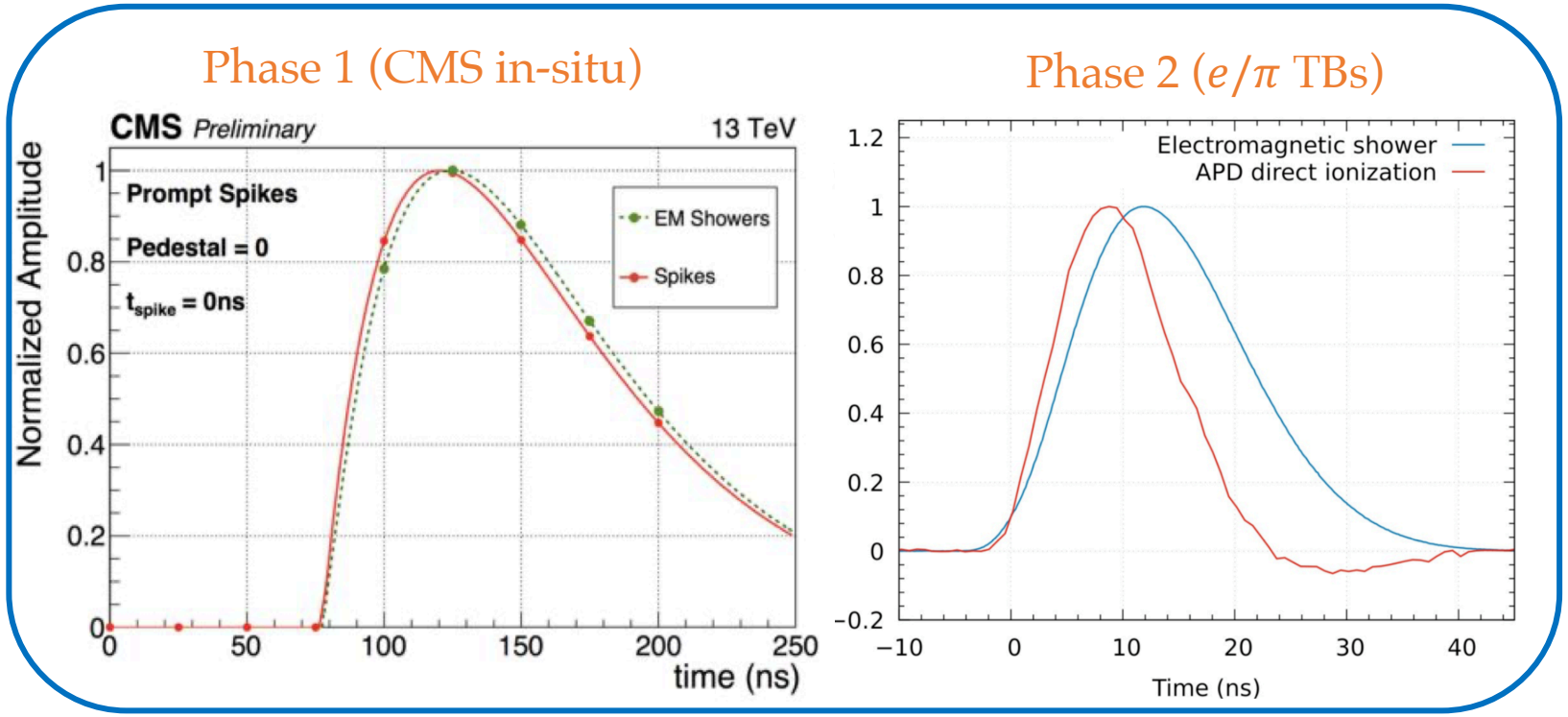

CATIA

CAlorimeter Trans-Impedance Amplifier

V0 and V1 tested in lab and test-beam showed excellent performance in terms of noise and linearity

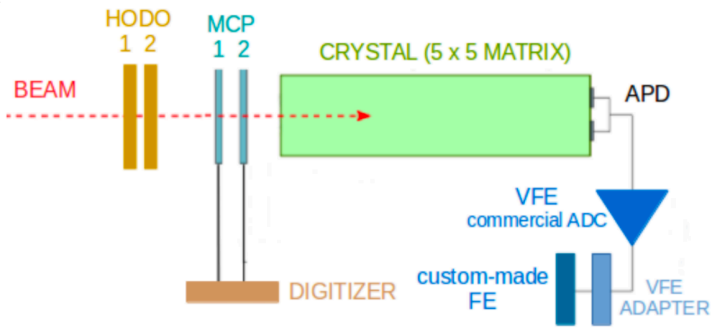

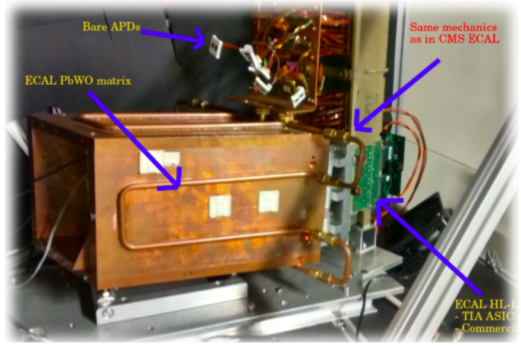

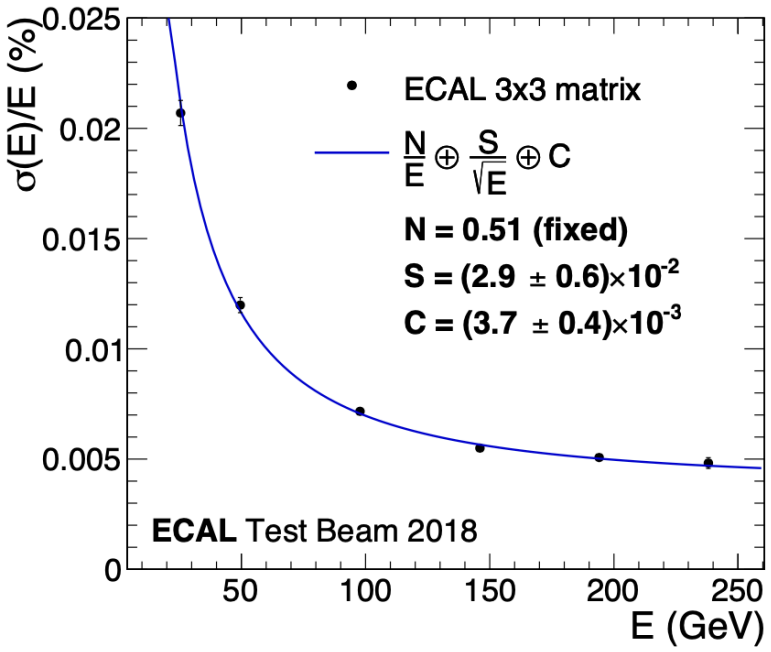

Energy resolution matching Legacy electronics

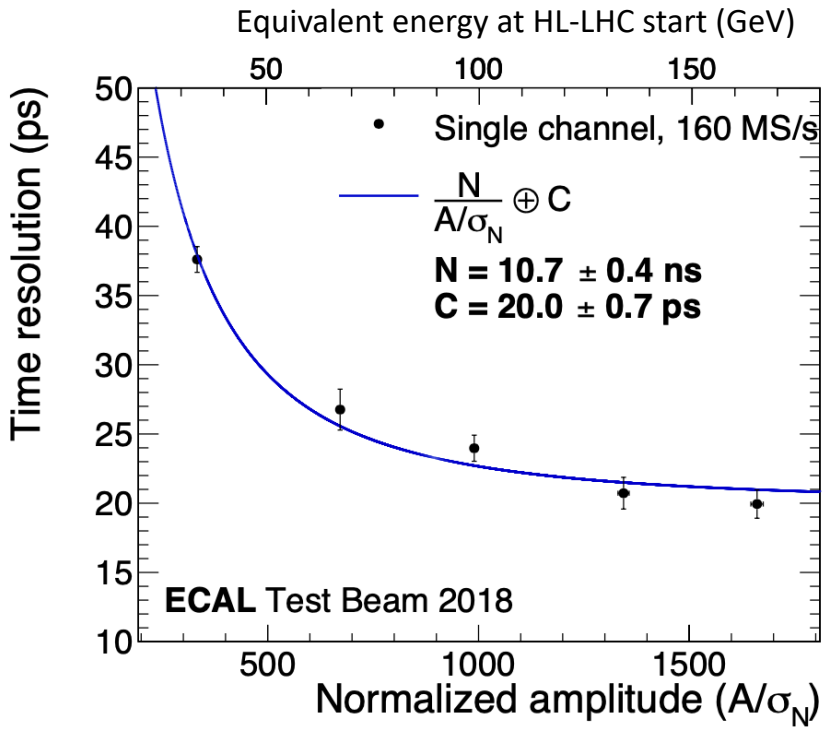

Time resolution < 30 ps for E > 50 GeV, matching the target for HL-LHC

LiTE-DTU

Lisbon-Torino ECAL Data Transmission Unit

- Digital ASIC in 65 nm CMOS technology
- 2x 12 bit, 160 MHz ADC
- Data Transmission Unit implements baseline subtraction, gain selection, serialization and data compression logic
- PLL block from lpGBT
- TID tolerance up to 100 kGy
- SEU-protected control logic

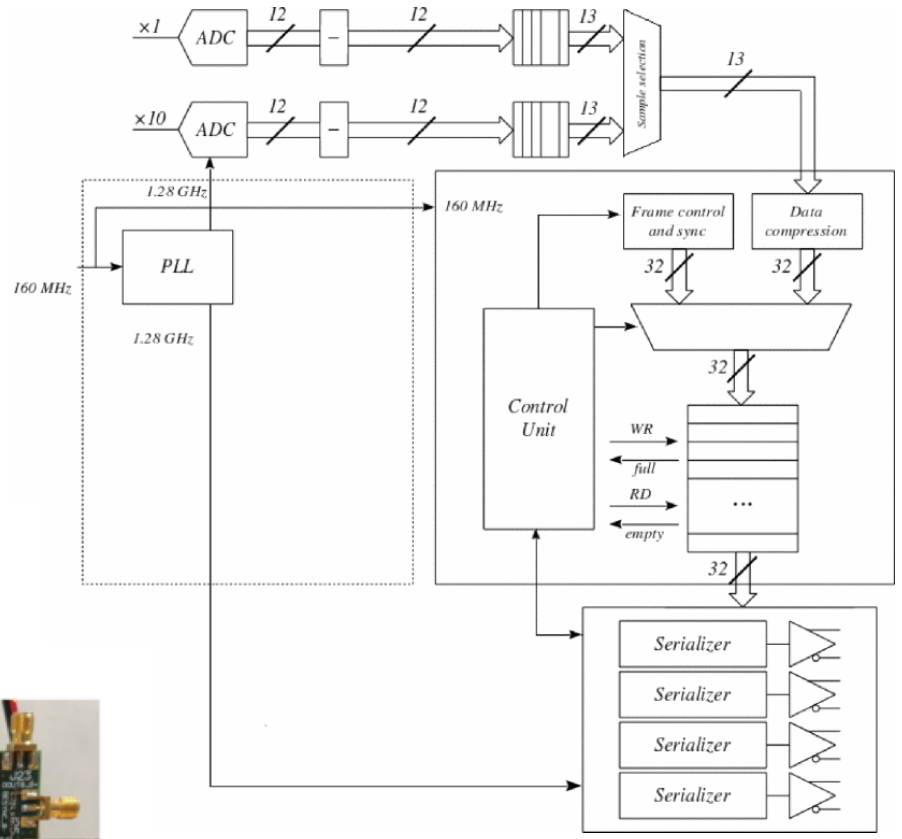

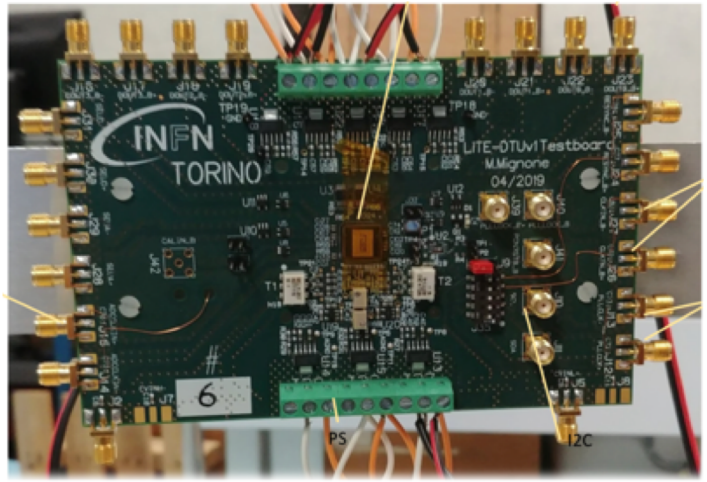

Lisbon-Torino ECAL Data Transmission Unit

Compression algorithm

Based on a simplified Huffman encoding

12 + 1 bits words at 160 MHz → **2.08 Gb/s** bandwidth occupancy

…but lpGBT e-link rate is **1.28 Gb/s**

Compression algorithm reduces occupancy **down to 1.08 Gb/s**

Hit energy spectrum falls very rapidly → noise or low energy signals make most of the transmitted samples. The compression algorithm uses 6 bits to encode signals of up to 2.5 GeV of energy, and 12 (+1) bits for more energetic signals, while keeping latency < 350 ns

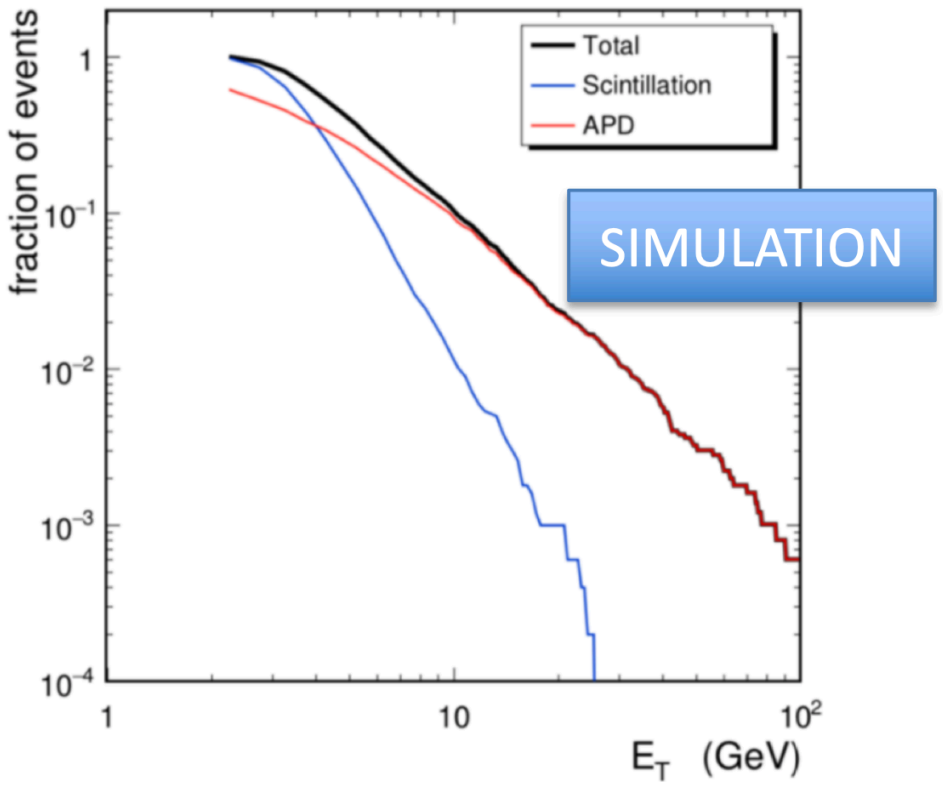

Front-End

Front-End

- Initialization and control of all VFE components
- eLink serial interface to ADC, clock and i²C interface
- Precise clock distribution to all VFE cards
- Streaming of the digitized data generated by the VFE to the back-end electronics
- 4 uplinks at 10.24 Gb/s (data links)
- 1 downlink at 2.56 Gb/s (control link)

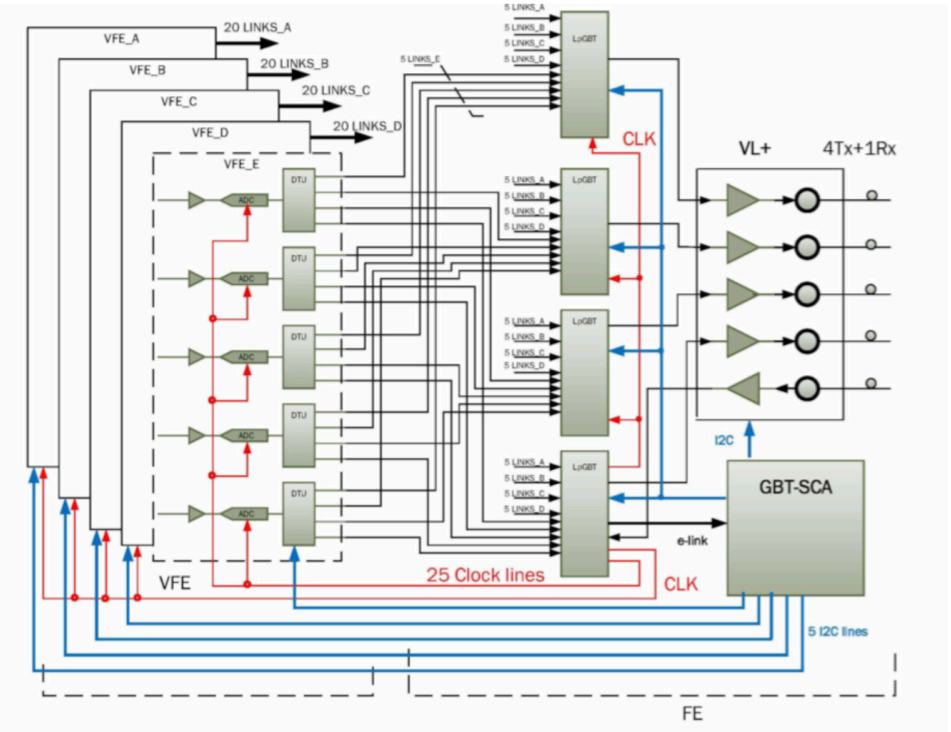

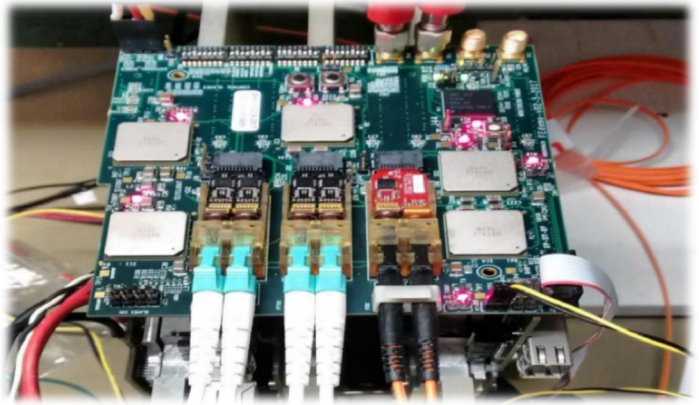

DISCLAIMER: no lpGBT-based connection here!
Coming in the next prototype

Off-Detector and Trigger

Barrel Calorimeter Processor

- FPGA-based, ATCA blade form factor
- Common for ECAL and HCAL
- Trigger primitive formation
- Clock distribution
- Detector control
- Data readout
- Decompression

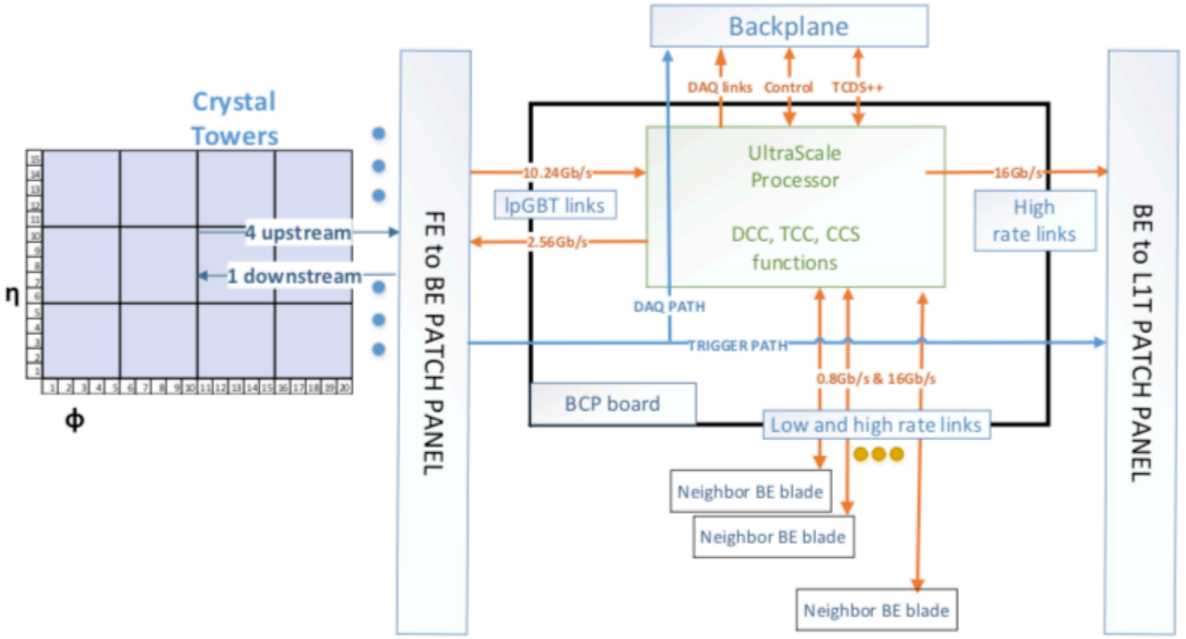

Streaming samples off-detector

- Better granularity: L1 trigger primitives at crystal level (currently 5x5 matrix)
- Power and flexibility thanks to FPGA: anomalous signal rejection, PU subtraction etc.

Next steps

A “vertical test” of the upgrade electronics is foreseen at the end of 2020, with most up-to-date versions of the boards

Then…

During LS3 (2024-2026) we will refurbish ECAL

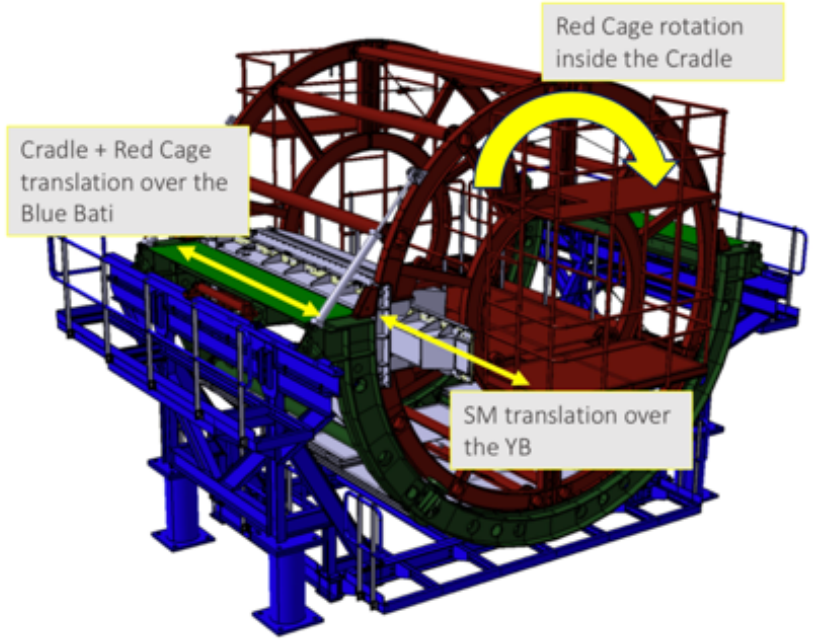

All the crystals will be translated outside CMS (using “enfourneurs”) and the new readout electronics will be installed

Conclusions

The CMS ECAL has been of paramount importance for the CMS scientific program and has performed well during LHC Run1 and Run2

- Due to strong increase of radiation levels and reduction of crystal transparency, ECAL Endcaps will have to be replaced by a new kind of detector at HL-LHC

✓ ECAL Barrel crystals will still perform well, but their readout electronics from the APD up will be upgraded to:

- ❑ Improve L1 trigger capabilities/flexibility
- ❑ Allow better anomalous signal rejection
- ❑ Withstand increased radiation at HL-LHC
- ❑ Cope with increased pile up, improving time resolution (< 30 ps at 50 GeV)

▪ Such targets will be achieved by:

- ❑ Lowering operational temperature (18° → 9°)
- ❑ Using a faster readout electronics and increasing the sampling rate
- ❑ Streaming all data and forming trigger primitives off-detector

BACKUP

Spikes or “anomalous” signals

Spikes are signals generated by hadron interaction within the APD volume

“Anomalous” in terms of energy release wrt EM showers, but not in terms of frequency

If not suppressed, they would dominate the L1 trigger rate at HL-LHC