X-ray imaging of moving objects using on-chip TDI and MDX methods with single photon counting CdTe hybrid pixel detector

Miroslaw Zoladz, Pawel Grybos, Robert Szczygiel

AGH University of Science and Technology, Department of Measurement and Electronics

corresponding author, zoladz@agh.edu.pl

X-ray imaging of moving objects with a single row of pixels

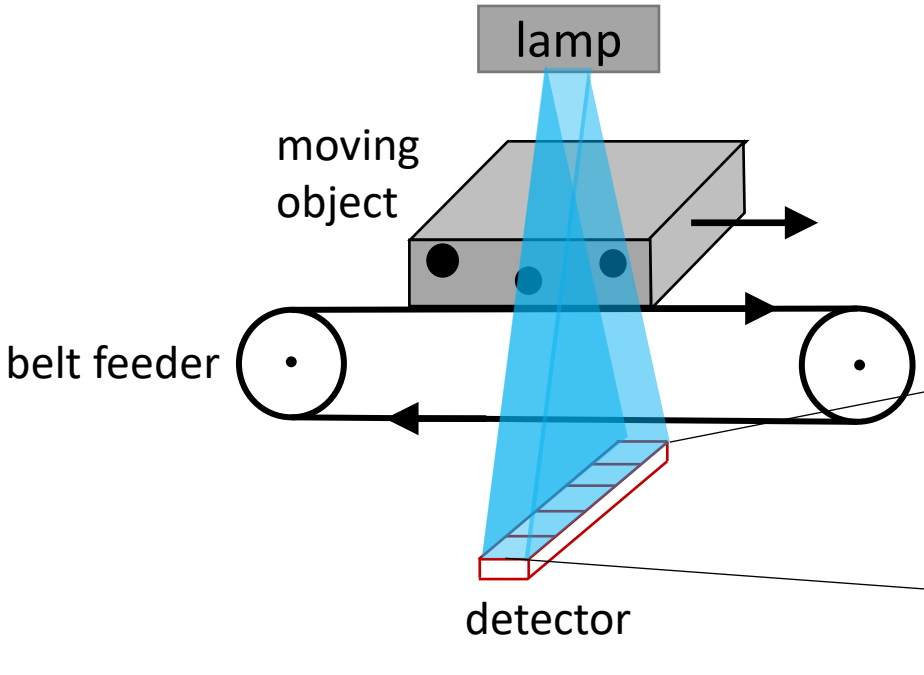

Concatenation of pixel rows images corresponding to **consecutive** time **moments**

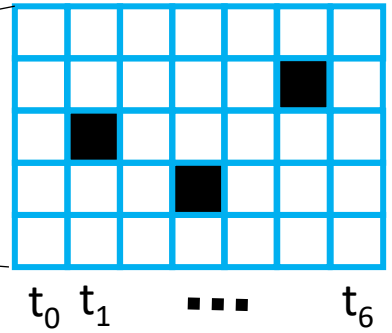

Resolution increasing

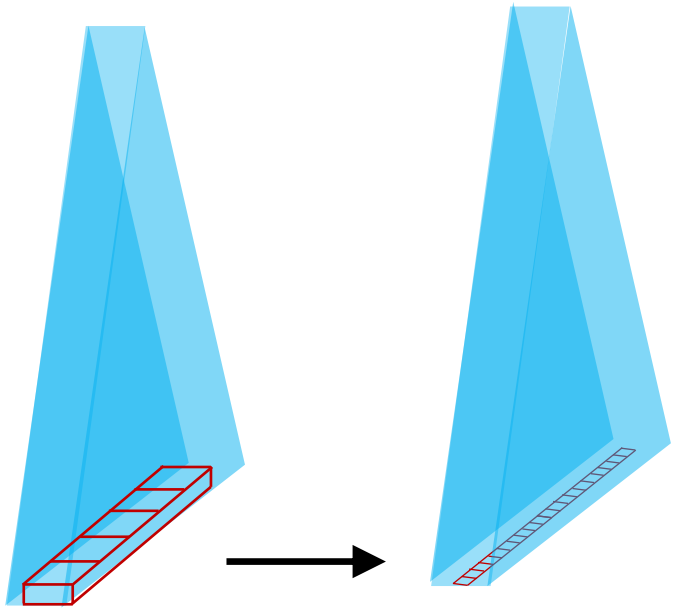

Resolution increasing by pixel downsizing

Drawback: decrease of image Signal to Noise ratio (SNR) caused by decrease of rate of counts per pixel (worst radiation flux utilization)

Trade-off between SNR and spatial resolution

Pixel matrix instead of pixel rows

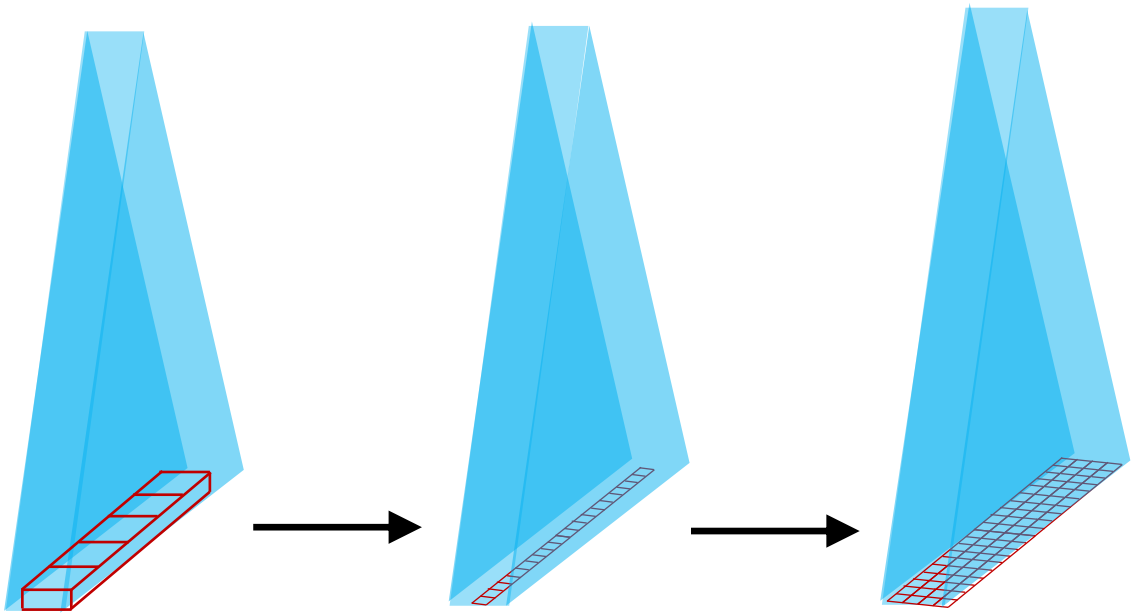

To overcome trade-off between SNR and resolution a **pixel matrix** instead of pixel row can be used

It allows, among the other, for **better utilization** of **radiation flux.**

Time Domain Integration

To obtain a **continuous and sharp** image of the **object moving** across the pixel matrix a **Time Domain Integration (TDI)** has to be used

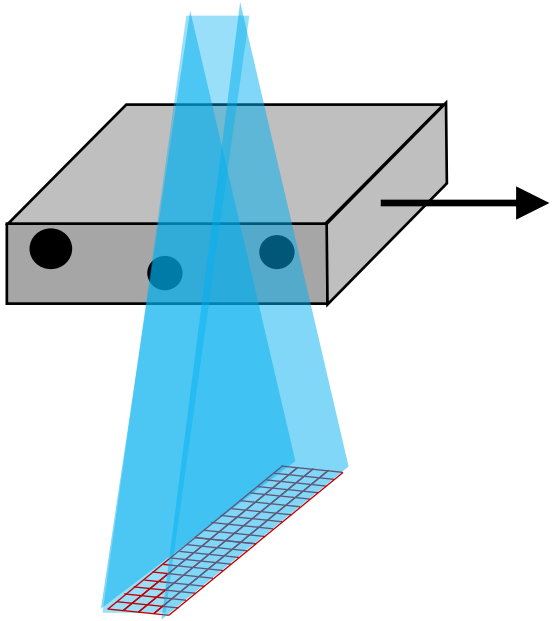

Straight forward TDI implementation is based on the accumulation of images corresponding to consecutive phases of object movement.

Due to object movement images have to be properly **shifted before the addition** operation

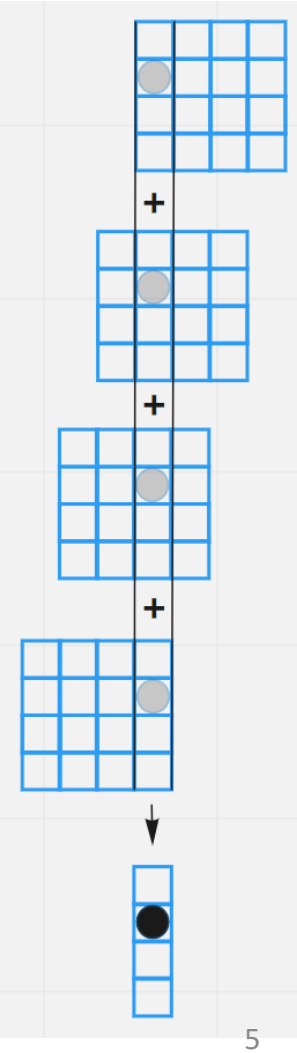

Detection imperfections correction

Due to detector imperfections like **inhomogeneity** and **bad pixels** flood field operation (multiplication) and bad pixel correction (rule based) has to be performed before images accumulation.

Generally above corrections are quiet **straightforward** and **regular**. The **exception** is **bad pixel correction** which base on pattern matching. However the **number** of bad pixels **usually** should **not** be **large**.

Data volume aspect - real case study

Object speed: 1 m/s

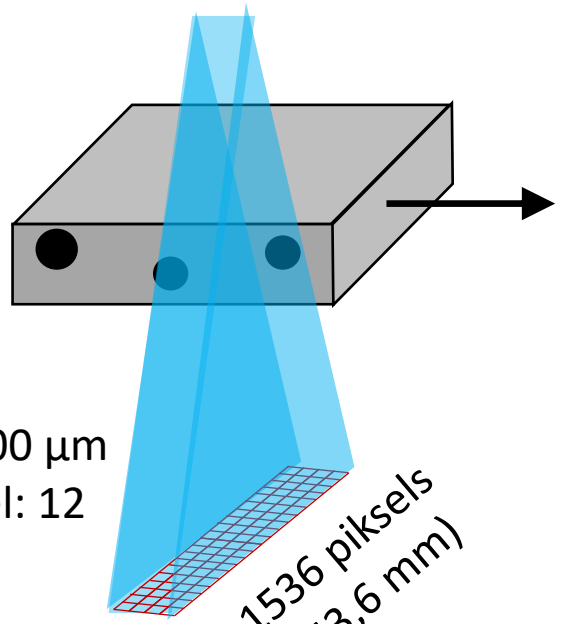

Pixel size: 100 µm
Bits per pixel: 12

64 pixels
(6,4 mm)

object speed pixel size

10,000 matrix readouts per second for sharp image

bits per matrix

c.a. 1G of 12-bit words per second

data transfer

detector imperfections correction + TDI

Possible but could be **problematic from an economic POV**

TDI on Chip on single photon counting detector

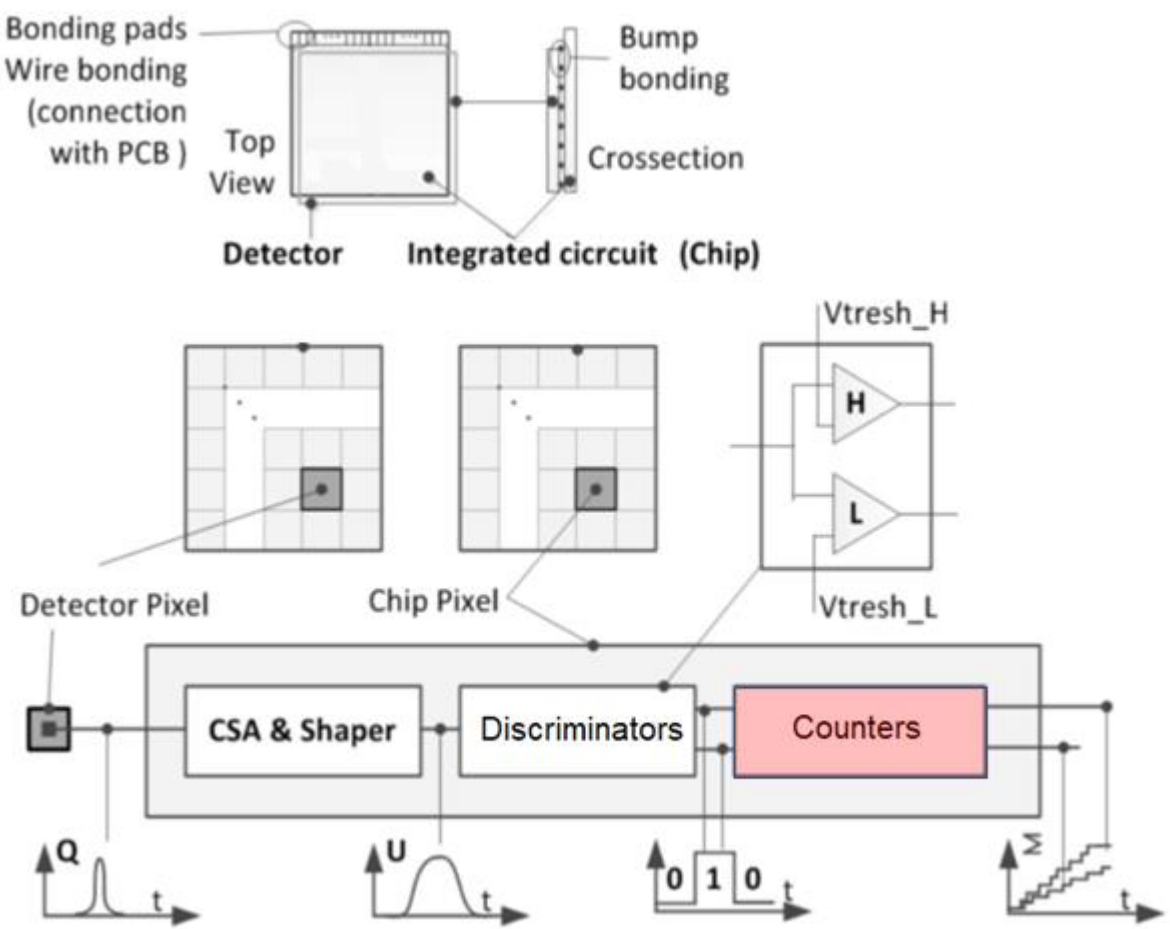

The **counter** is a kind of **adder** which adds counts for **consecutive time periods**.

It can change to **shift register.**

This can by utilized for **accumulation in TDI** implementation.

Time Domain Integration,

TDI on Chip implementation

Column: pixels along the object move

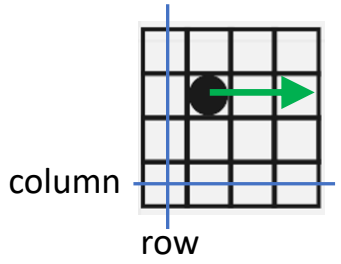

Off-Chip: Out of detector integration of images acquired during image movement

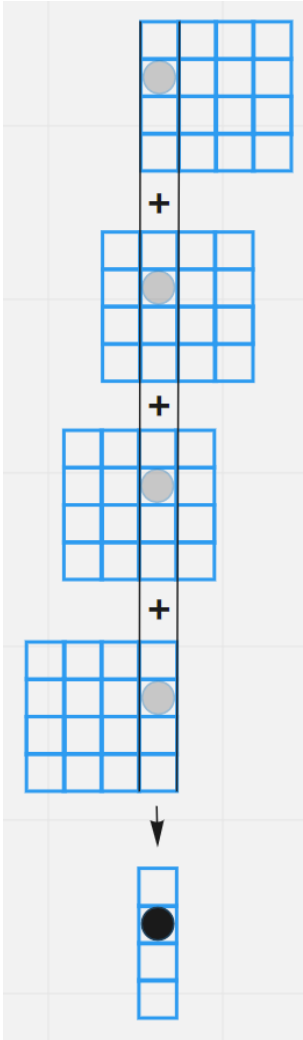

On-Chip: Integration inside chip obtained by **shifting pixel columns synchronously with object movement**

Single column example:

- single photon per acquisition period
- acquisition period **interspersed** with pixel shifts

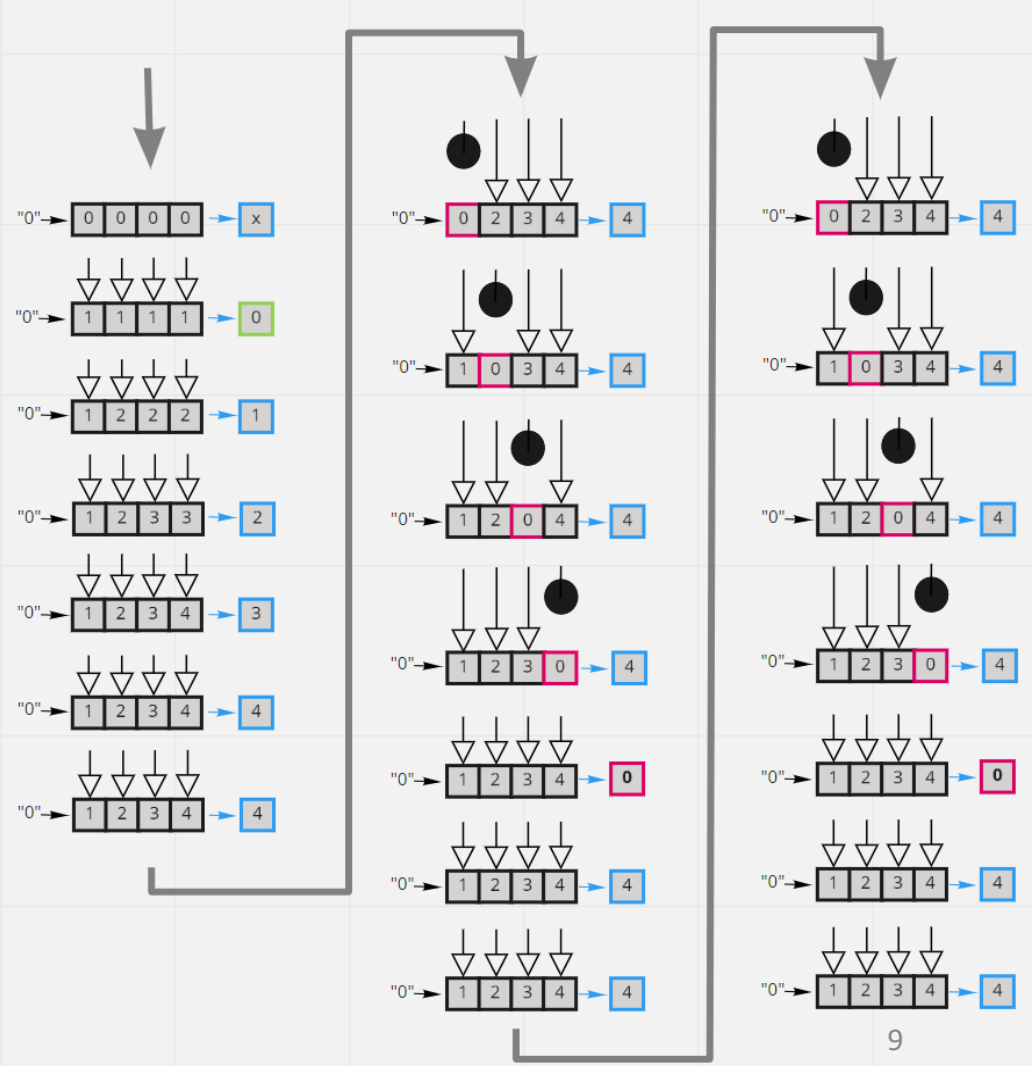

TDI on Chip implementation **- Single column output**

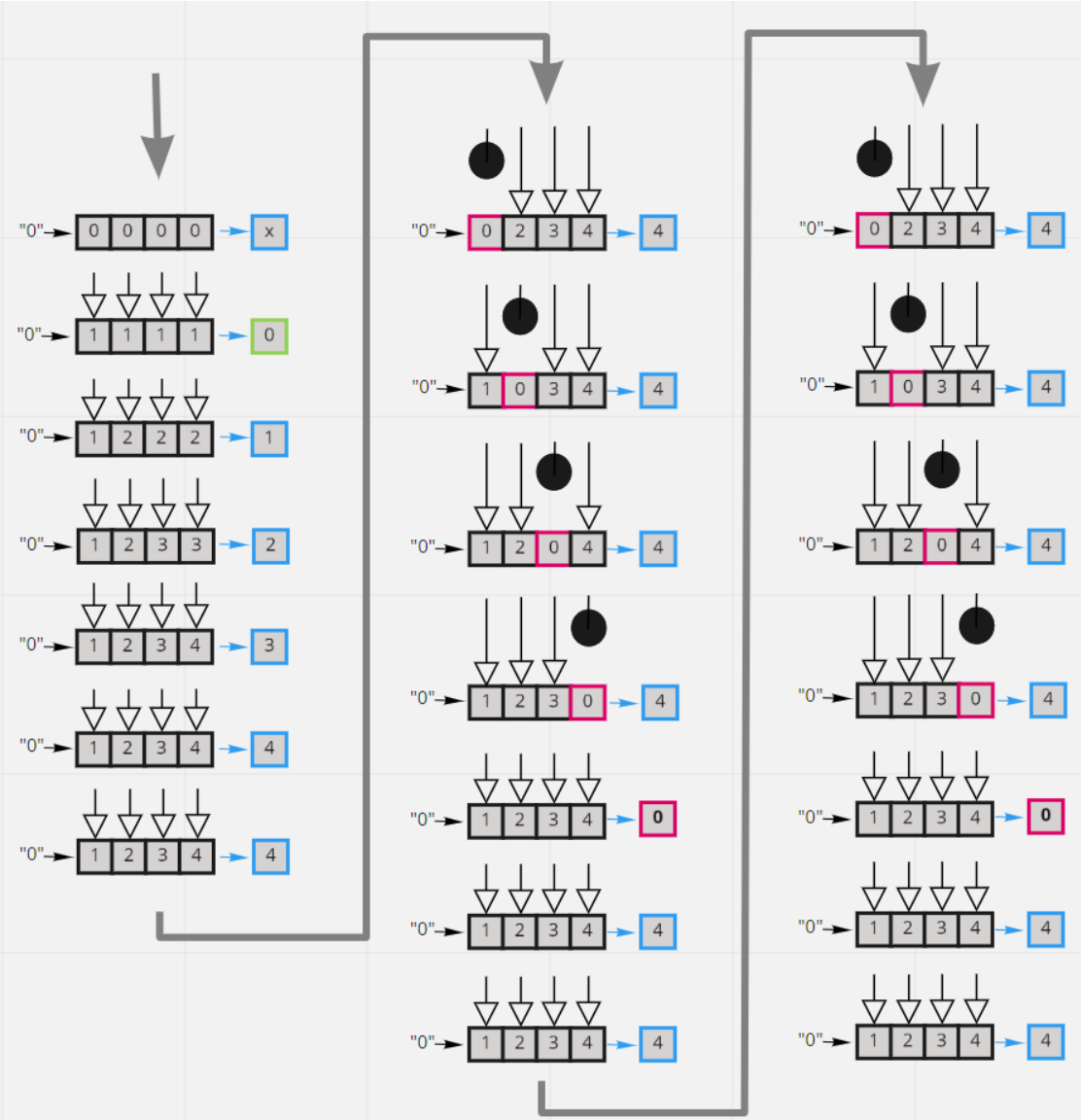

Single column output vs. time

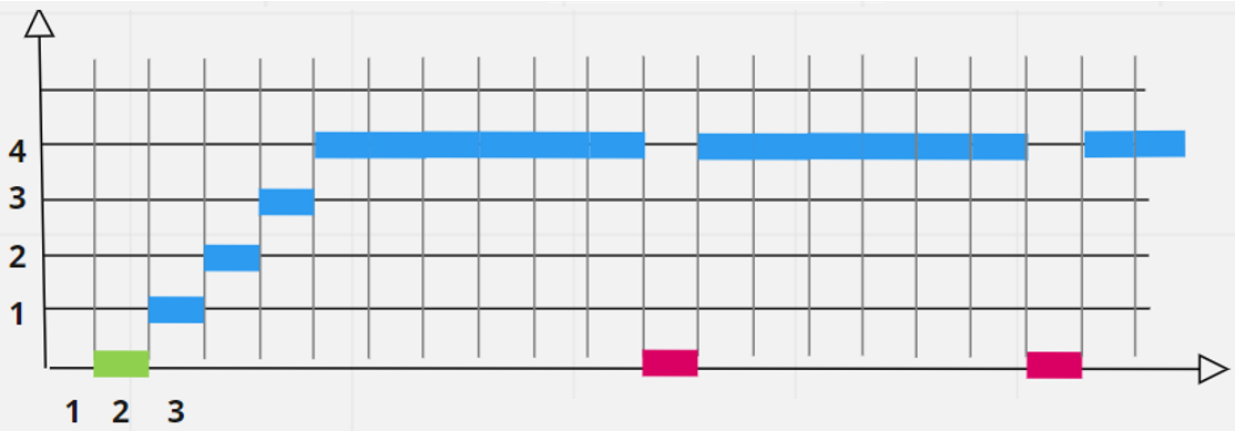

TDI on Chip – **Benefits – Data Volume**

Single **row** readout **instead** of single **frame** readout.
Data reduction equals to **row number.**

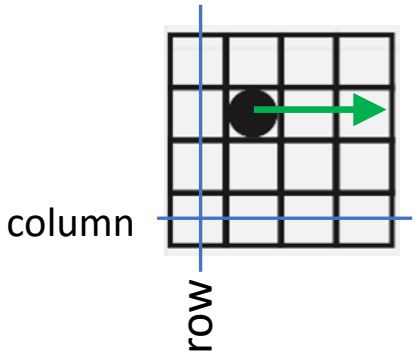

Object speed: 1 m/s

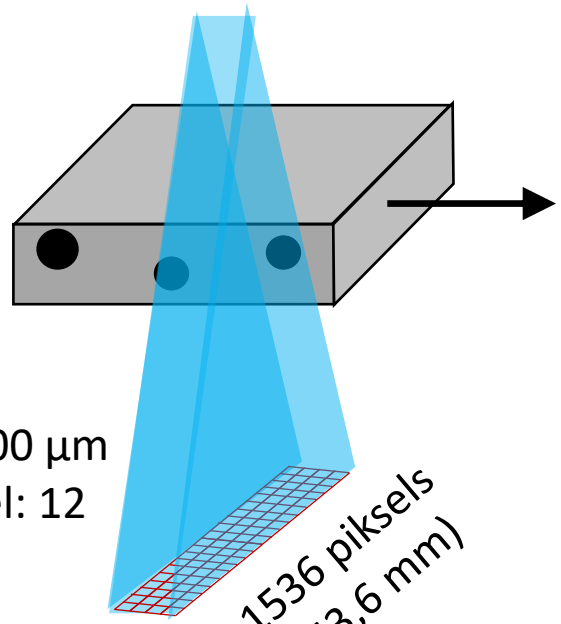

Pixel size: 100 µm
Bits per pixel: 12

64 pixels
(6,4 mm)

1536 piksels
(153,6 mm)

words per second
c.a. 1**G** of 12-bit

/64

c.a. 15**M** of 12-bit

TDI on Chip – **Benefits – Data Processing**

Regarding **data processing**:

- No longer need for **images accumulation**
- **Flood field** correction is replaced by **row normalisation**

  Row by correction factors instead matrix (64 less multiplications)
- **Bad pixel,** which is quiet irregular operation**,** correction is also not longer needed

  It is enough to simply disable counting for pixels which behaves badly

  and the row normalisation, mentioned above, will do the rest.

MPIX detector module

MPIX chips are bump-bonded to 0.75 (1.5) mm thick CdTe detector.

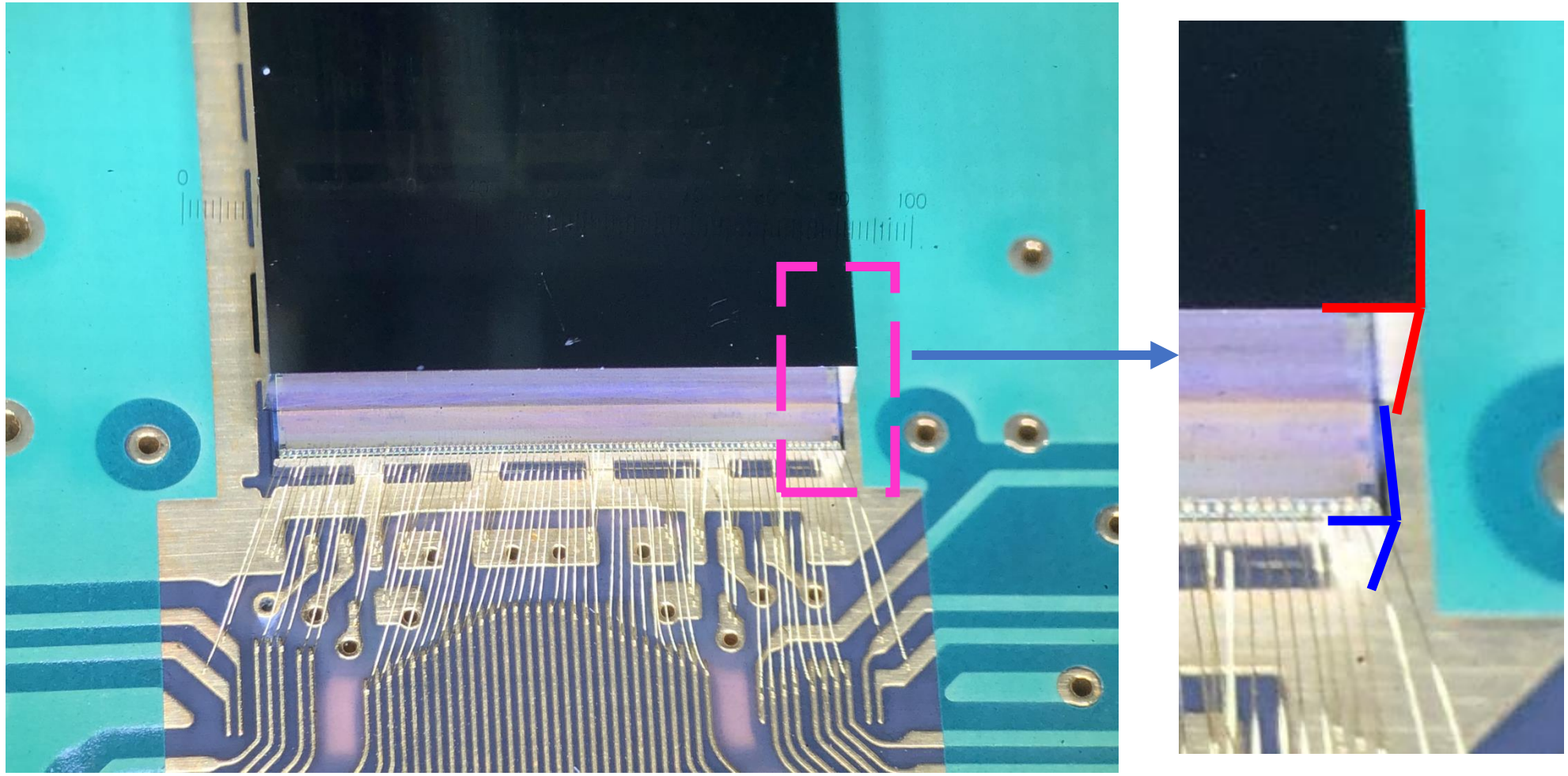

MPIX chip architecture

96 x 192 =18.432 pixels (size 100 x 100 um²) Techn. TSMC CMOS 0.13 μm, 8 metal layers, die size: X=9.631,56 um Y=20.290,89 um

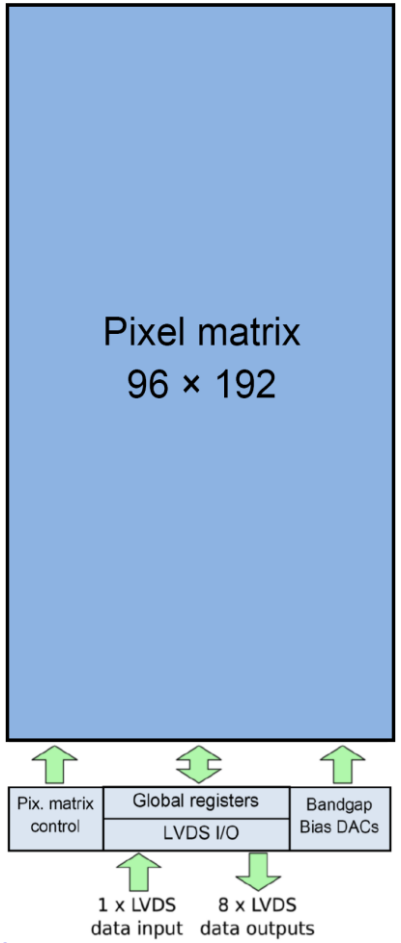

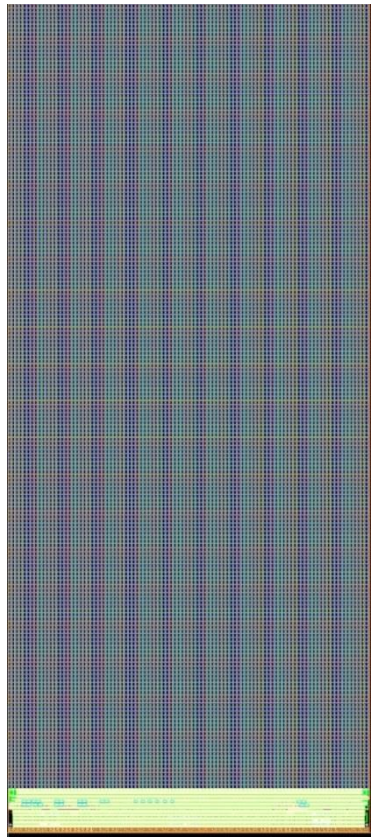

More details – see: oral presentation #178
18k Pixel Readout IC for CdTe Detectors Operating in Single Photon Counting Mode with Interpixel Communication
P. Grybos,*, R. Kleczek, P. Kmon, A. Krzyzanowska, P. Otfinowski, R. Szczygiel, M. Zoladz
IWORID 2021, Tue 29/6, time: 1:50 pm

Measurement setup

MPIX pixel architecture

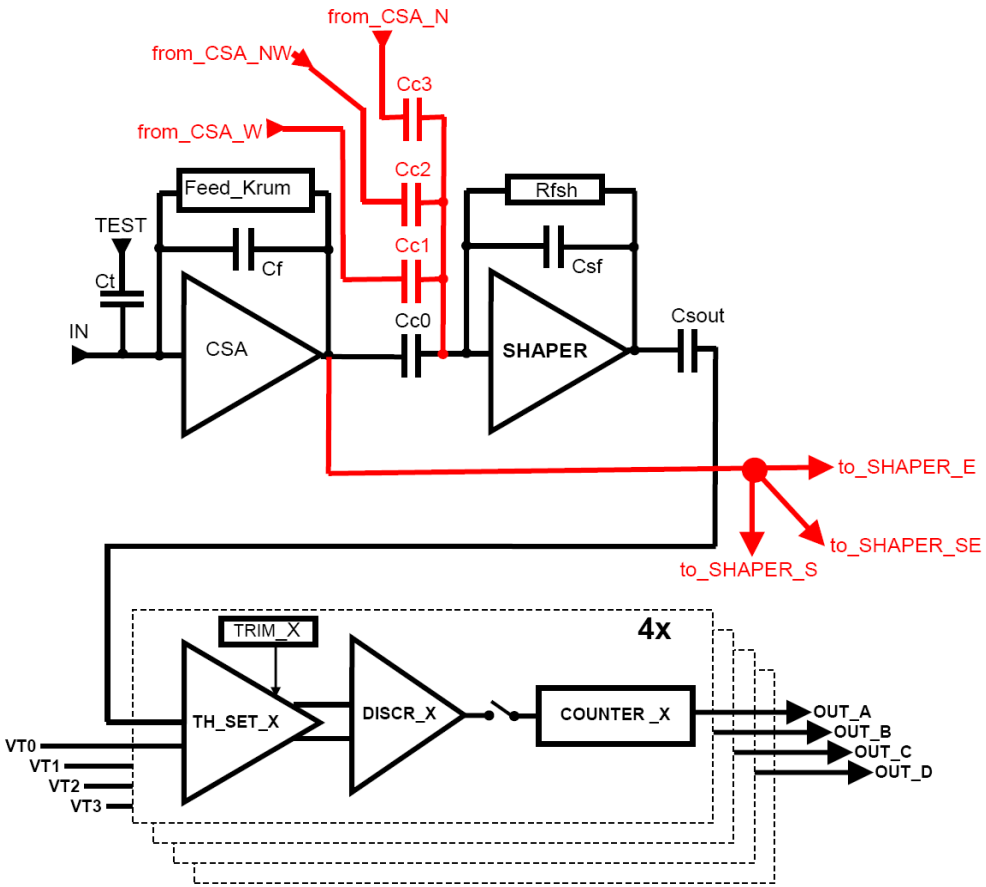

Simplified scheme of a single pixel (in red the interpixel communication are marked).

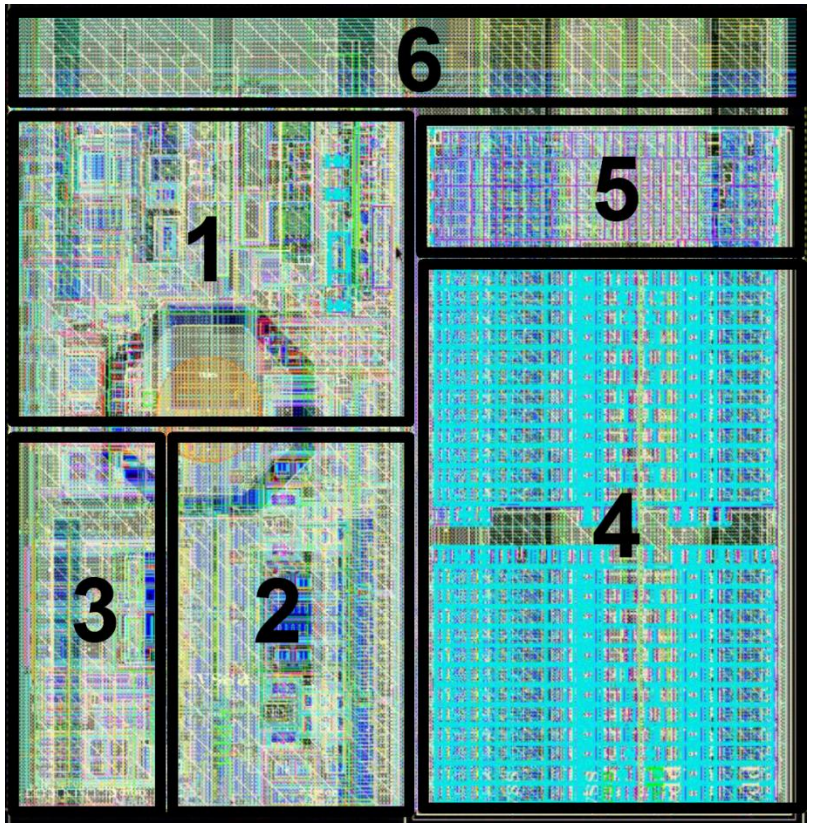

Layout of a single pixel of 100 × 100 μm²: 1 – CSA and SHAPER , 2 TH_SET, DISCR and TRIM DAC 3 - references for bias currents, 5 - TH_SET, TRIM_DAC, DISCR, 4 – counters and registers, 5 – logic for charge sharing correction, 6 – interpixel communication channels

More details – see: oral presentation #178

Measurement setup **- Test stand**

Industrial machine for X-ray food inspection:
- lamp
- belt feeder
- **MPIX detector module**

Object: organic glass block with some “ingredients”

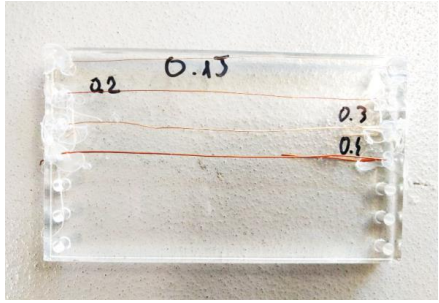

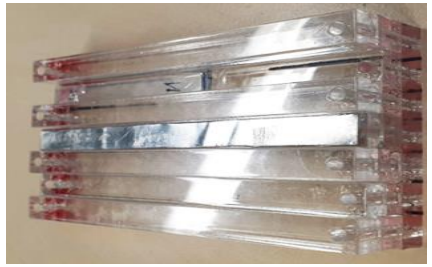

Detector illuminated

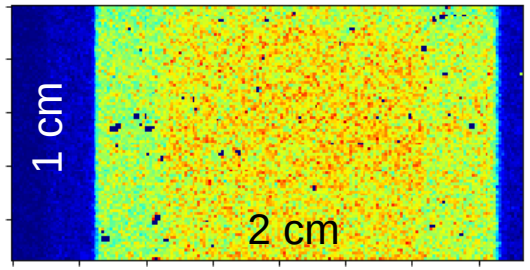

Object on belt feeder

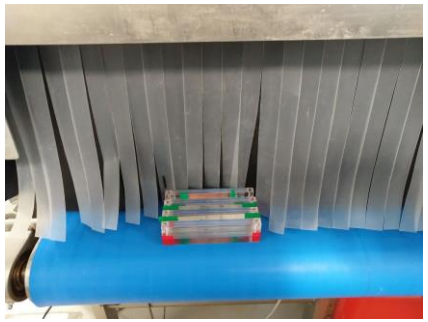

Detector module placed in machine

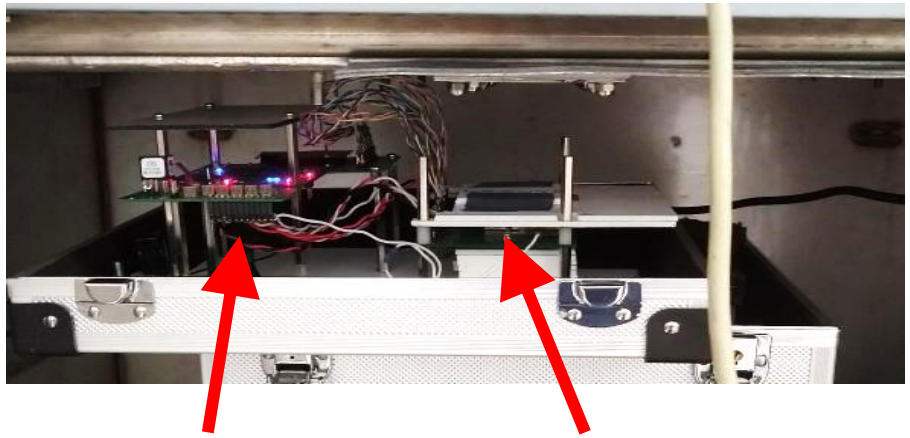

Readout system

Detector module

Spatial resolution test

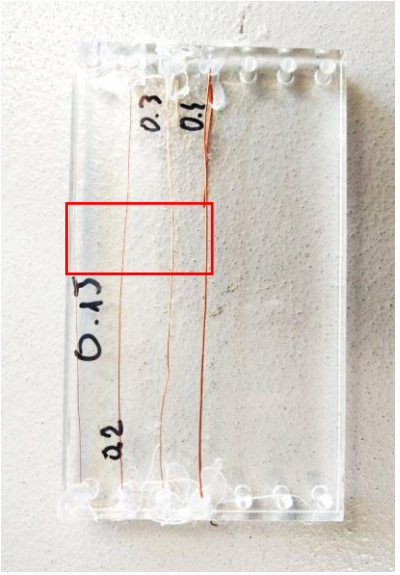

Wire diameters:
- **0.15mm,**
- 0.2mm,
- 0.3mm,
- 0.4mm

A conventional **scintillator detector**. Single row of 400 µm pixels.

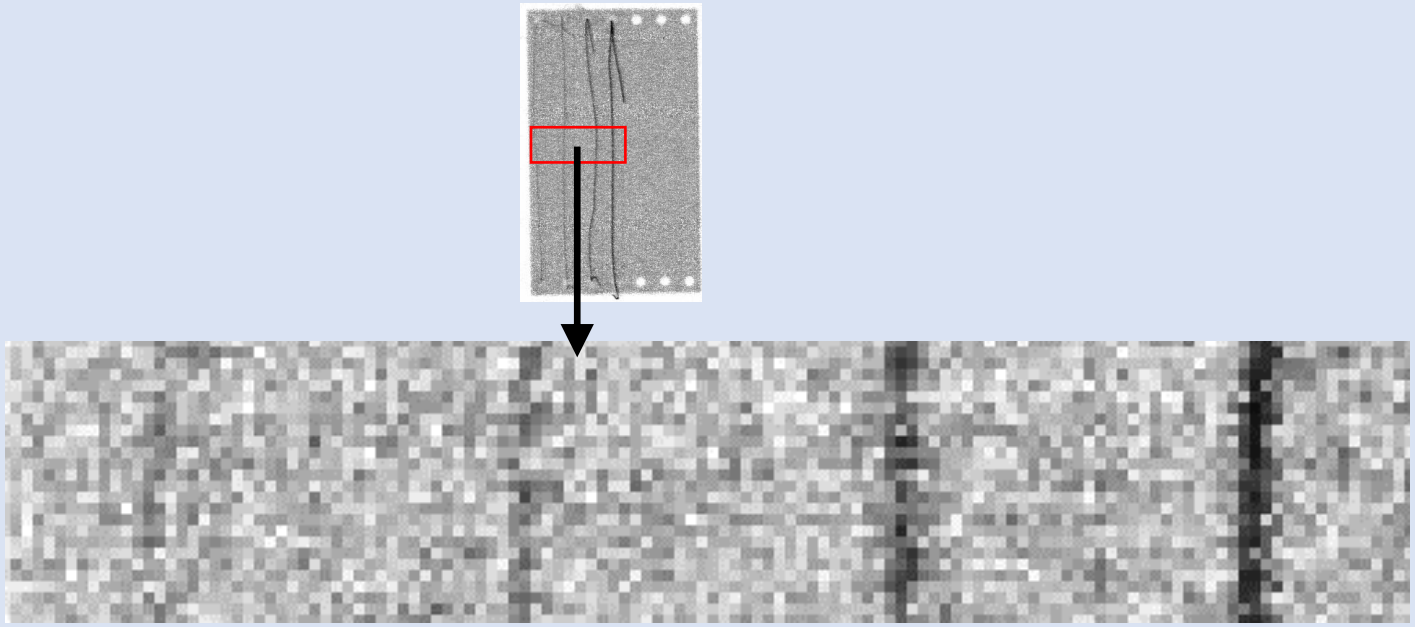

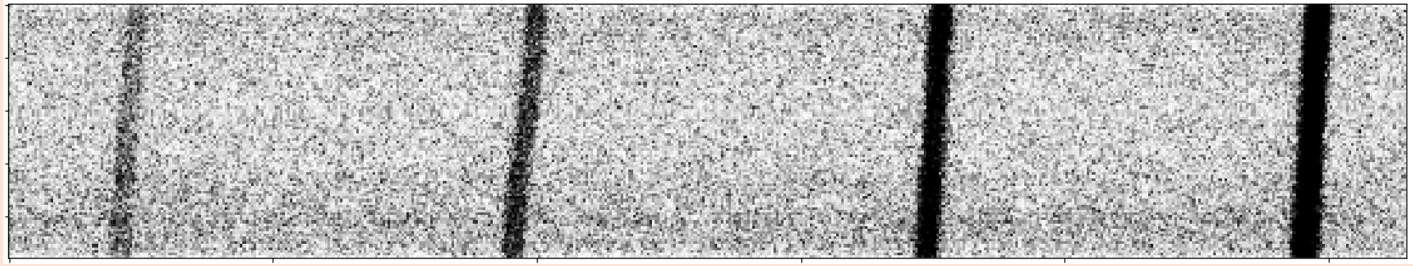

On-chip TDI on single photon counting CdTe hybrid pixel detector (100 µm)

Material Discrimination X-ray (MDX) : method of differentiation materials based on **chemical composition** (atomic number) instead of density variations.

It takes advantage of differences between **mass absorption coefficient** (energy penetration ability) of different materials.

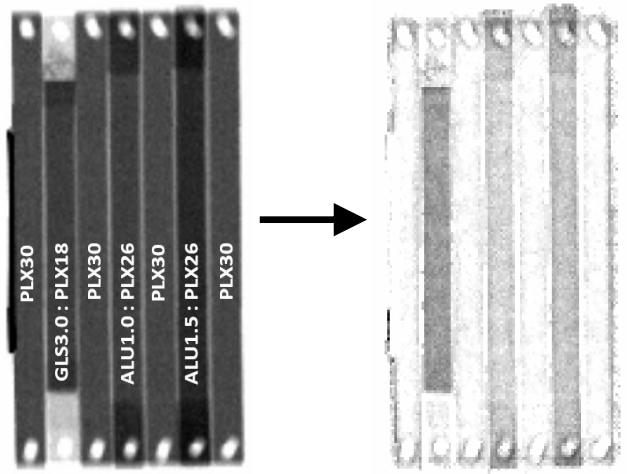

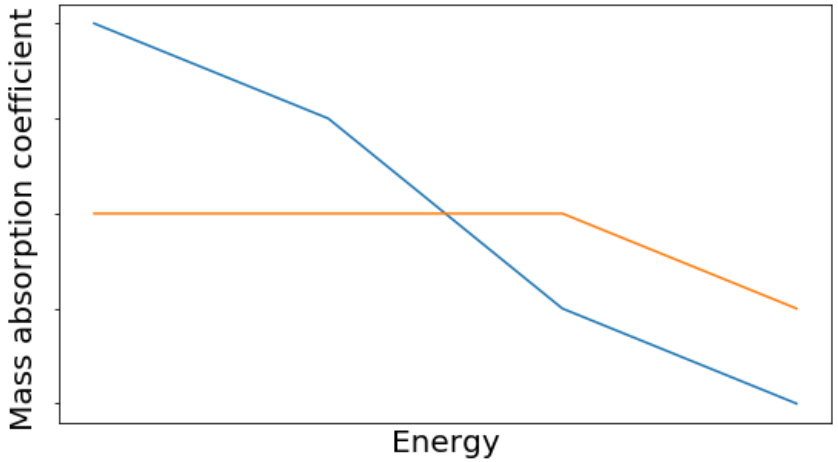

In case of conventional scintillator detectors **two detectors** have to be used **separated with a copper plate**.

The **plate filters out the low energy** x-rays so bottom detector is exposed only on high energy x-rays .

MDX gives information about **ratio between this two x-ray energy ranges** that pass through an object.

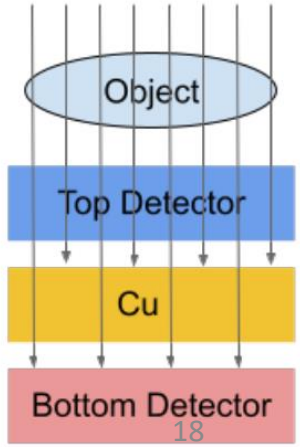

Single photon counting detectors

In case of **single photon counting** detectors **a single detector is sufficient** to implement the **MDX** method

<u>The role of filter play discriminators which number and threshold can be freely set.</u>

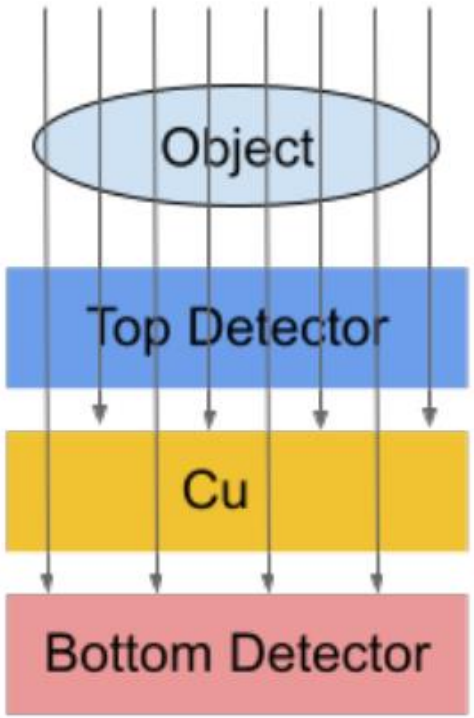

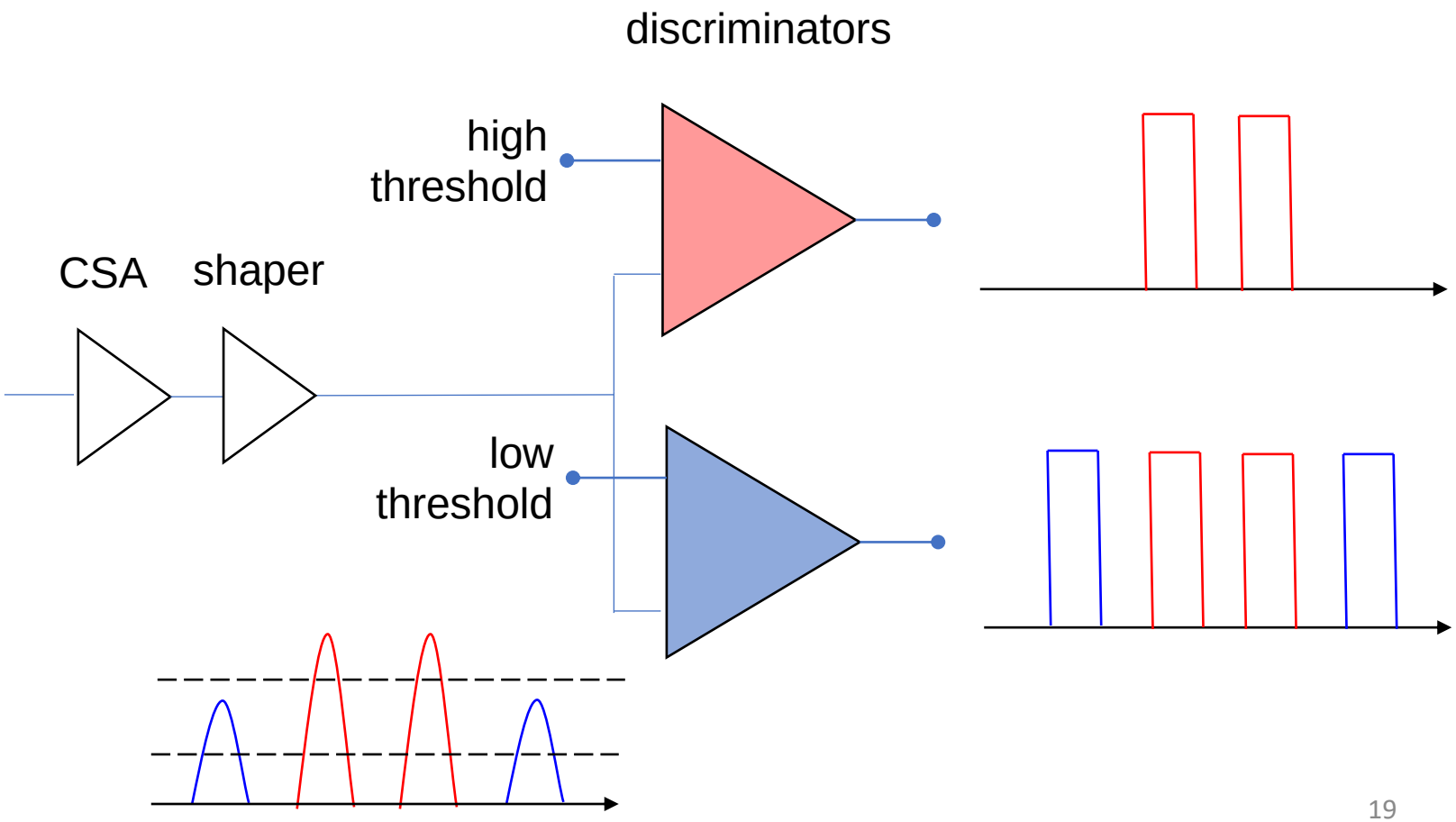

Test objective

Object:
- thick plexiglass block (PLX) with different thicknesses (specified in mm),
- thin aluminium (ALU) and glass (GLS) plates placed in 1 cm slots of plexiglass block.

Slot 1: PLX 30
Slot 2: PLX 30 + GLS 3.0
Slot 3: PLX 30
Slot 4: PLX 26 + ALU 1.0
Slot 5: PLX 30
Slot 6: PLX 26 + ALU 1.5
Slot 7: PLX 30

Objective: To “see” thin glass and aluminium plates placed on thick plexiglass block imitating meat.

Density image

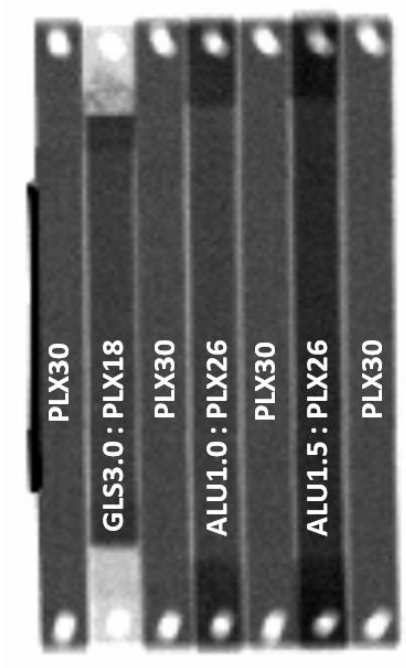

MDX image

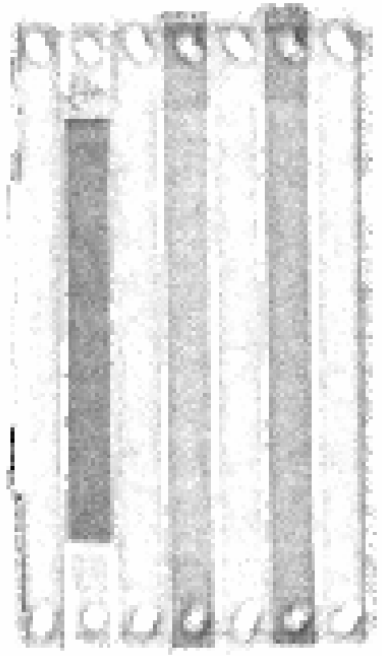

Material Discrimination X-ray

Test results, **Images**

plexiglass slots [mm]

metal plates [mm]

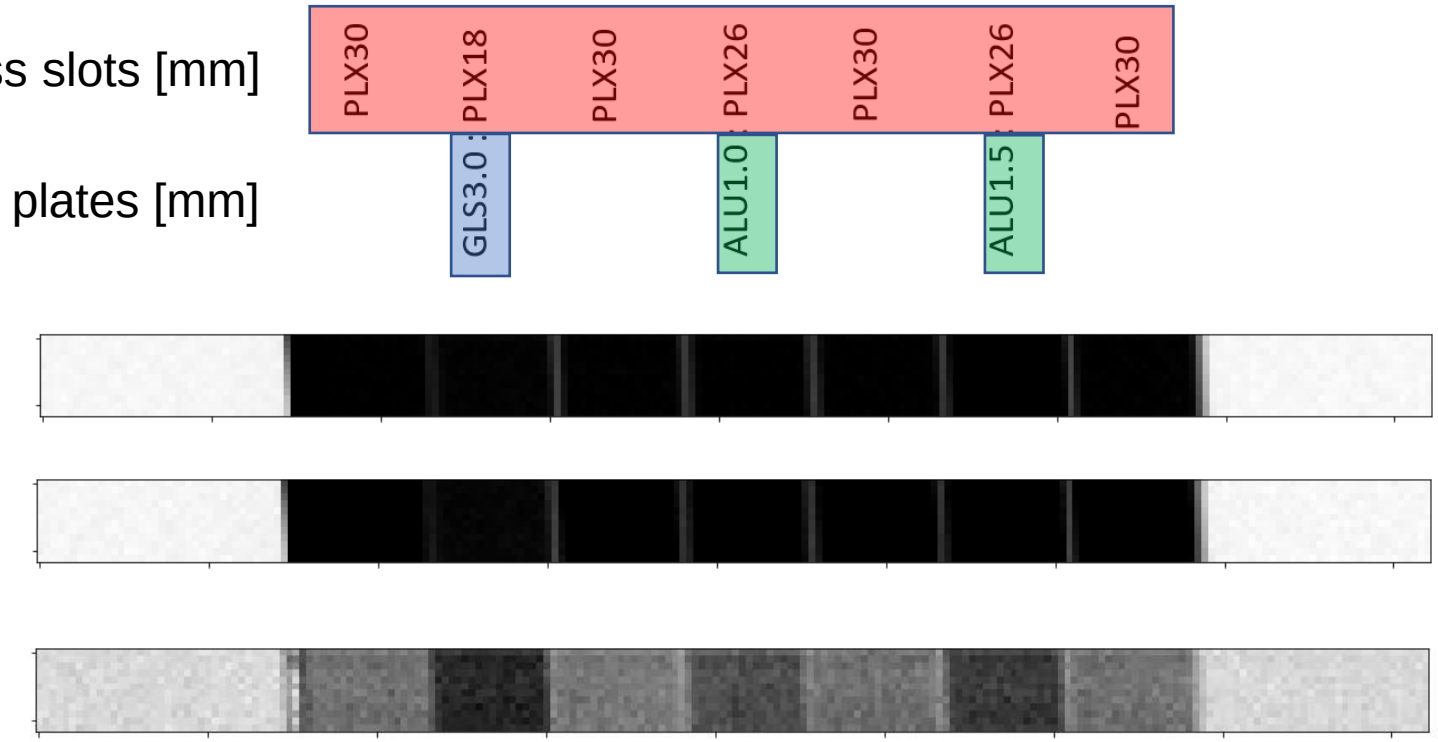

TR_LOW : **Transmitance** for low energy

TR_HIGH : **Transmitance** for high energy

MDX = TR_LOW / TR_HIGH

Material Discrimination X-ray

Test results, Images intensity profiles

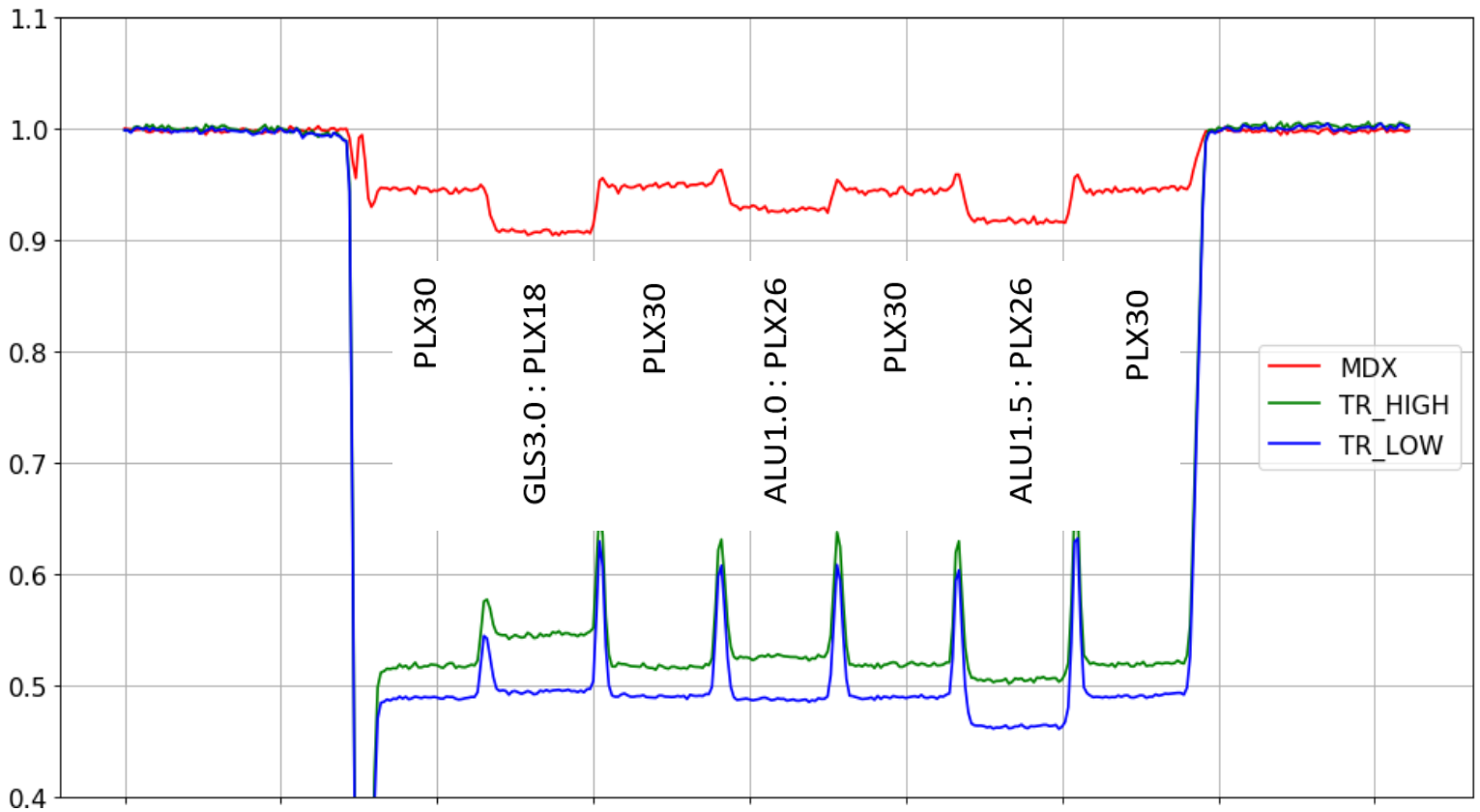

Conclusion

Combining CdTe detector with single photon counting frontend, on-chip TDI and MDX method

is a promising director for high throughput industrial X-raying.

The authors acknowledge funding from the National Science Center, Poland, contract No. UMO-2016/21/B/ST7/02228.

The authors acknowledge helping in test measurement from PID Polska Sp. z o.o. (special thanks to Konrad Choręgiewicz)