FSI qualification for Internal monitoring

Alignment review 2019

Vivien RUDE

2019-08-26

Outline

- **Internal monitoring**

- **Crab-Cavities project**

- **Dipole Test project**
  (Test for HL-LHC quadrupole)

Crab-Cavities in SPS accelerator

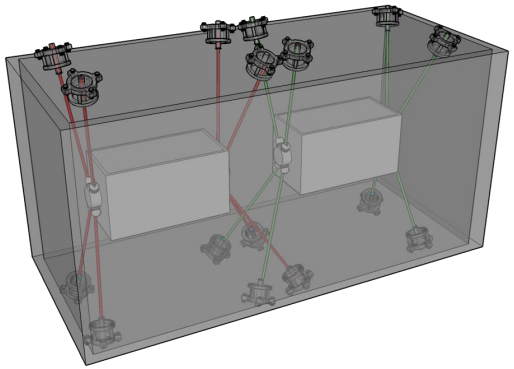

Dipole-test in SM18

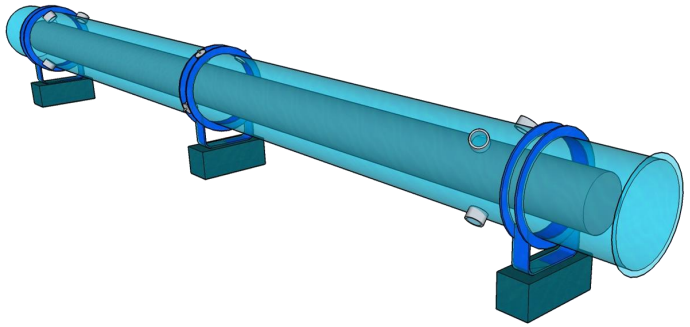

Internal monitoring

Objective : determine the position of inner component inside a vacuum vessel (Cryostat, Cryomodule)

Environment :

- Temperature : 1.9 K (Cryogenics conditions) ≈ - 271°C
- Vacuum : 10-6 mBar
- Radiation : 1 MGy / year

Accuracy :

- 0.1 mm w.r.t. vacuum vessel

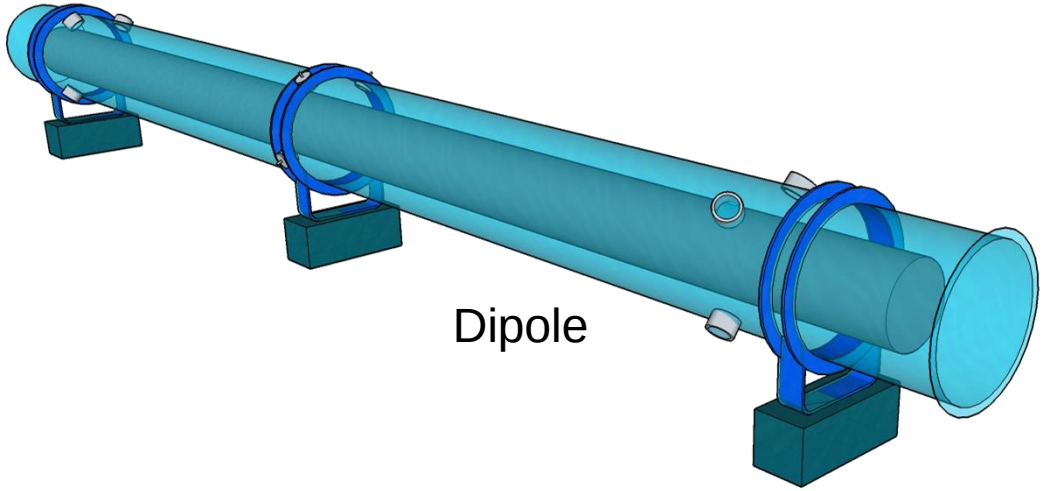

Dipole

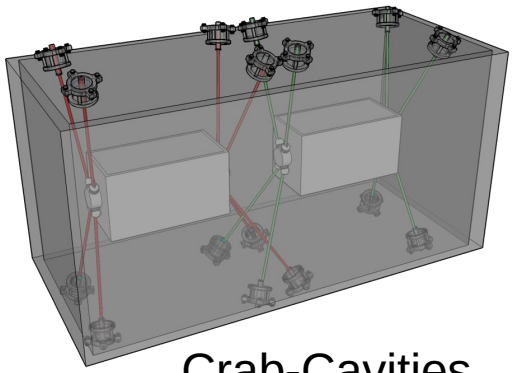

Crab-Cavities

FSI : Frequency Scanning Interferometry

Absolute distance measuring interferometric technique

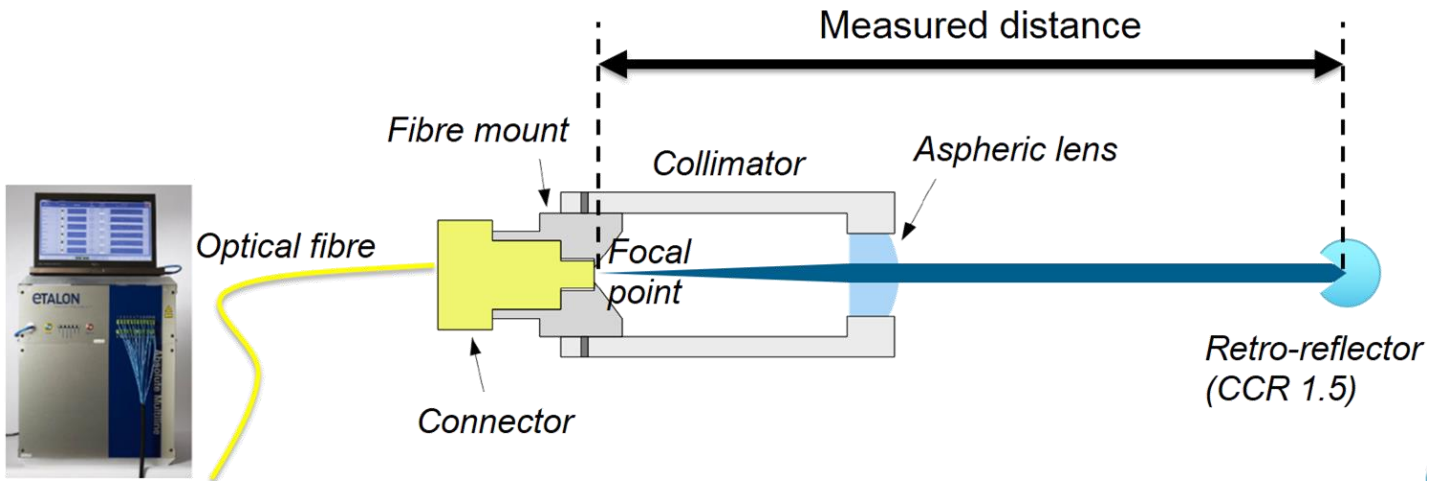

Accuracy :
0.5 µm per meter

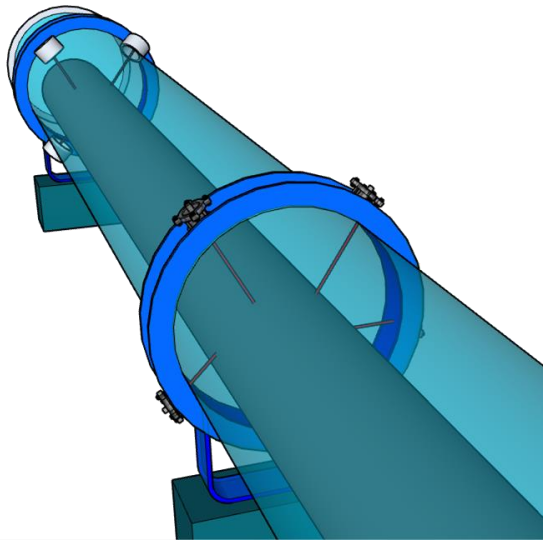

Crab-cavities project

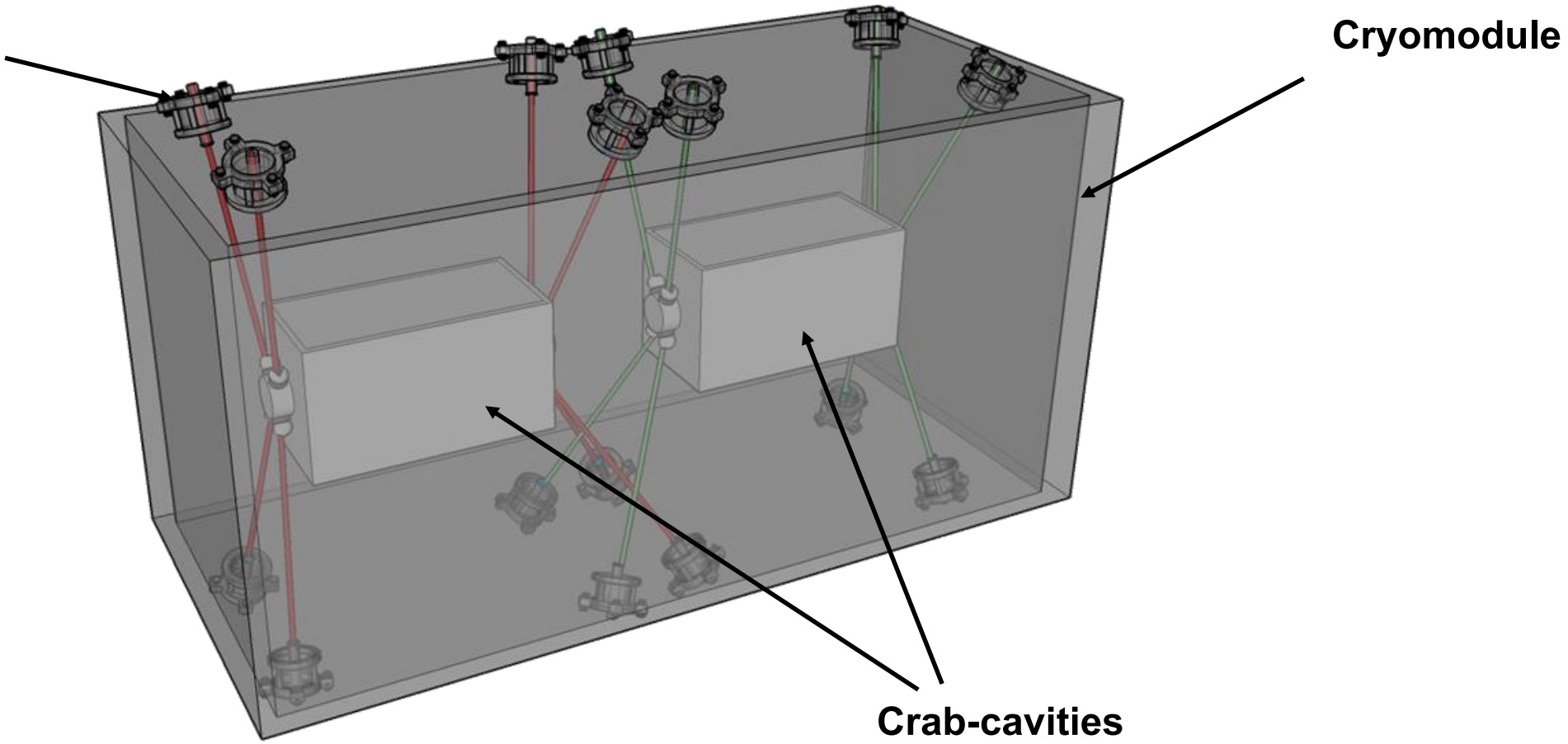

Configuration

8 FSI distances by Cavity for 7 unknowns

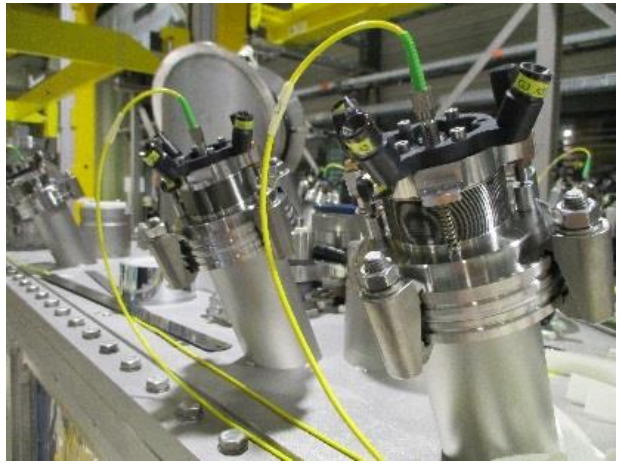

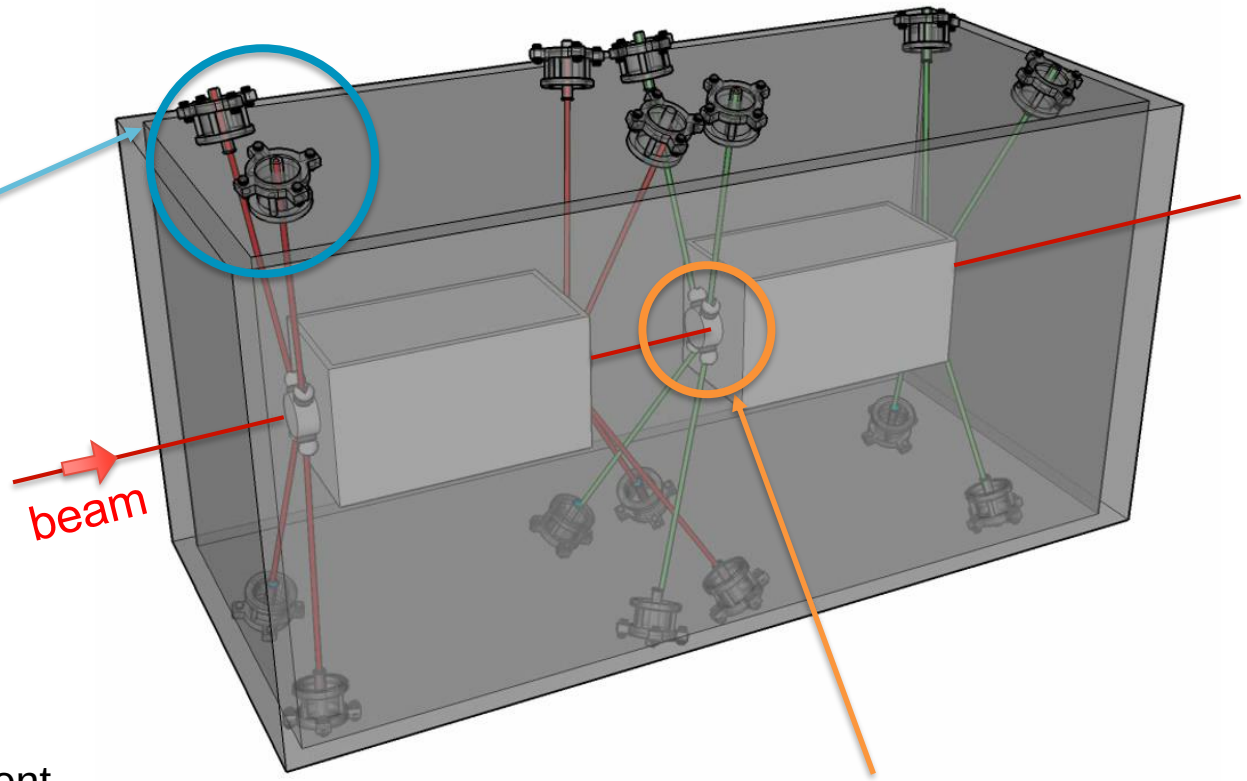

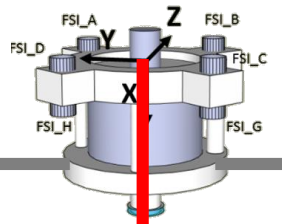

Cryomodule

- Vacuum : Ambient
- Temperature : Ambient

Thermal shielding

- Vacuum : 10^{-6} mbar
- Temperature : 4 K

Cavity

Validation at Warm condition

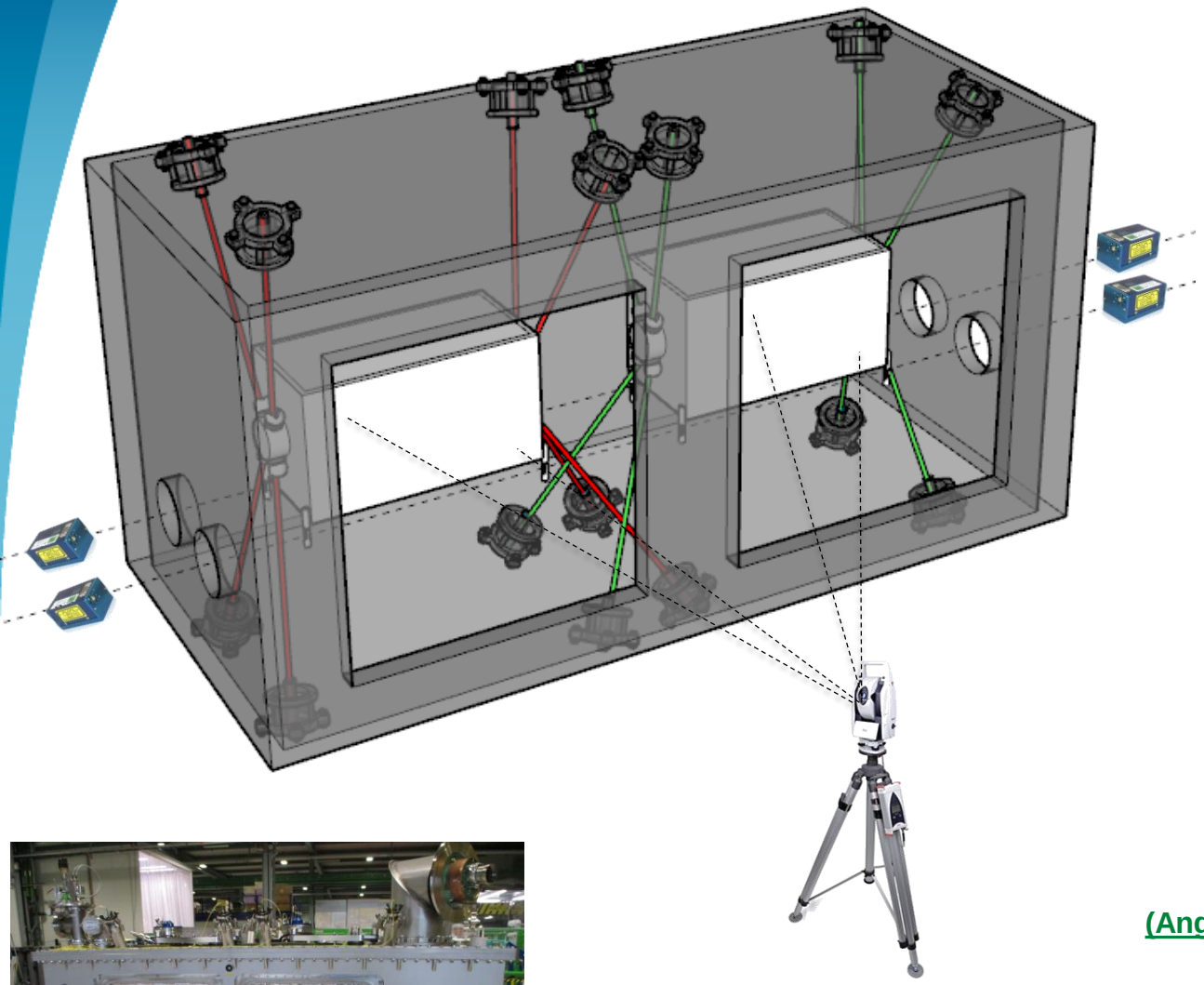

FSI
(absolute distances)

BCAM
(Angle measurements)

Laser Tracker
(Angles and distances measurements)

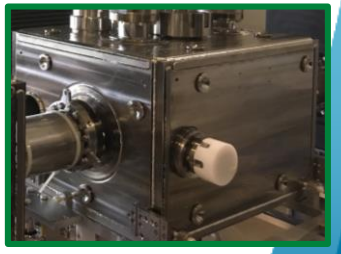

Intercomparison between FSI / BCAM / Laser Tracker (Before cooling down)

FSI, BCAM systems precision better than 50µm (1σ), crosschecked with AT401 laser tracker measurements

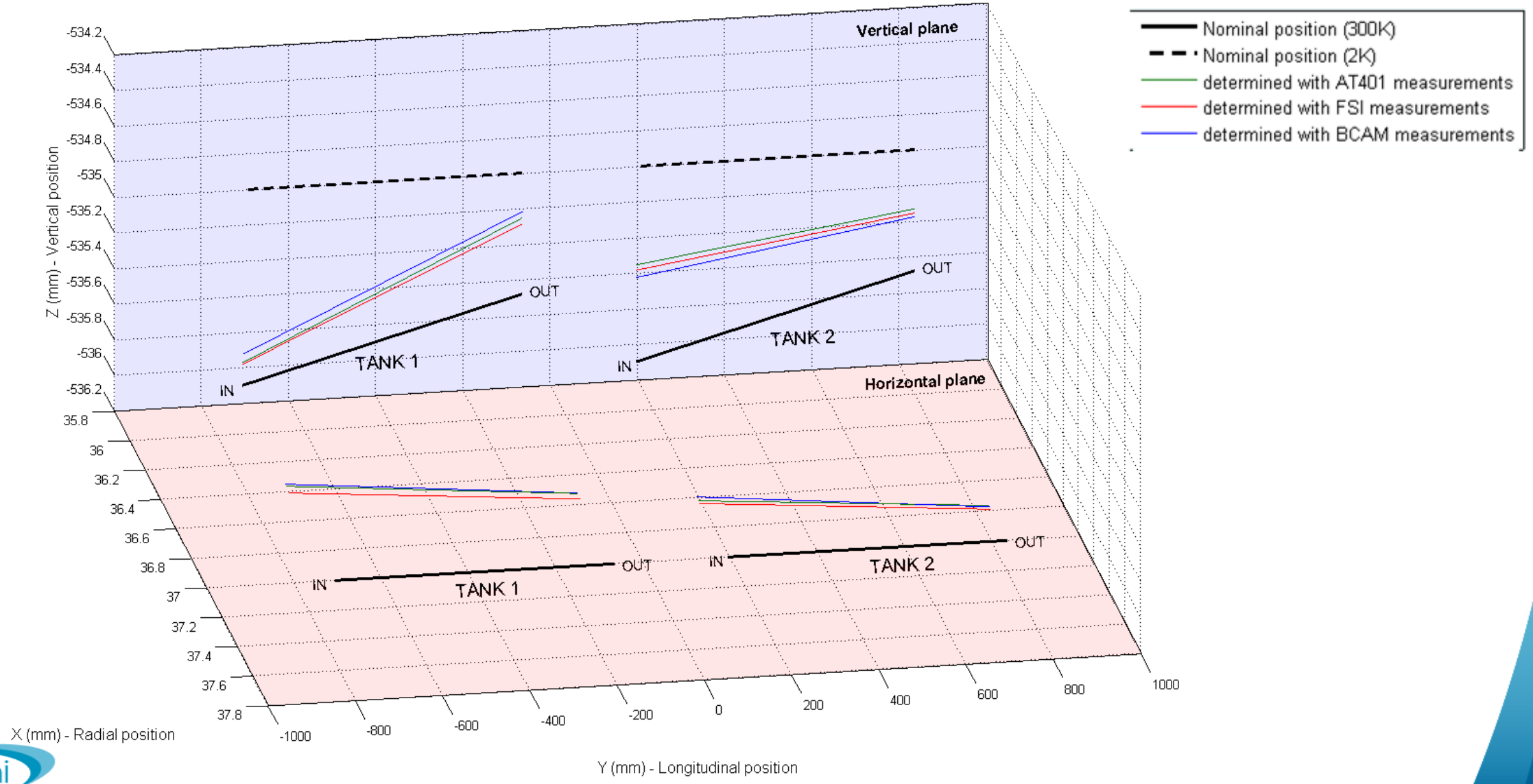

Cooling Down in SPS : From 293 K to 4K

Accuracy : < 50 µm (1σ)

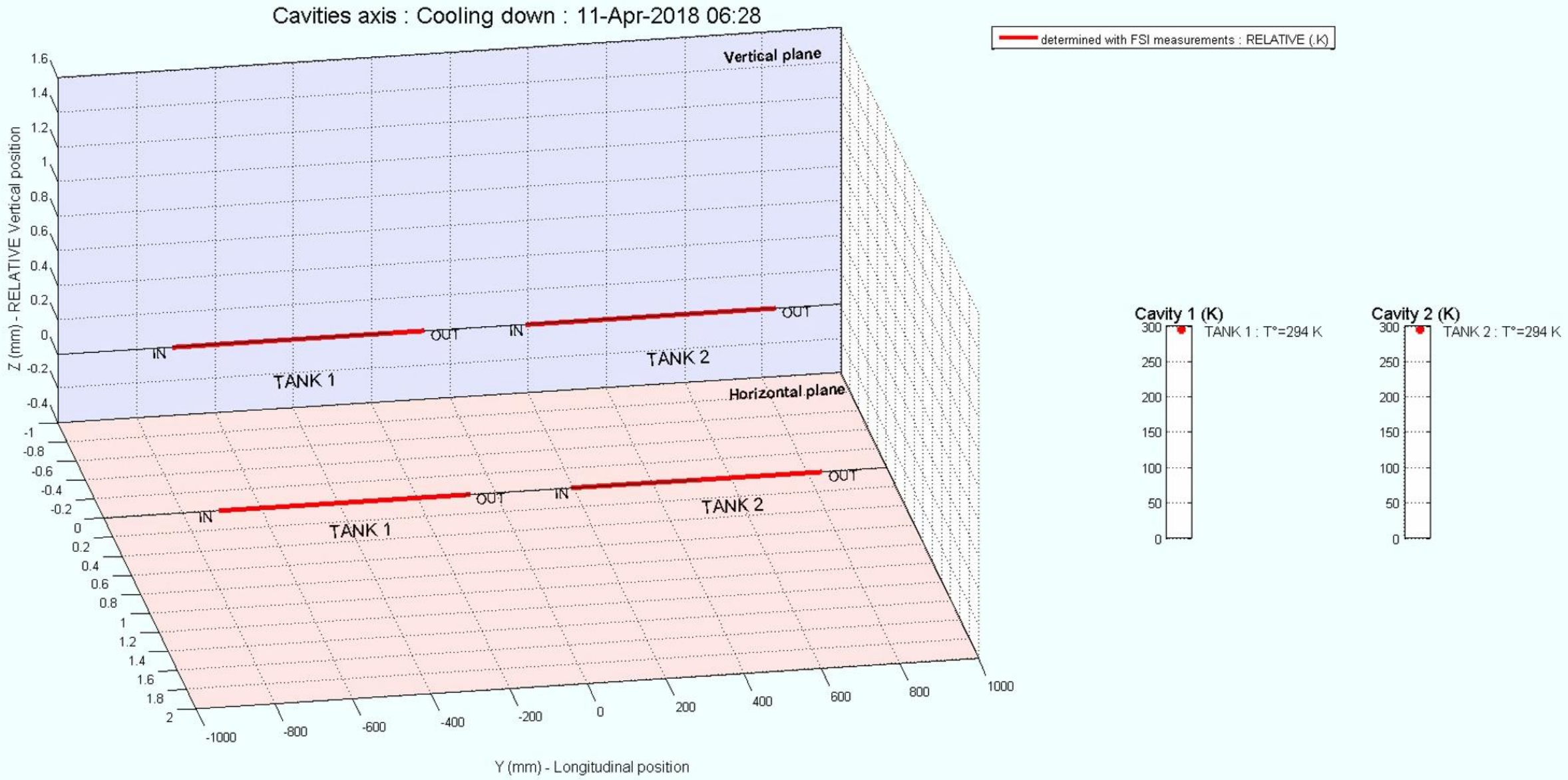

Intercomparison at Cold condition (FSI – BCAM)

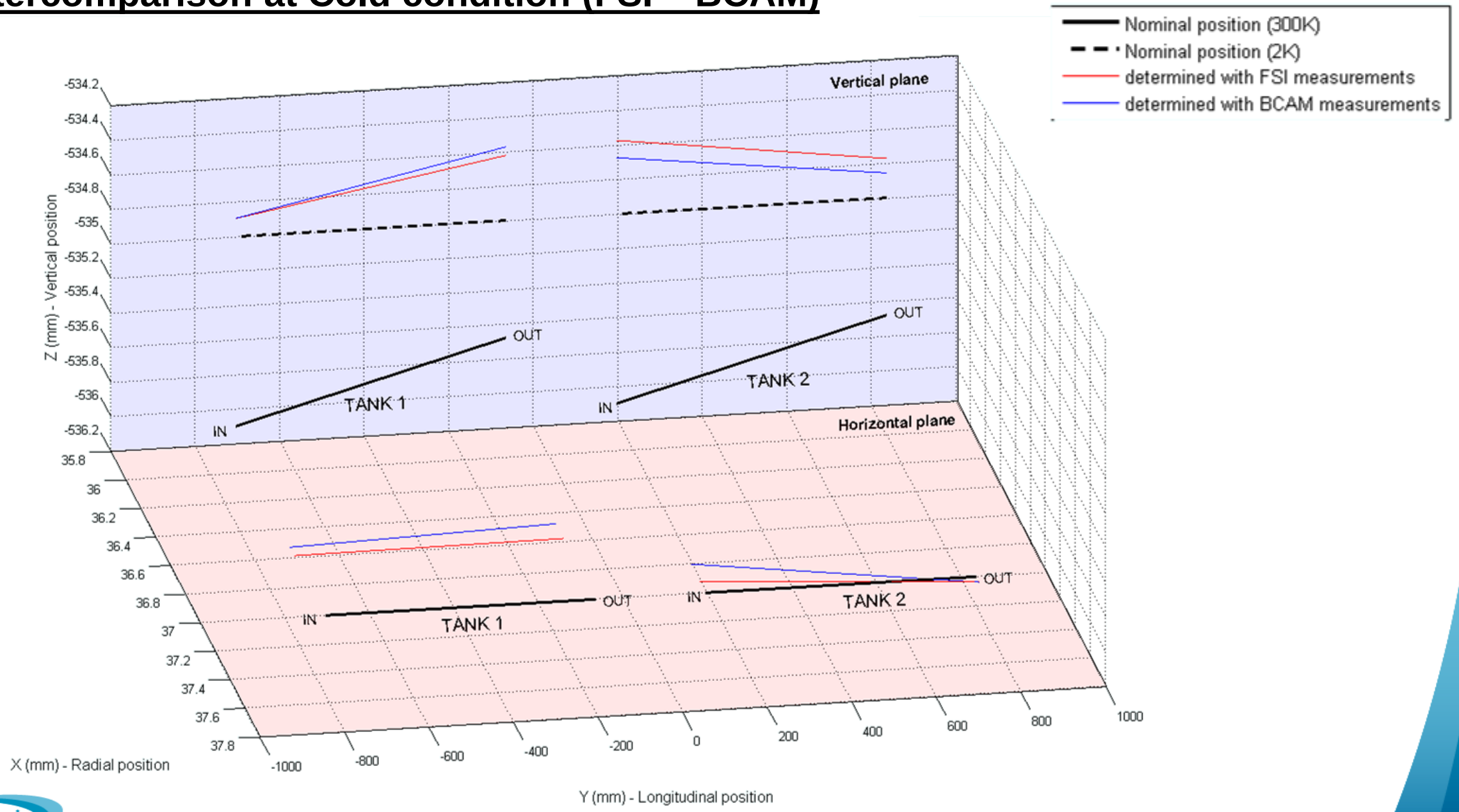

Long term stability

Since April 2018, the monitoring of the Crab-cavities worked correctly.

Parameter	Precision (1σ)
Tx (radial)	+/- 25 µm
Ty (longitudinal)	+/- 45 µm
Tz (vertical)	+/- 10 µm
Rx (pitch)	+/- 30 µrad
Ry (roll)	+/- 150 µrad
Rz (yaw)	+/- 70 µrad
Scale	+/- 60 ppm

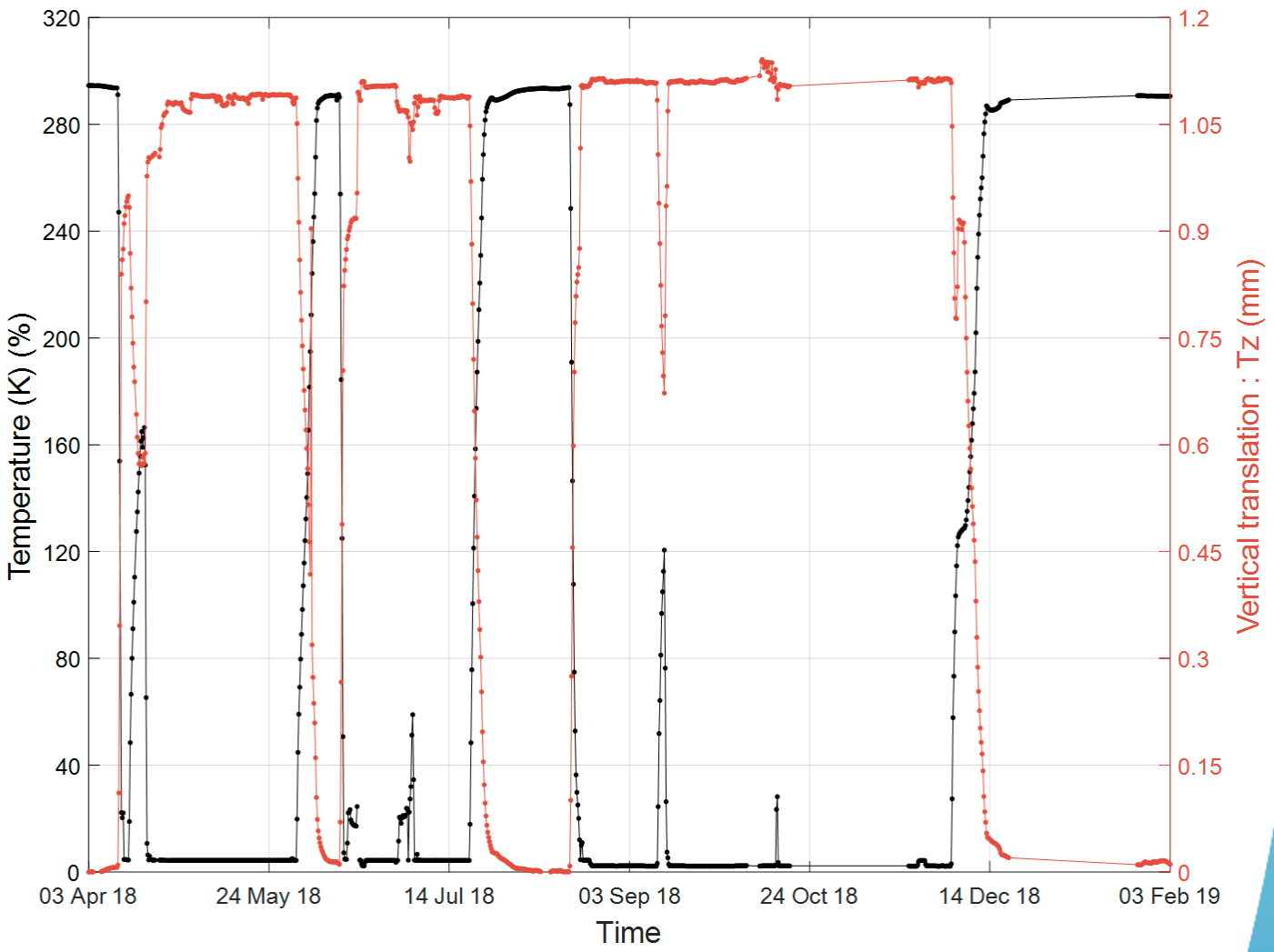

Redundancy :

- 8 observation for 7 unknowns → 1 degree of freedom
- If some optical sight views are not possible → Hypothesis (for example : Fixed Ry or Tx)

Dipole test

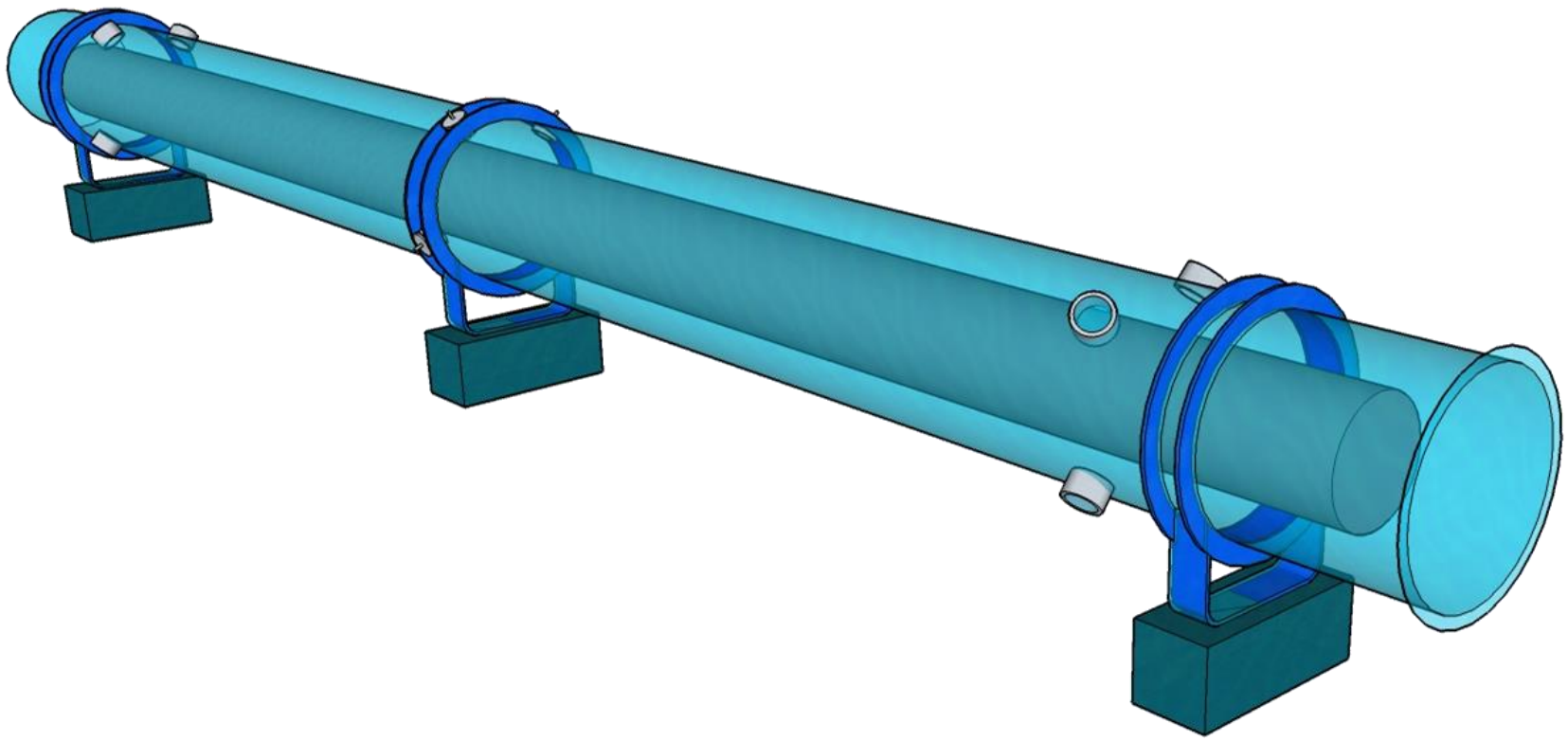

Objective

In order to validate the internal monitoring solution for the Low-Beta quadrupoles, a dipole has been used as test setup.

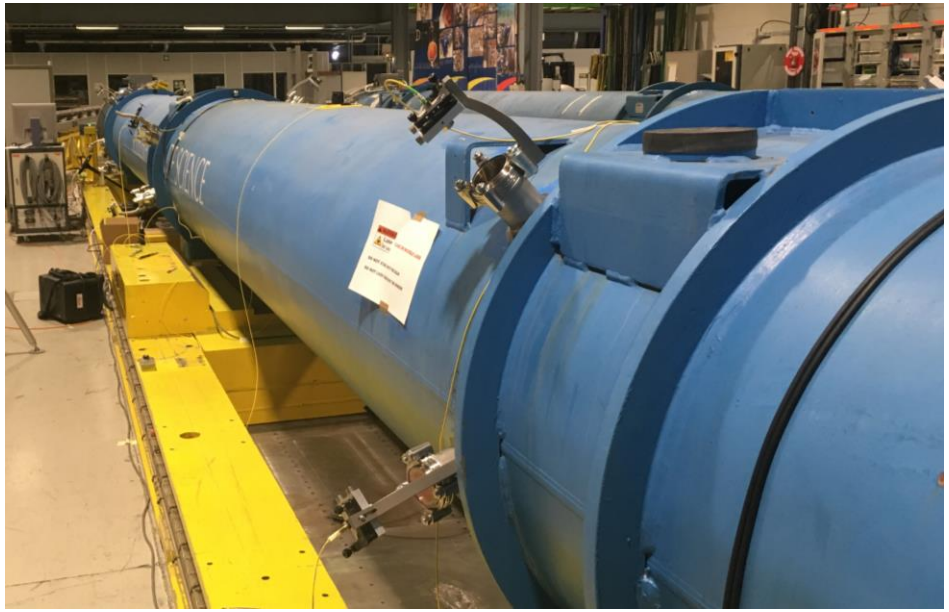

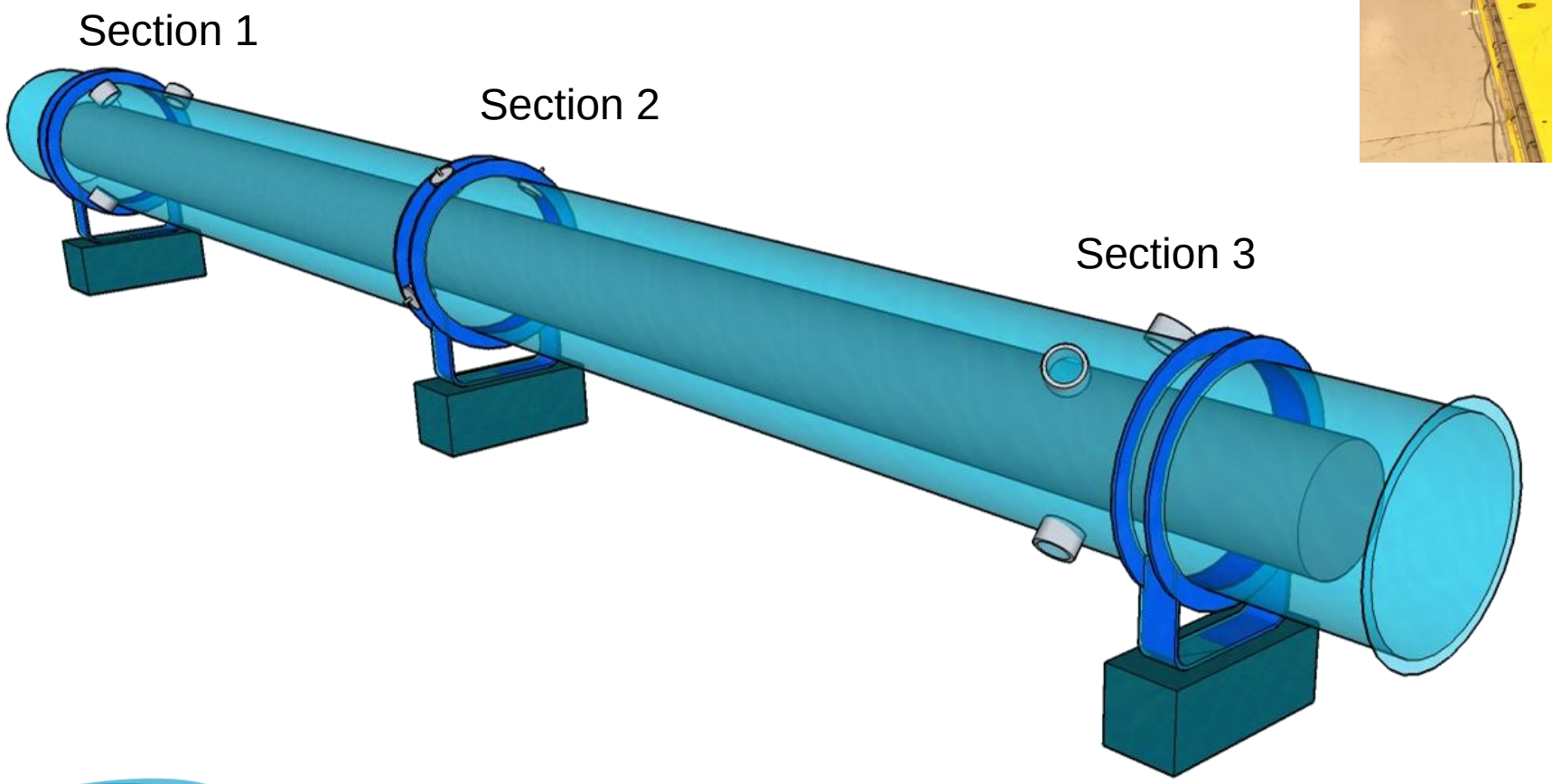

- Vacuum : 10^{-6} mbar
- Temperature : 1.9 K

Configuration

Long object (15 m) → Cryostat and cold mass may not be considered as rigid body → Measurement on 3 sections

Deformation up to 0.25 mm has been observed
on the cryostat and the cold mass
during transport and during cool down

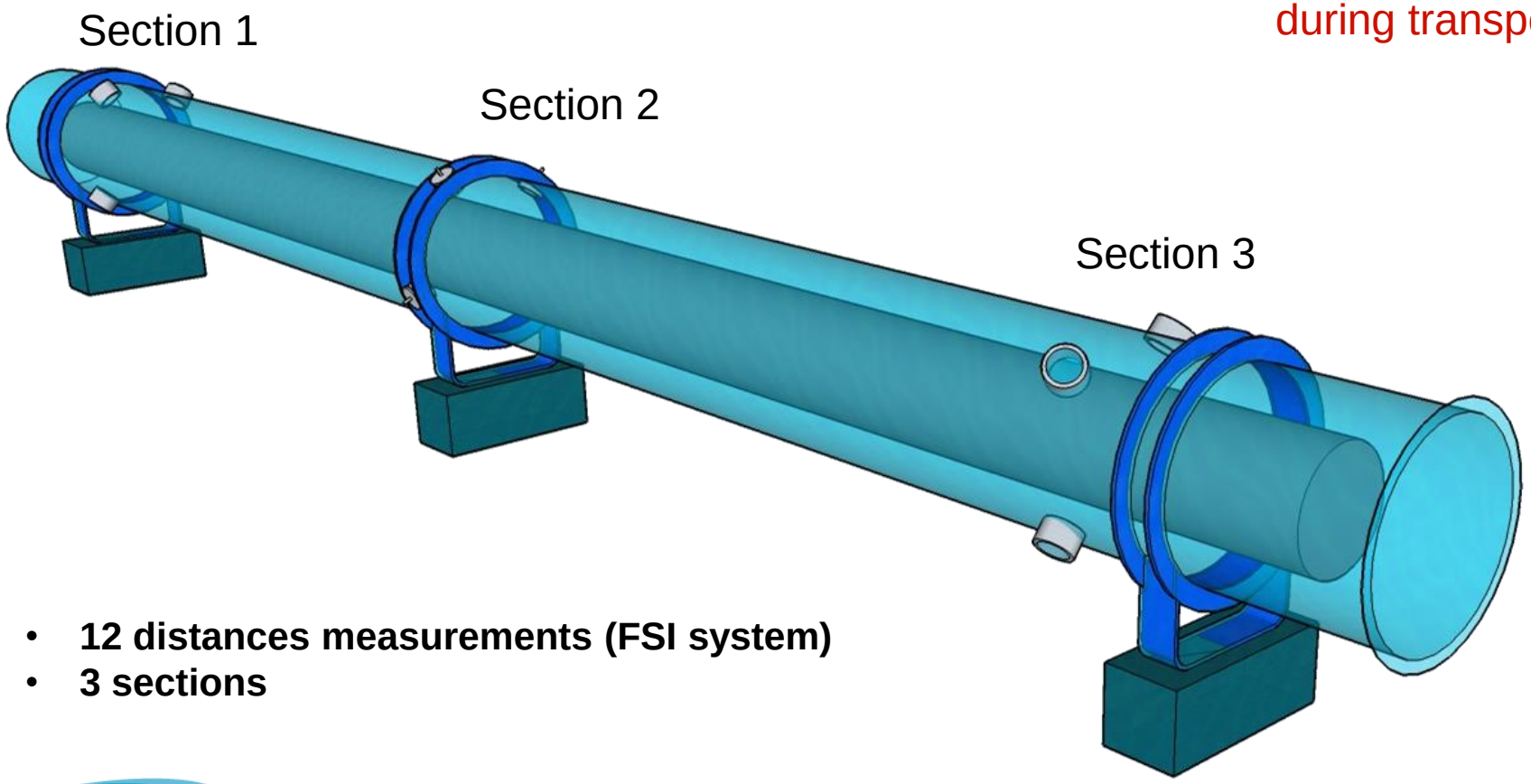

- **12 distances measurements (FSI system)**
- **3 sections**

Summary of first tests (2017 - 2018)

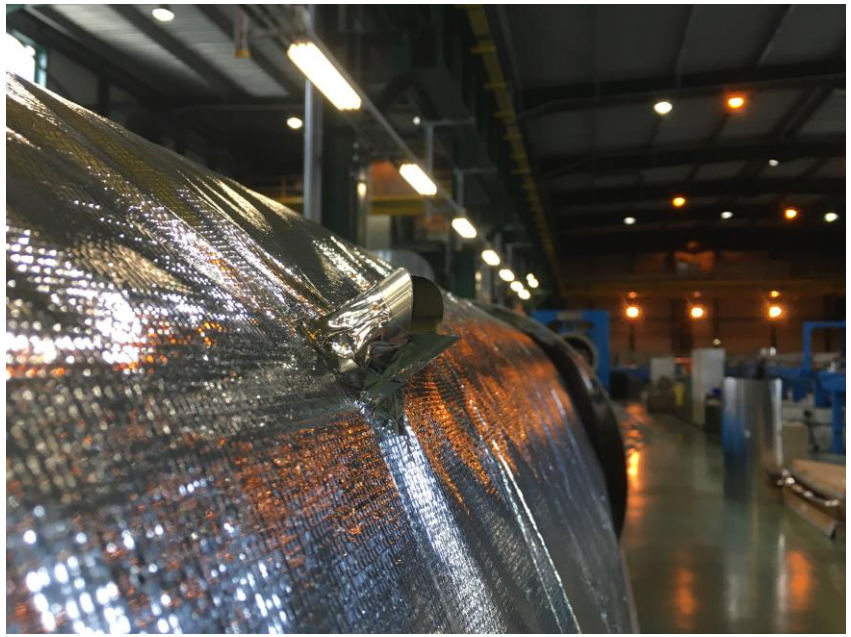

Cryo-condensation

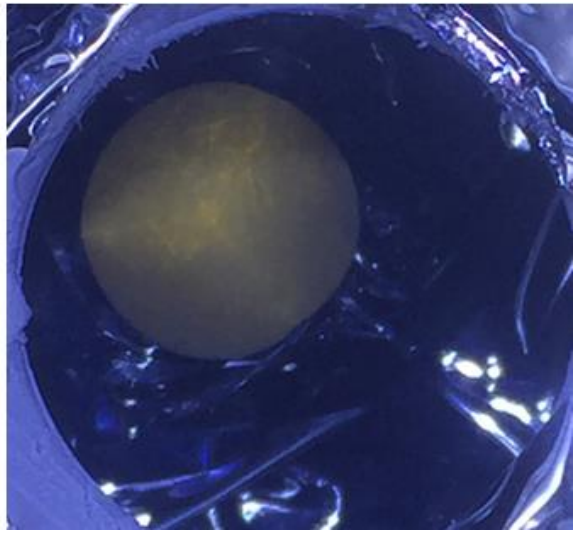

- Cryo-condensation on the laser reflectors is a main showstopper for optical distance measurements in “dusty” cryostat

Insulated support

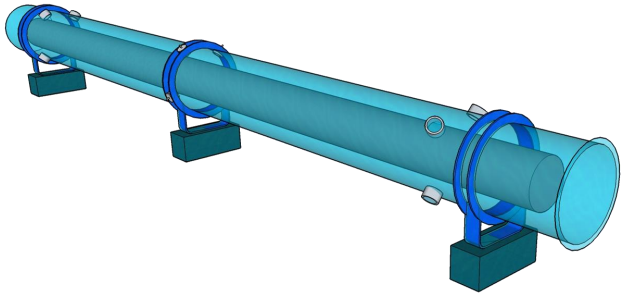

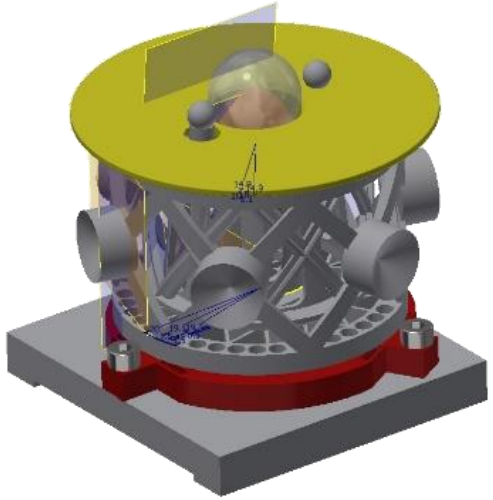

Test summary (end 2018)

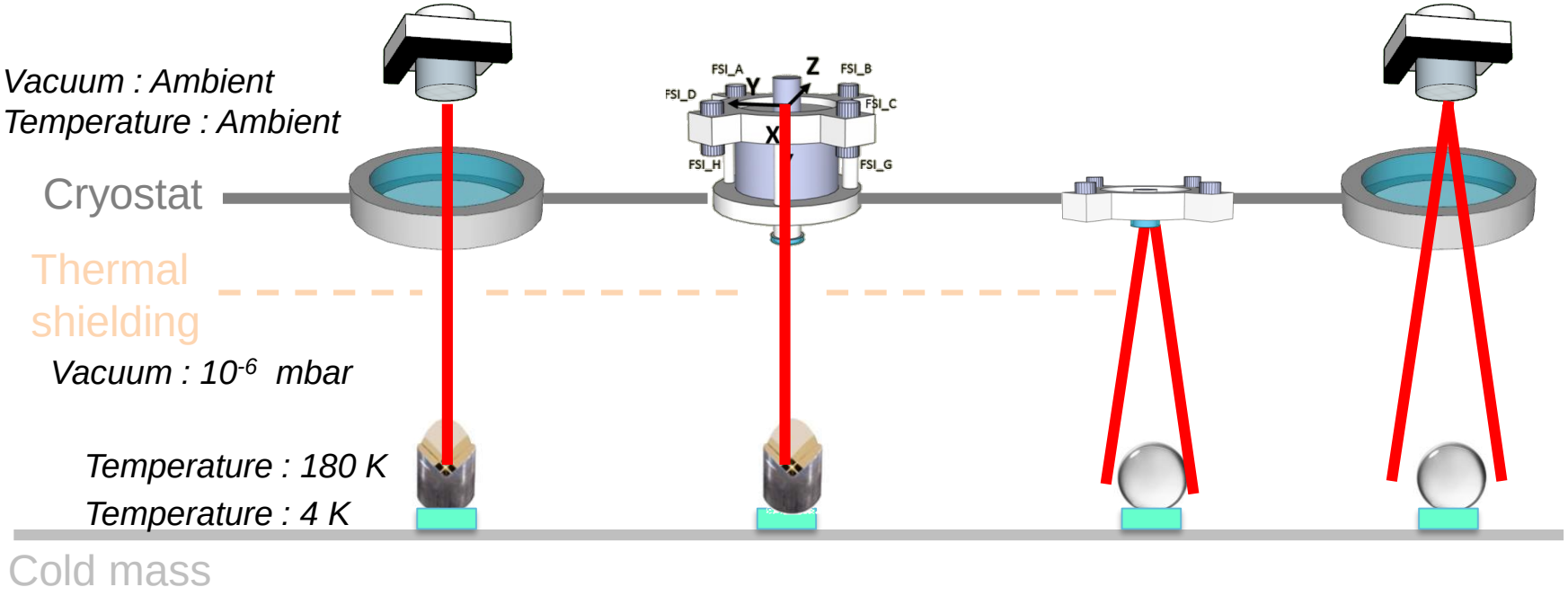

Acquisition system : FSI
Commercial : Etalon
Multi-Targets : CERN

FSI Head
Feedthrough (adjustable)
Feedthrough (fixed)
Window

Collimator
Parallel lens
Divergent collimator

Targets
Newport reflector (3 mirrors)
Glass sphere without coating
Glass sphere with coating

Target Support
Insulated target
Nothing

Schedule

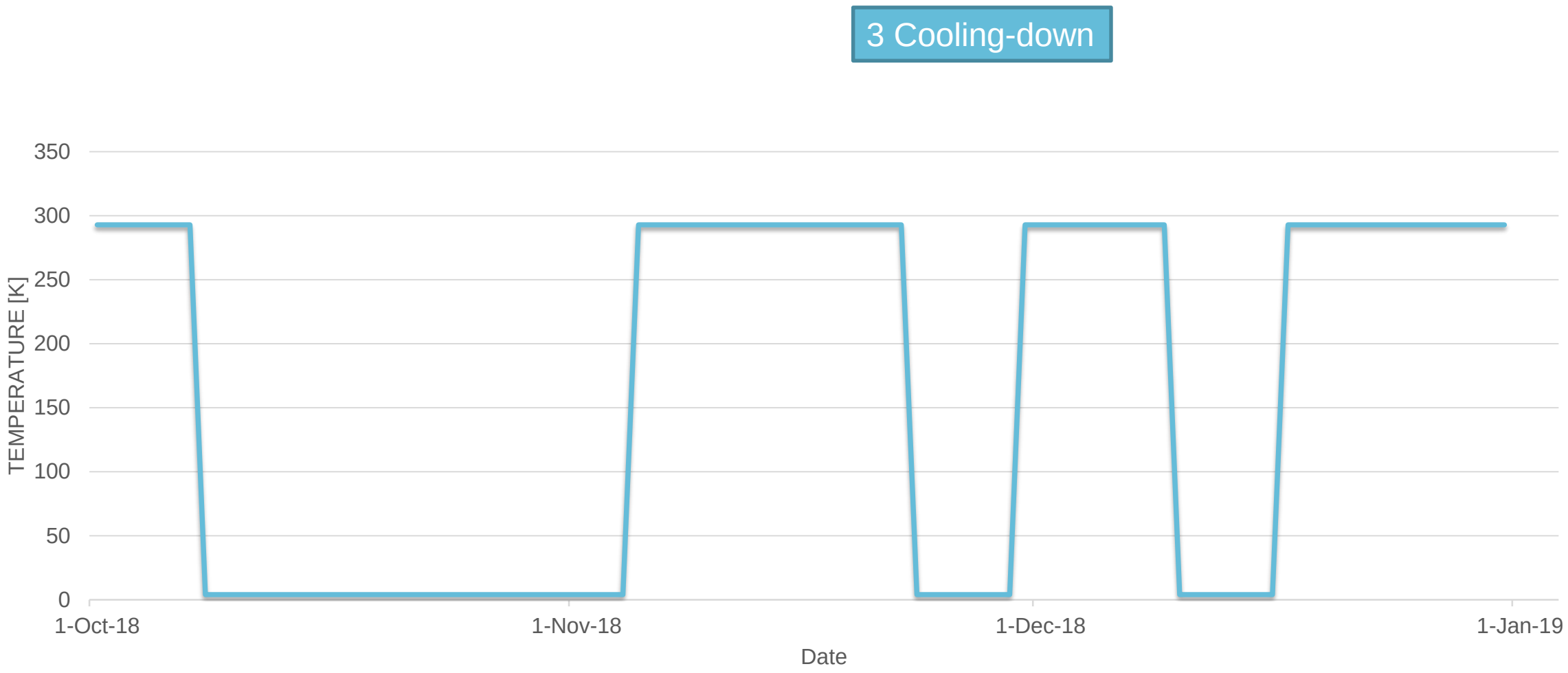
3 Cooling-down
350
300
250
200
150
100
50
0
TEMPERATURE [K]
1-Oct-18
1-Nov-18
1-Dec-18
1-Jan-19
Date

Section 1

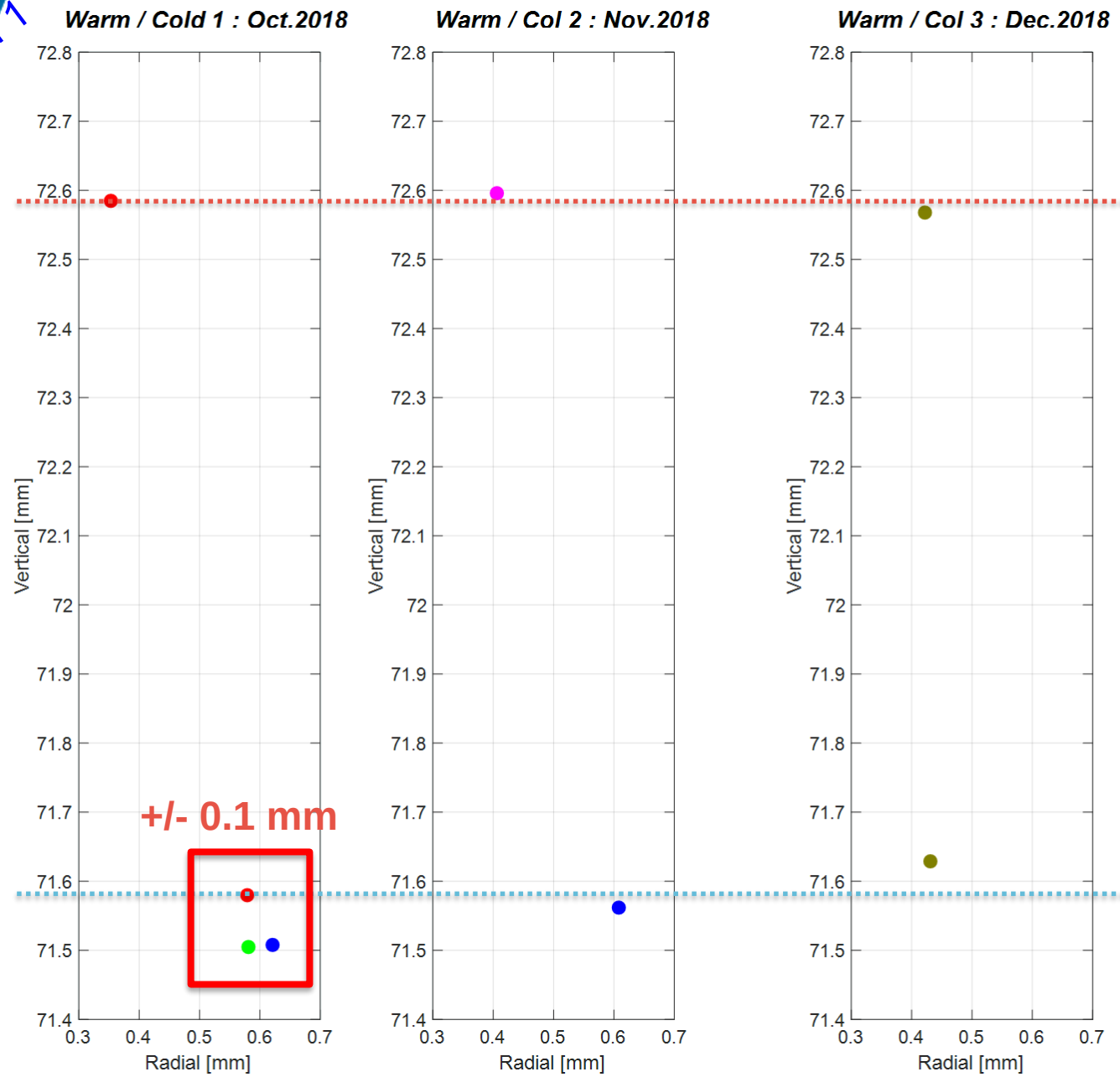

WARM (293 K)

Section 1

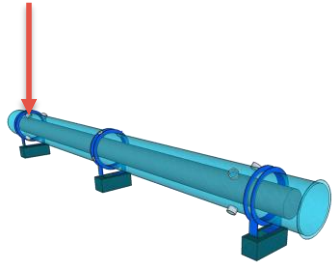

COLD (4K)

Legend

- ETALON (FSI)
- Window (crossing)
- Newport prism

- Laser tacker
- Newport prism / Glass sphere

- MT-FSI
- Window (crossing)
- Glass sphere

- MT-FSI
- Window (crossing)
- Newport prism

- ETALON (FSI)
- Window (crossing)
- Glass sphere with coating

- MT-FSI
- Window (crossing)
- Glass sphere with coating

- MT-FSI
- Feedthrough
- Glass sphere with coating

Section 2

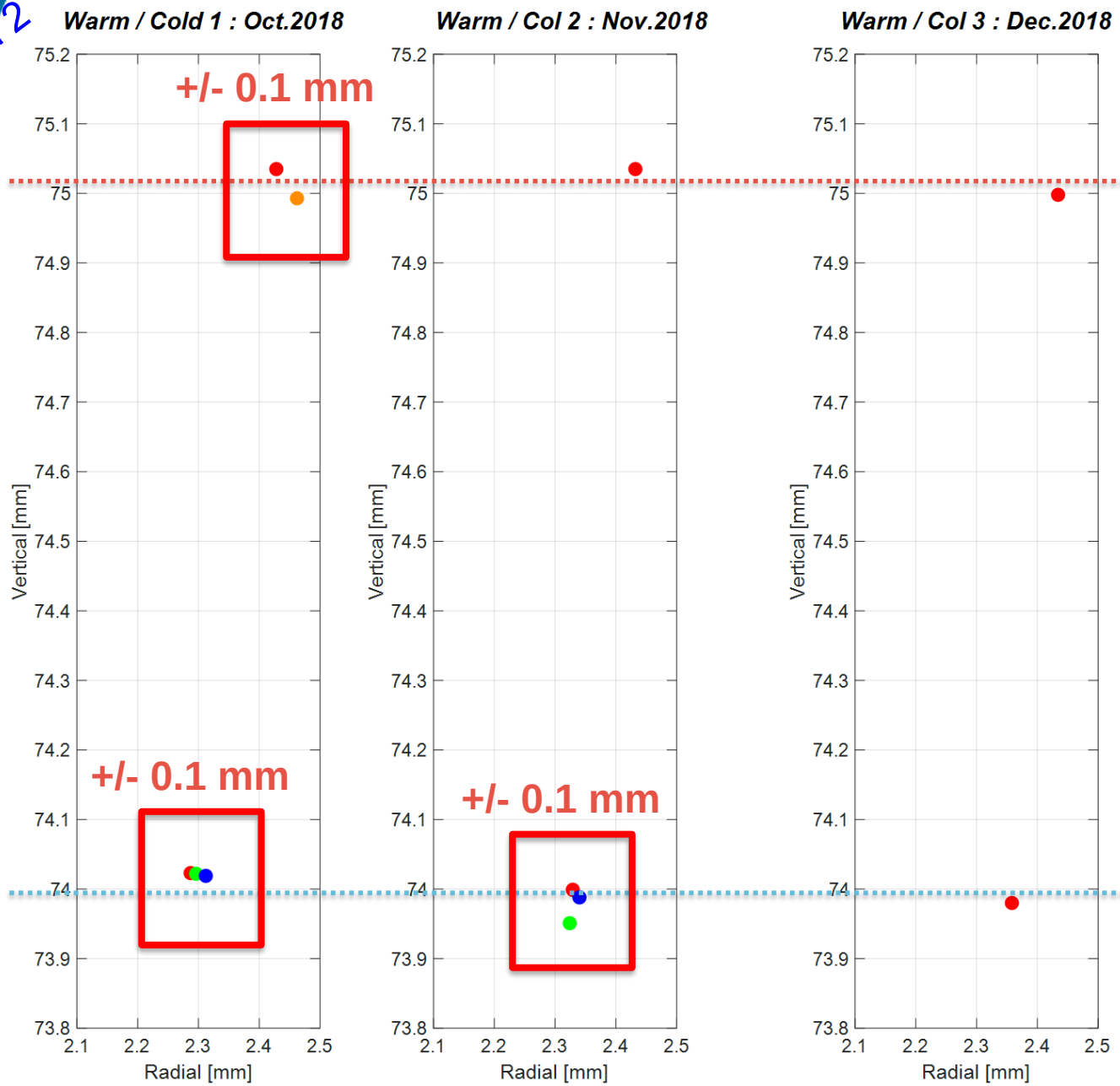

WARM (293 K)

COLD (4K)

Section 2

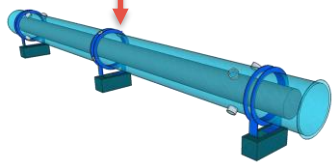

Legend

- ETALON (FSI)
- Window (crossing)
- Newport prism

- Laser tacker
- Newport prism / Glass sphere

- MT-FSI
- Window (crossing)
- Glass sphere

- MT-FSI
- Window (crossing)
- Newport prism

- ETALON (FSI)
- Window (crossing)
- Glass sphere with coating

- MT-FSI
- Window (crossing)
- Glass sphere with coating

- MT-FSI
- Feedthrough
- Glass sphere with coating

Section 3

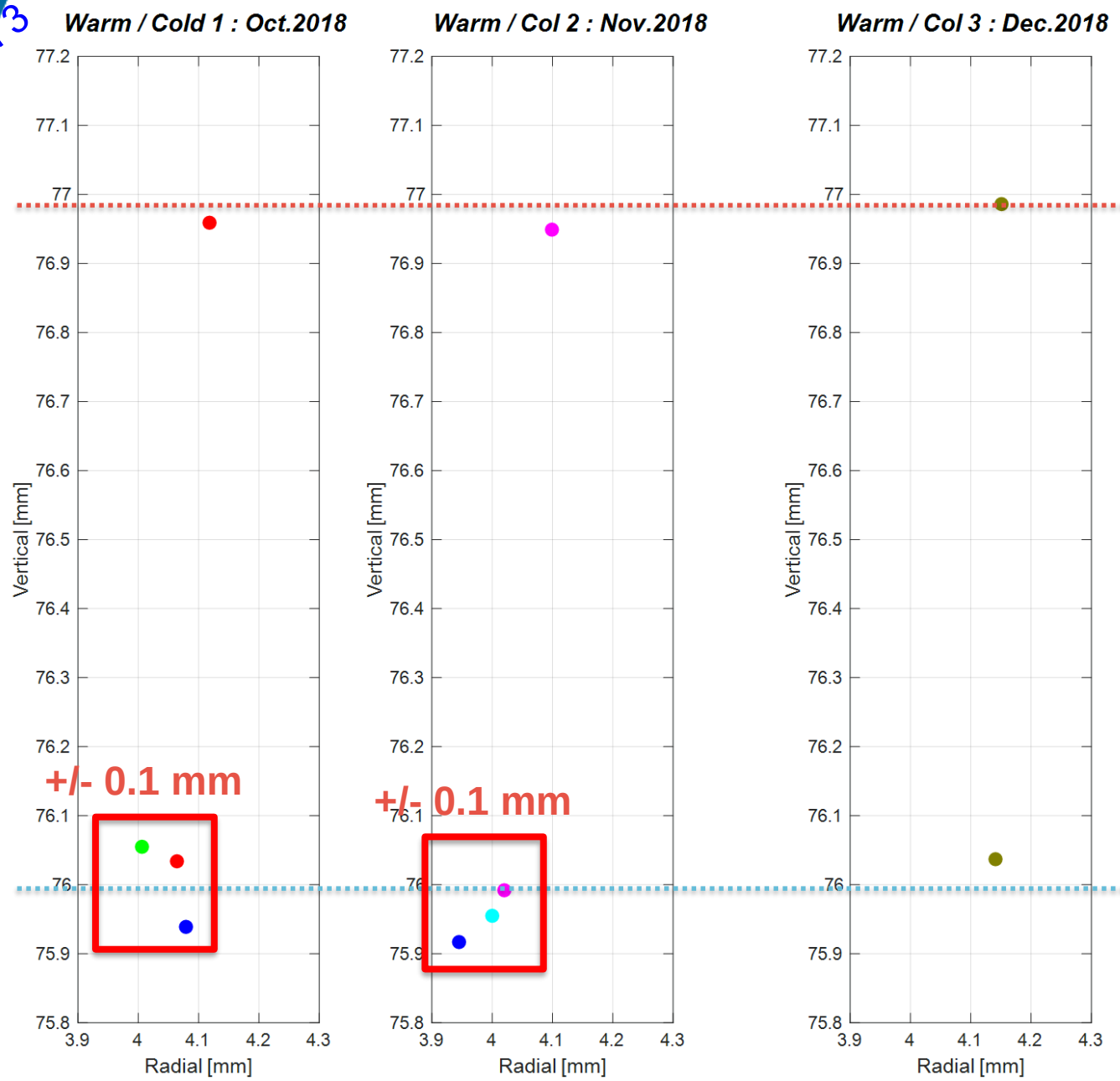

WARM (293 K)

COLD (4K)

Section 3

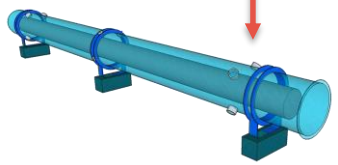

Legend

- ETALON (FSI)
- Window (crossing)
- Newport prism

- Laser tacker
- Newport prism / Glass sphere

- MT-FSI
- Window (crossing)
- Glass sphere

- MT-FSI
- Window (crossing)
- Newport prism

- ETALON (FSI)
- Window (crossing)
- Glass sphere with coating

- MT-FSI
- Window (crossing)
- Glass sphere with coating

- MT-FSI
- Feedthrough
- Glass sphere with coating

Conclusion

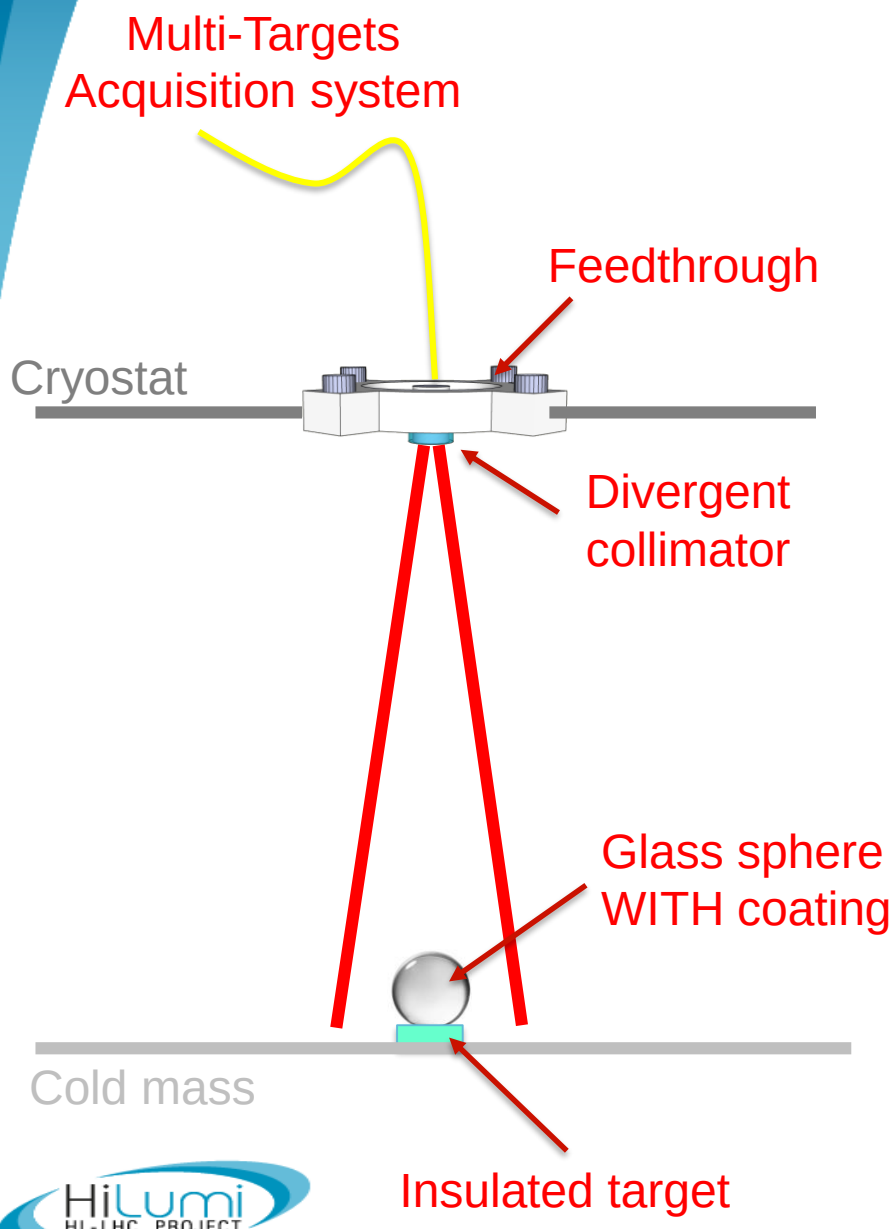

Acquisition system : FSI
Commercial : Etalon
Multi-Targets : CERN

Targets
Newport reflector (3 mirrors)
Glass sphere without coating
Glass sphere with coating

FSI Head
Feedthrough (adjustable)
Feedthrough (fixed)
Window

Target Support
Insulated target
Nothing

Collimator
Parallel lens
Divergent collimator

Internal monitoring

Crab-cavity

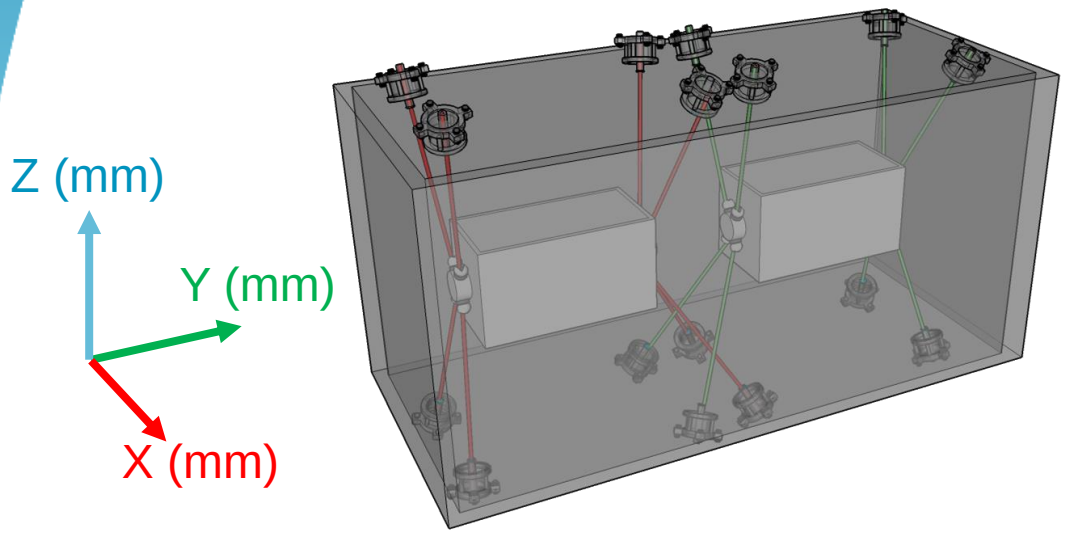

Parameter	Precision (1σ)
Tx (radial)	**+/- 25 µm**
Ty (longitudinal)	**+/- 45 µm**
Tz (vertical)	**+/- 10 µm**
Rx (pitch)	+/- 30 µrad
Ry (roll)	+/- 150 µrad
Rz (yaw)	+/- 70 µrad
Scale	+/- 60 ppm

Triplet

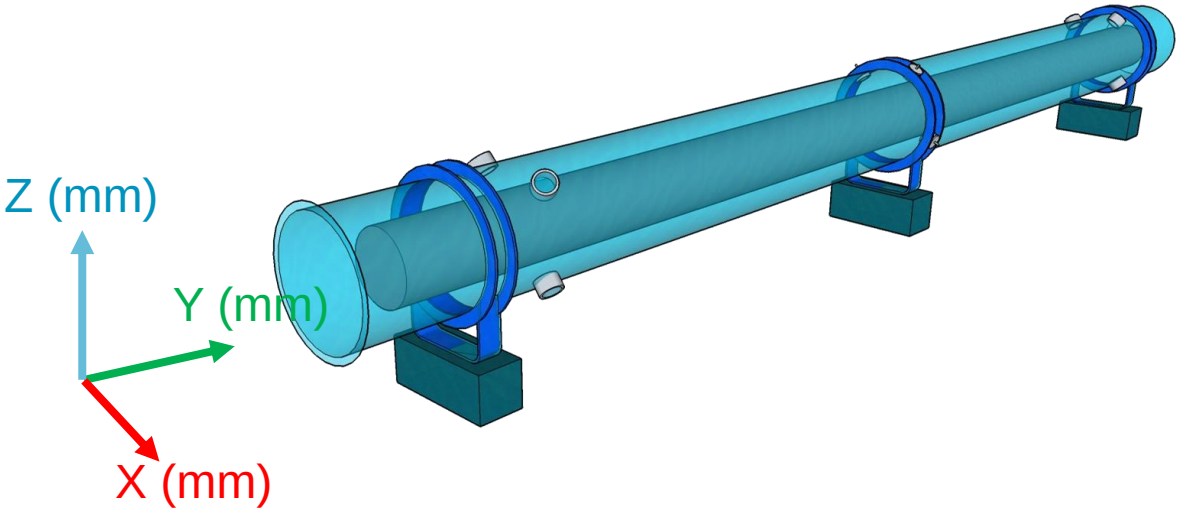

Parameter	Precision (1σ)
Tx (radial)	**+/- 50 µm**
Ty (longitudinal)	**+/- 55 µm**
Tz (vertical)	**+/- 15 µm**
Rx (pitch)	+/- 5 µrad
Ry (roll)	+/- 1500 µrad
Rz (yaw)	+/- 5 µrad
Scale	+/- 10 ppm

Thank you for your attention

On behalf of :

- Mateusz Sosin
- Hélène Mainaud Durand
- Thibault Dijoud
- Mathieu Duquenne
- Anna Zemanek
- Kacper Widuck
- Jan Gabka

HiLumi
HL-LHC PROJECT

SPARE

Section 1

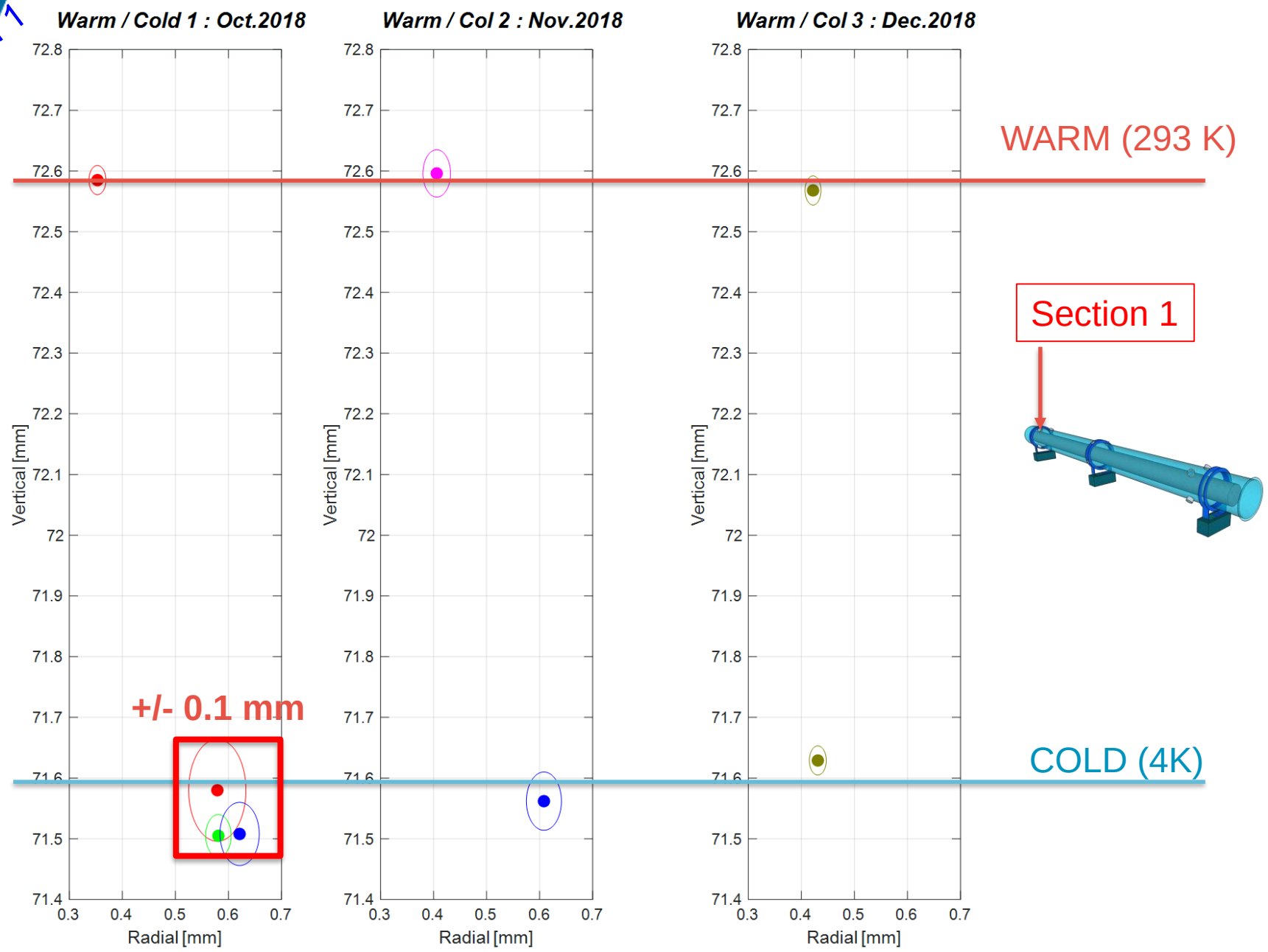

Section 1

Legend

- ETALON (commercial)
- Window (crossing)
- Newport prism

- Laser tacker
- Newport prism / Glass sphere

- Multi-targets
- Window (crossing)
- Glass sphere

- Multi-targets
- Window (crossing)
- Newport prism

- ETALON (commercial)
- Window (crossing)
- Glass sphere with coating

- Multi-targets
- Window (crossing)
- Glass sphere with coating

- Multi-targets
- Feedthrough
- Glass sphere with coating

Section 2

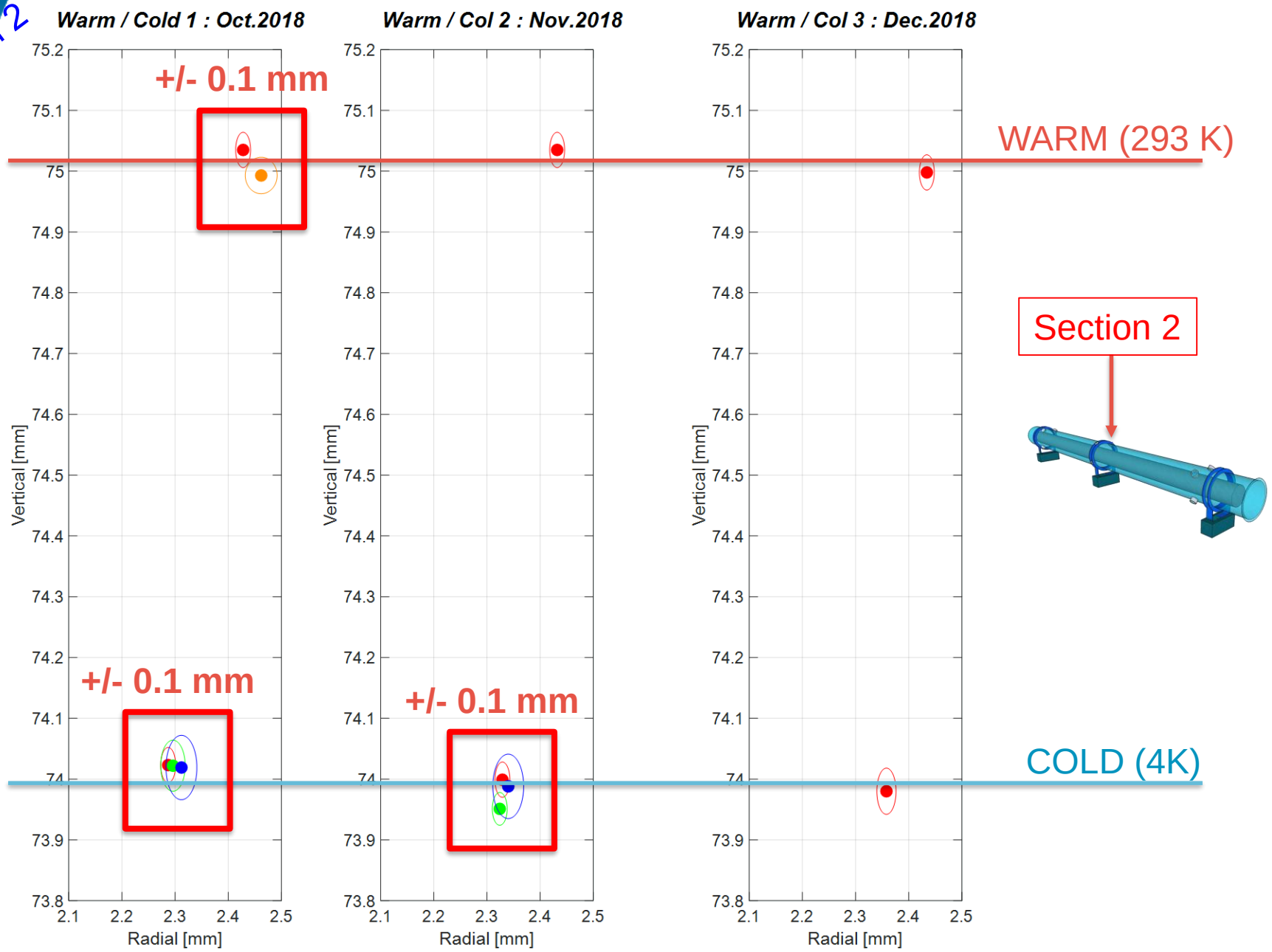

Section 2

Legend

- ETALON (commercial)
- Window (crossing)
- Newport prism

- Laser tacker
- Newport prism / Glass sphere

- Multi-targets
- Window (crossing)
- Glass sphere

- Multi-targets
- Window (crossing)
- Newport prism

- ETALON (commercial)
- Window (crossing)
- Glass sphere with coating

- Multi-targets
- Window (crossing)
- Glass sphere with coating

- Multi-targets
- Feedthrough
- Glass sphere with coating

Section 3

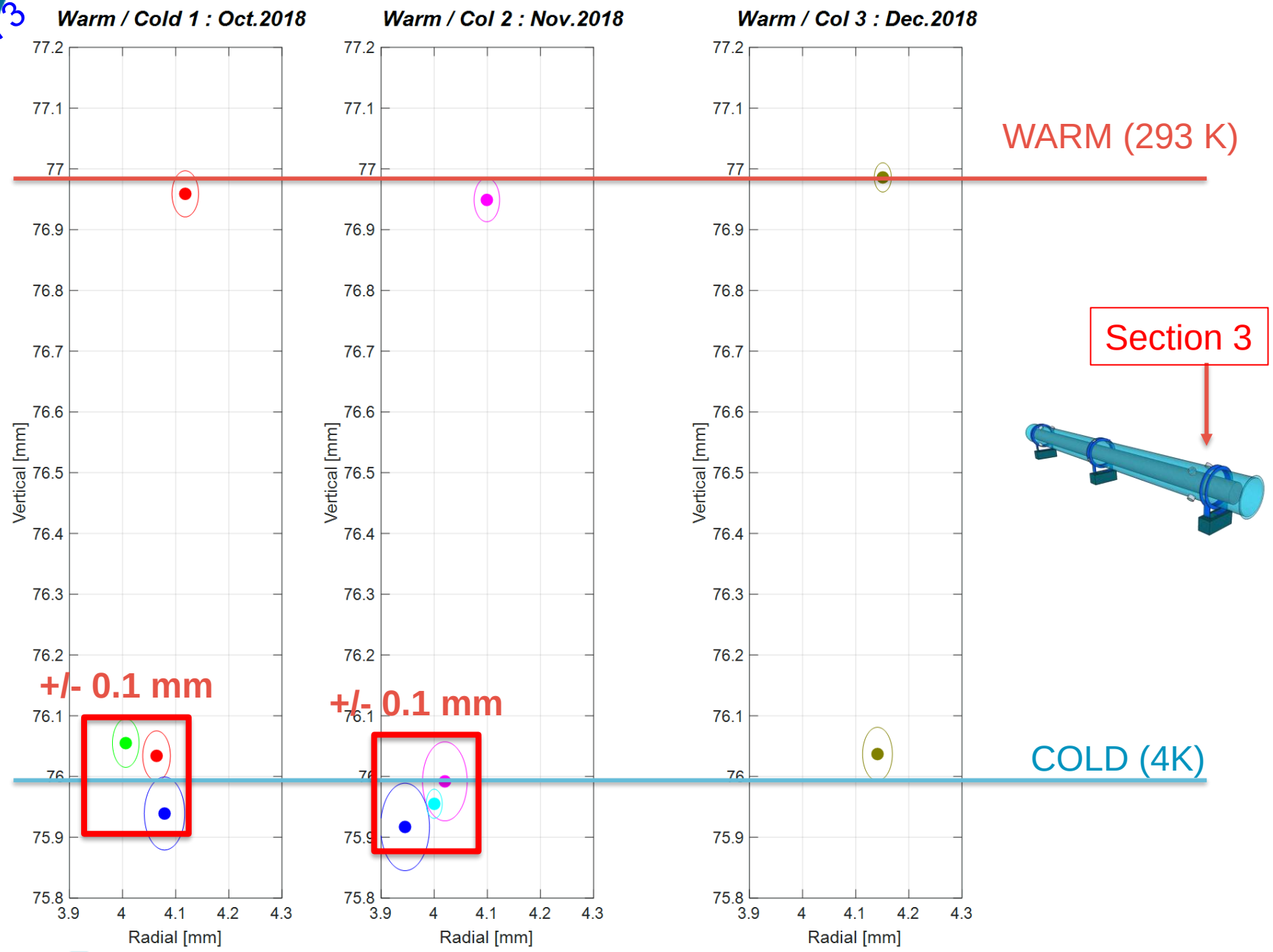

Section 3

Legend

- ETALON (commercial)
- Window (crossing)
- Newport prism

- Laser tacker
- Newport prism / Glass sphere

- Multi-targets
- Window (crossing)
- Glass sphere

- Multi-targets
- Window (crossing)
- Newport prism

- ETALON (commercial)
- Window (crossing)
- Glass sphere with coating

- Multi-targets
- Window (crossing)
- Glass sphere with coating

- Multi-targets
- Feedthrough
- Glass sphere with coating

Thermal contraction : From 293 K to 4 K

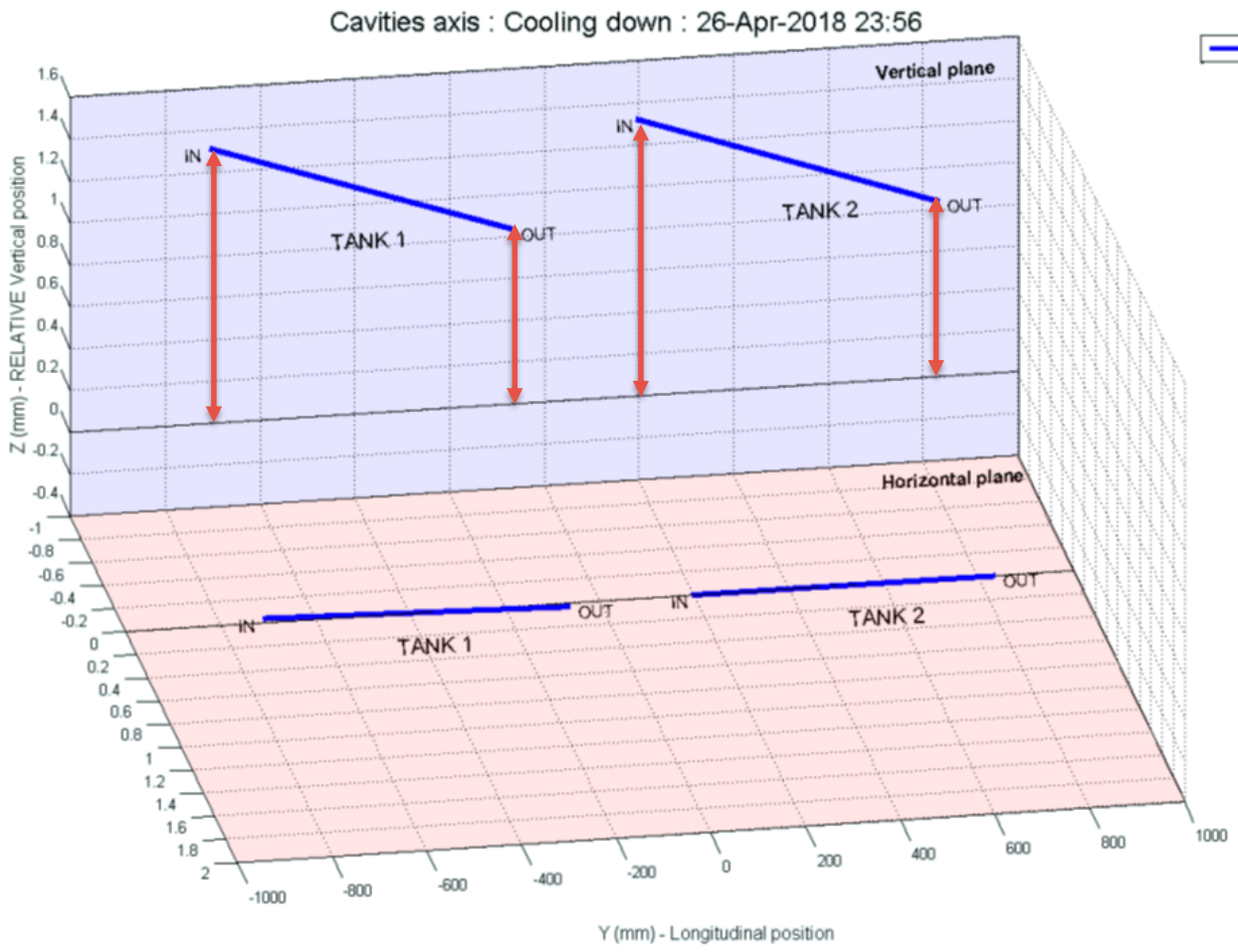

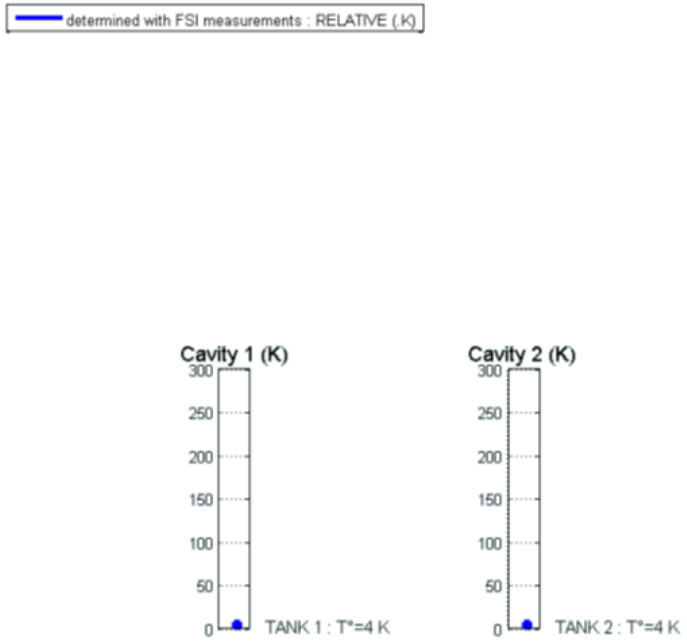

CONTRACTION	Cav 1		Cav 2	
	IN (mm)	OUT (mm)	IN (mm)	OUT (mm)
Simulation	1.097	0.678	1.097	0.678
SM18	1.321	0.843	1.295	0.832
SPS	1.310	0.834	1.320	0.835

Calculation

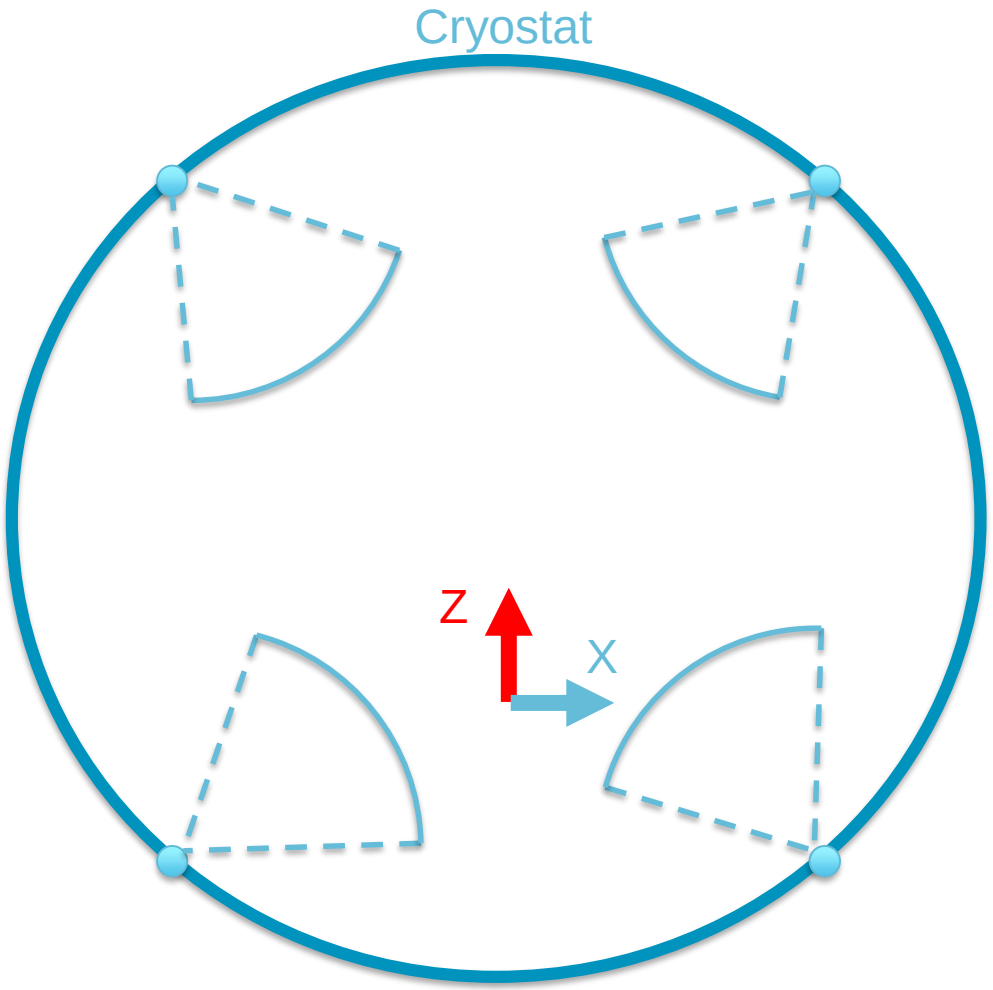

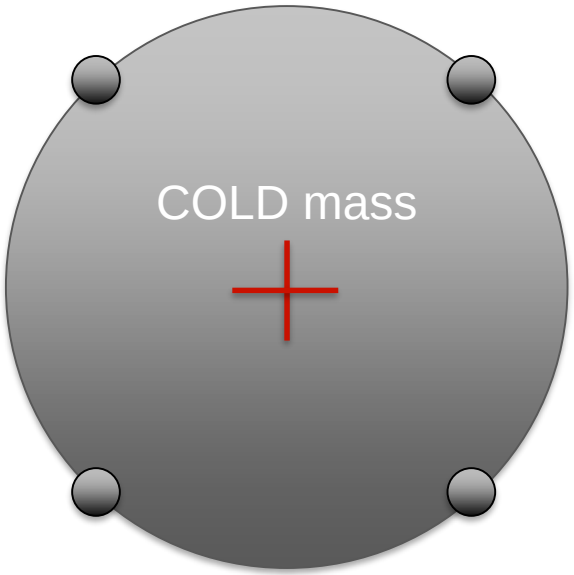

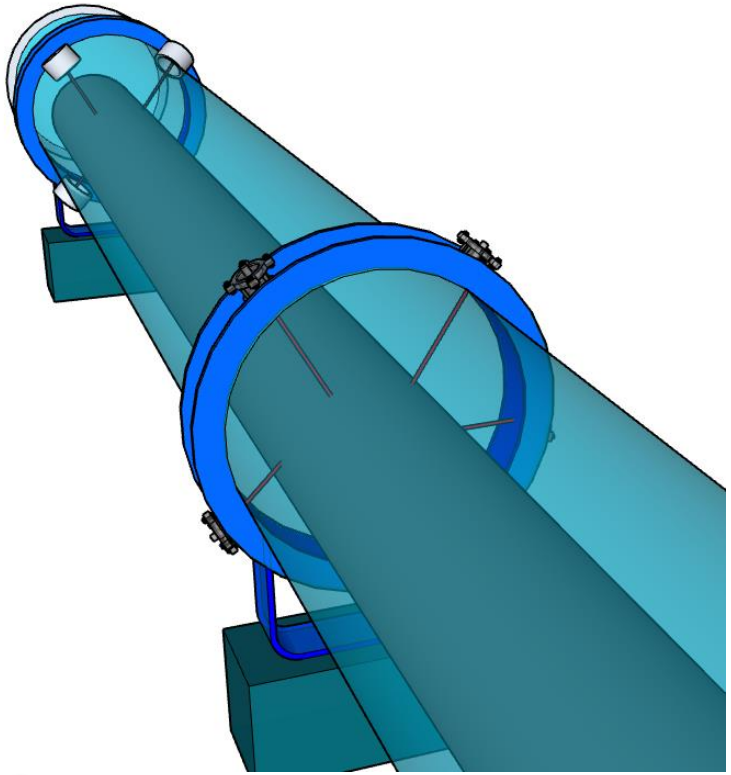

Phase 4 : Results (Warm condition)

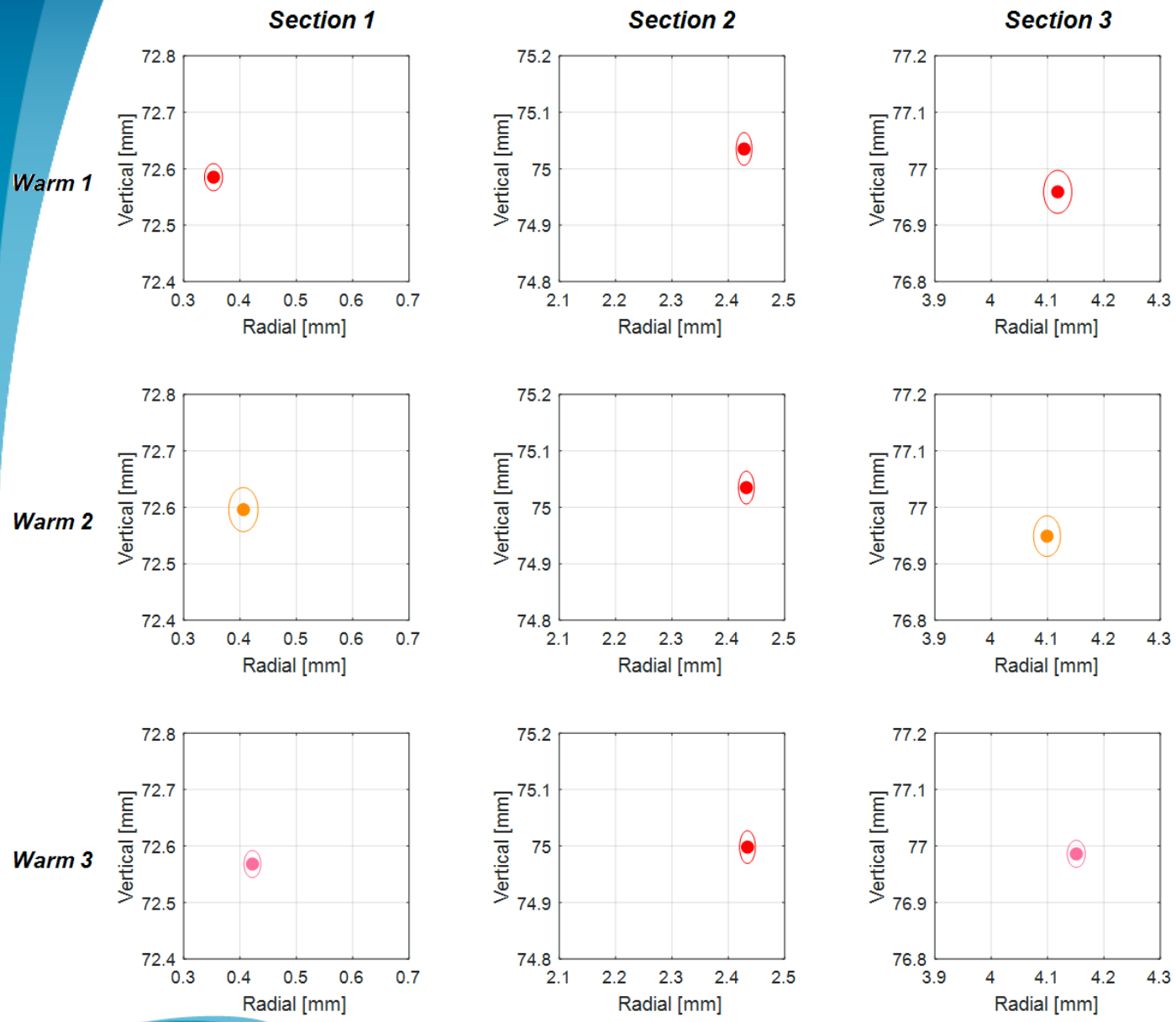

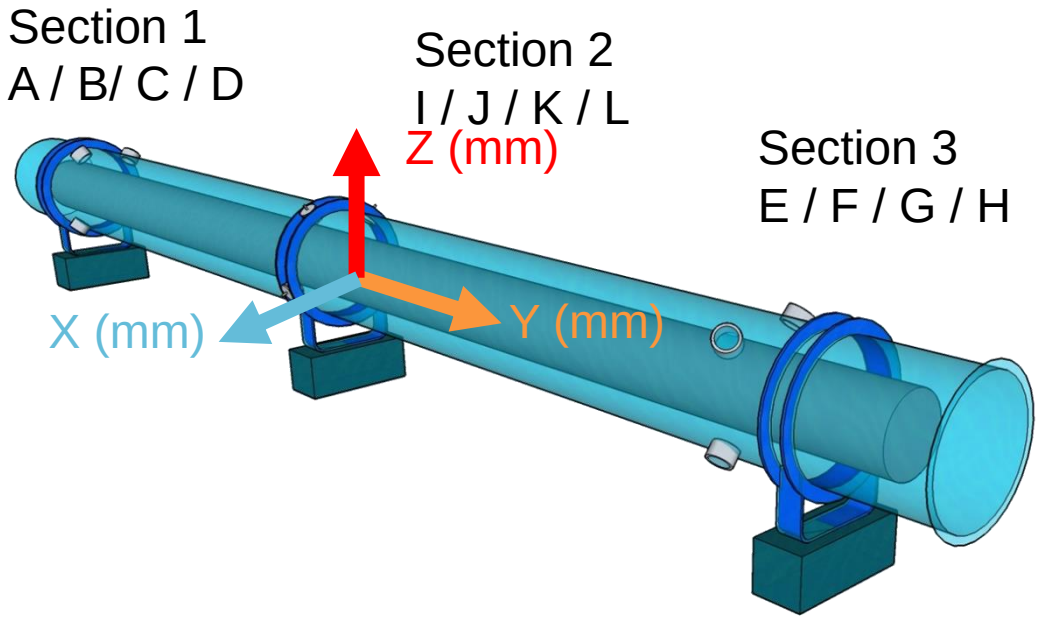

Etalon (convergent beam) + Window + Newport reflector

Multi-targets (divergent beam) + Window + Newport reflector

Multi-targets (divergent beam) + Window + Glass sphere High

Multi-targets (divergent beam) + Window + Glass sphere Low

Etalon (convergent beam)+ Window + Glass sphere with coating

Multi-targets (divergent beam)+ Window + Glass sphere with coating

Multi-targets (divergent beam)+ Feedthrought + Glass sphere with coatin

Phase 4 : Results (Warm condition)

Etalon (convergent beam) + Window + Newport reflector

Multi-targets (divergent beam) + Window + Newport reflector

Multi-targets (divergent beam) + Window + Glass sphere High

Multi-targets (divergent beam) + Window + Glass sphere Low

Etalon (convergent beam)+ Window + Glass sphere with coating

Multi-targets (divergent beam)+ Window + Glass sphere with coating

Multi-targets (divergent beam)+ Feedthrought + Glass sphere with coatin

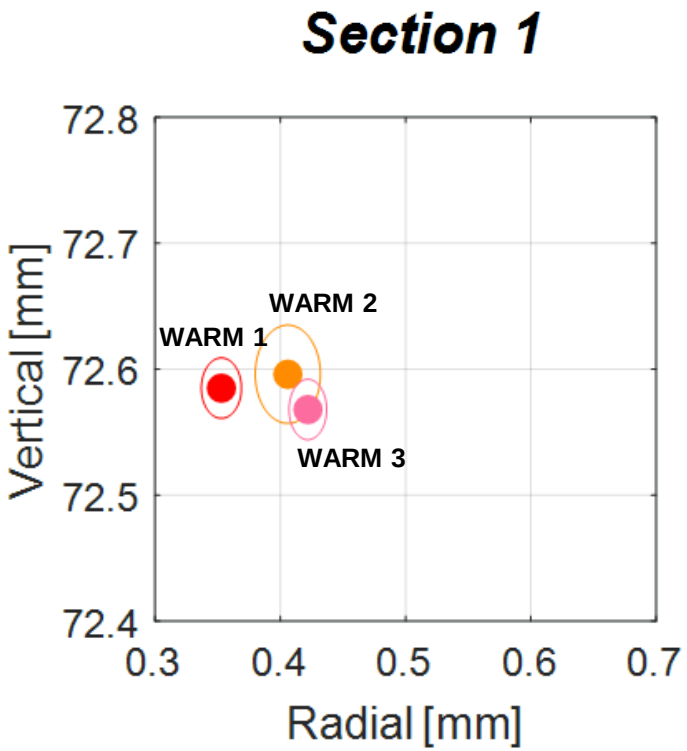

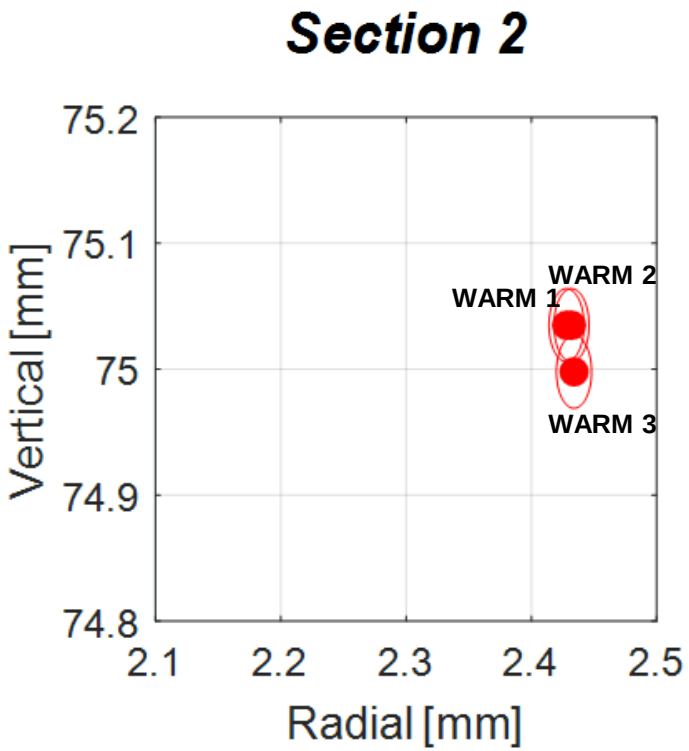

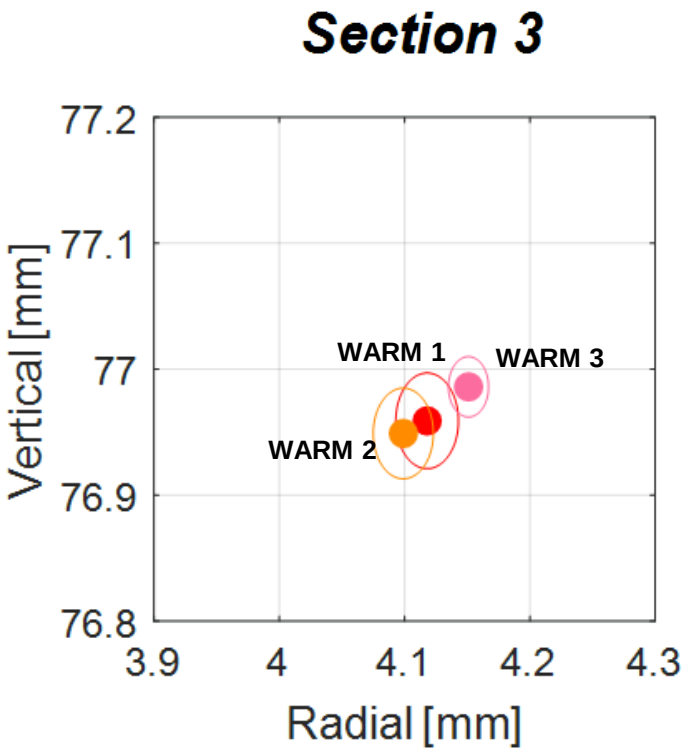

Phase 4 : Results (Cold condition)

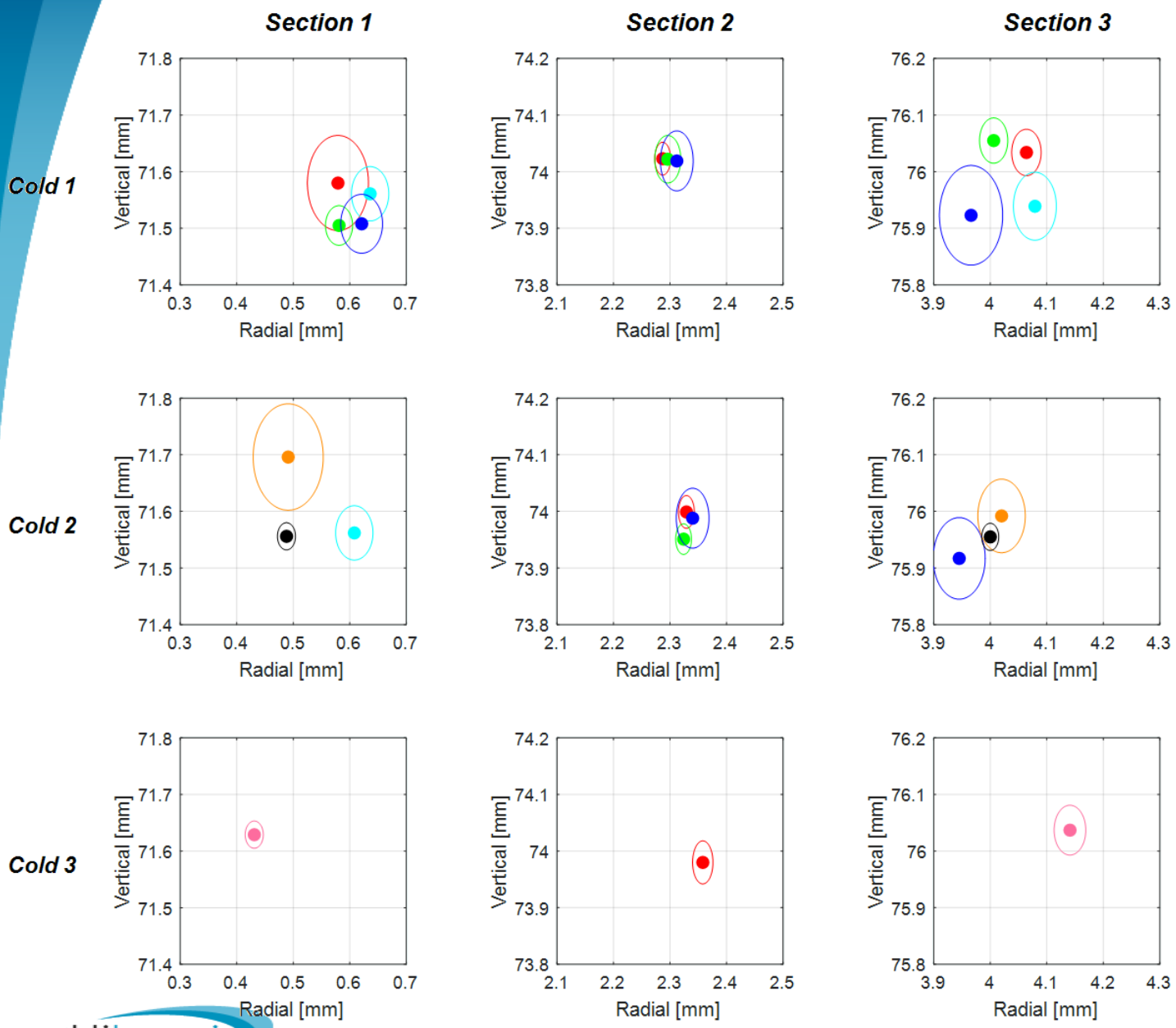

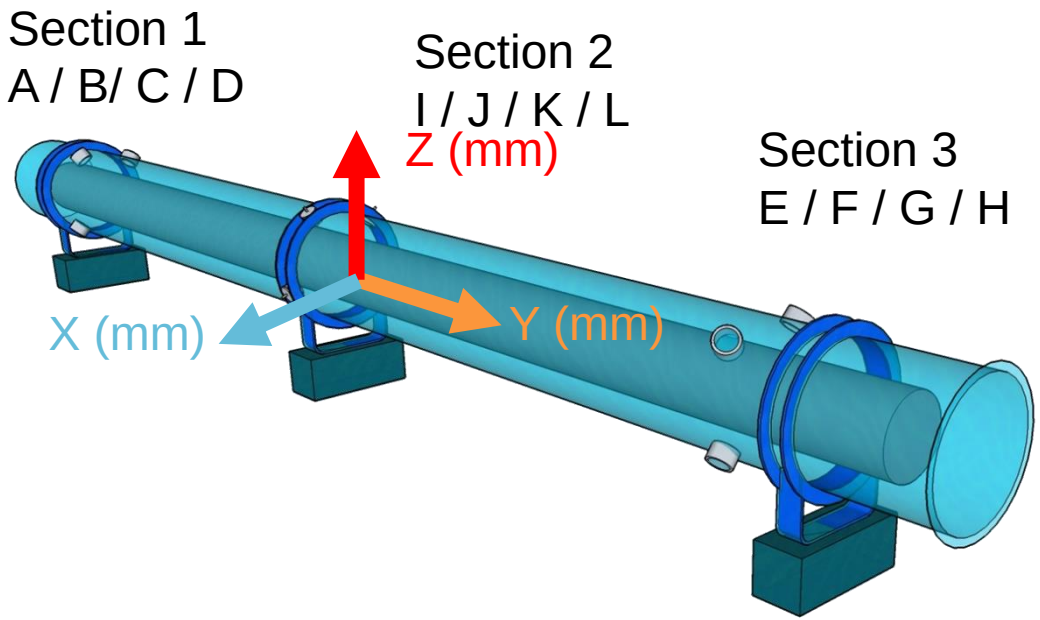

Etalon (convergent beam) + Window + Newport reflector

Multi-targets (divergent beam) + Window + Newport reflector

Multi-targets (divergent beam) + Window + Glass sphere High

Multi-targets (divergent beam) + Window + Glass sphere Low

Etalon (convergent beam)+ Window + Glass sphere with coating

Multi-targets (divergent beam)+ Window + Glass sphere with coating

Multi-targets (divergent beam)+ Feedthrought + Glass sphere with coatin

Phase 4 : Results (Cold condition)

Etalon (convergent beam) + Window + Newport reflector

Multi-targets (divergent beam) + Window + Newport reflector

Multi-targets (divergent beam) + Window + Glass sphere High

Multi-targets (divergent beam) + Window + Glass sphere Low

Etalon (convergent beam)+ Window + Glass sphere with coating

Multi-targets (divergent beam)+ Window + Glass sphere with coating

Multi-targets (divergent beam)+ Feedthrought + Glass sphere with coatin