Effects of Protection Equipment on the Beam
&
Reliability Studies for the circuit protection Systems

A. Apollonio, T. Cartier-Michaud and D. Wollmann for WP7

With inputs from: M. Blumenschein, D. Carrillo, R. Denz, B. Lindstrom, E. Ravaioli, F. Rodriguez Mateos, M. Mentink, A. Siemko, D. Sollich, J. Uythoven, M. Valette, A. Verweij, C. Wiesner, M. Zerlauth

International Review of HL-LHC Magnet Circuits 9.-10.09.2019, CERN

Outline

- Effects of Protection Equipment on the Beam and Mitigations
  - Introduction
  - Effects of quench heater discharges on beam
  - Impact of fast current changes in the triplet
  - Summary
- Reliability Analysis for Circuit protection Systems
  - Reliability requirements and reliability analysis steps
  - Failure scenarios & Effects of periodic inspections/maintenance
  - Monte Carlo models for 11 T and IT protection
  - Component level reliability analysis for protection systems (QDS, CLIQ, HDS, …)
  - Summary

Effects of Protection Equipment on the Beam and Mitigations

Effect of magnet protection equipment on beam

- Quench heaters (QH) impact the **circulating beam**, if not dumped before triggering → observed and verified for LHC main dipoles
- Change of the current (quench, CLIQ discharge, …) in triplet magnets causes **dipole kick** on circulating beam, due to offset in one plane (crossing angle) → observed during quench of RQX.R1, 03.06.2018.
- Stronger effect in HL-LHC than in LHC due to:
  - **more QH** (11 T, triplet, D1, D2), QH + CLIQ (triplet)
  - larger **beta functions** → Triplet (~8 km → ~21 km), D1 (~5 km → ~19 km) D2 (~1.7 → ~6.4 km)

Quench heater discharge: Ultrafast current rise

- **Ultra fast** effect, quench heaters reaching full current/field within less than 1/2 LHC turn

  MB: ~ 29 us; MQXF: ~ 35 us

- **Spurious triggering** of one QH unit cannot be fully excluded.

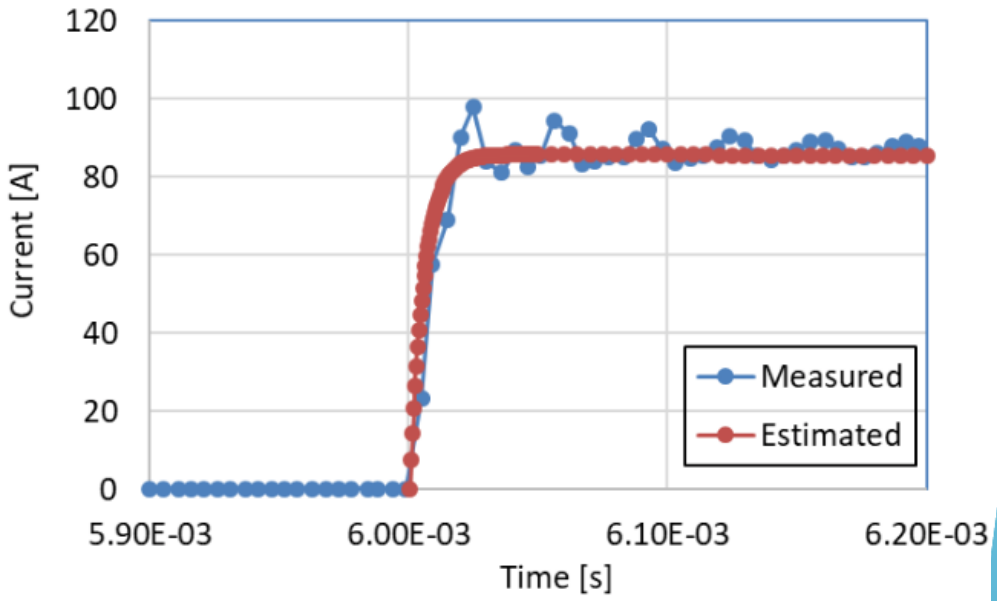

Experience from LHC dipoles (dedicated experiment)

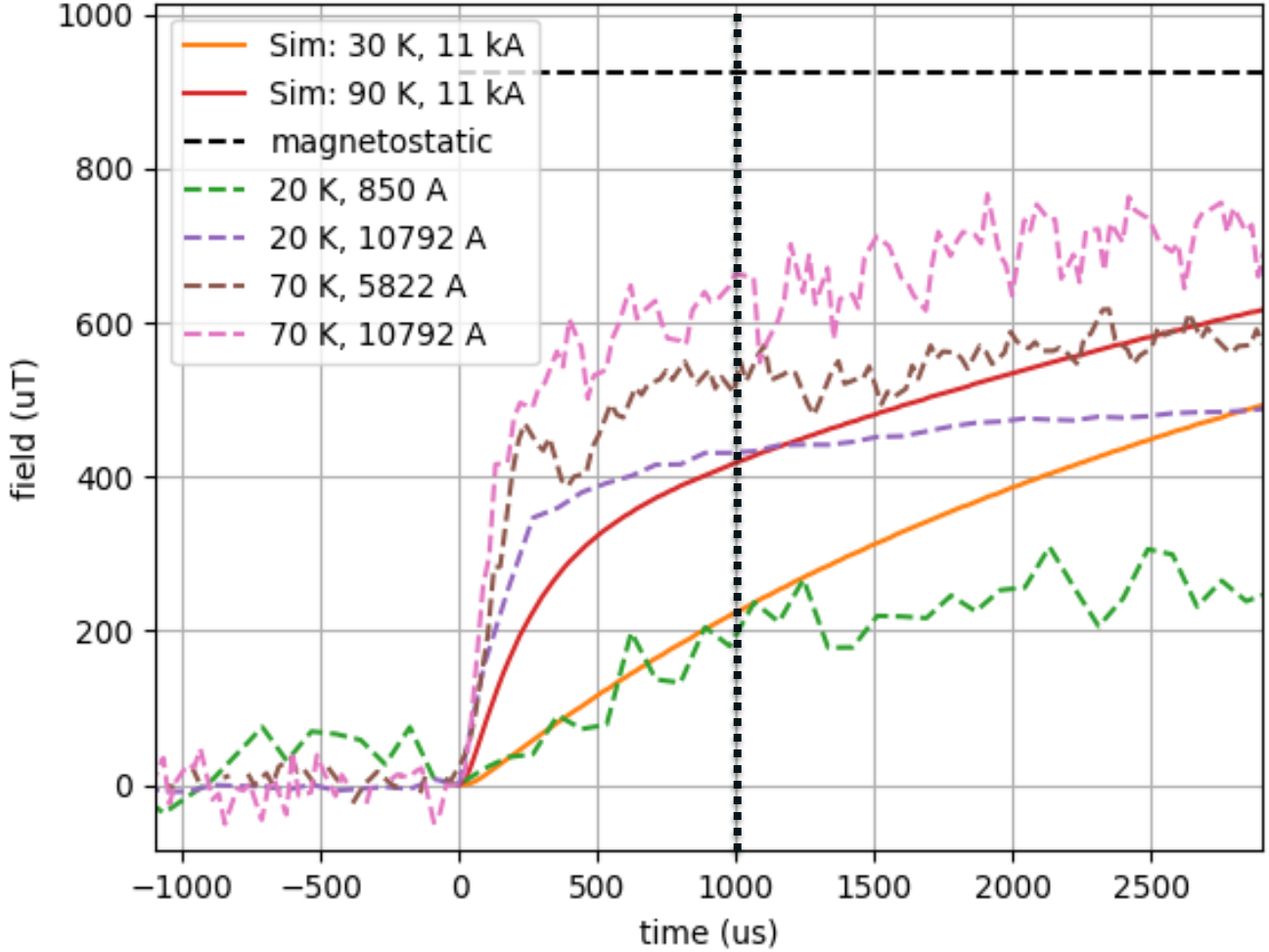

- Fast rise of field from quench heaters reaching up **to 70 % of magneto static** value after 1 ms
- Measurements show **two time constants**
- Rise time depends on beam screen **temperature** and main circuit **current**
- **Qualitative** good agreement with expectation
- Quantitative **discrepancy** between simulations and measurements
- **Detailed studies** of shielding effects required (experiments & simulations)

Expected kicks from HiLumi magnets with all QH fired

Magnet (all QH)	LHC kick (sigma)	→	HL-LHC kick (sigma)
MB	0.3	→	0.5
D1	1.4	→	2.0 → < 0.5
D2	1.2	→	2.4 → < 0.5
11 T - dipole	0.04	→	0.4 → 0.03
Triplet (48 QH)	2.5	→	33.7
Triplet (single QH)	0.6	→	1.3

Comparison of kicks from quench heater discharges (magnetostatic values)

- Impacts of quench heaters on beam has been **reduced**/mitigated for HL-LHC magnets by change of **connection schemes** (dipole → quadrupole fields)
  - Applied for 11 T, D1 and D2
- HL triplet quench heater connection scheme has been optimised to reduce the effect of a spurious **discharge of a single** quench heater power supply. The effect of all 48 quench heaters on the beam remains critical
- Quench detection systems will ensure that a **beam dump is initiated before the discharge** of quench heaters and CLIQ is triggered

Effect of quench in LHC triplet on beam

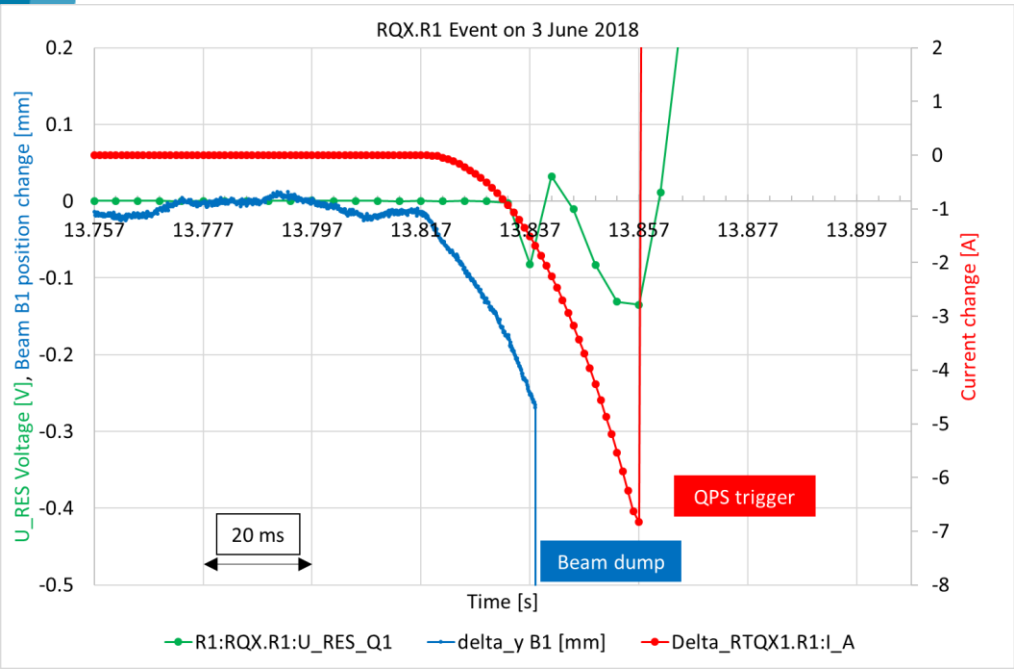

Event overview:

- Symmetric quench of RQX.R1 due to cryo-control problem
- Orbit offset of ~250 um with dI = 1.7 A (I_circuit = 6.2 kA) causing beam loss induced beam dump
- QPS triggering ~20 ms after beam dump
- Detailed analysis of event documented in internal note: B. Lindstrom, E. Ravaioli, "Analysis of the sequence of events in the RQX.R1 circuit on 3 June 2018"

- **Small changes** in triplet current can cause **important beam kicks** due to large beta functions and crossing angle (beam offset from magnetic centre)
- Quenches are **sufficiently slow** to allow dumping the beams before critical loss levels are reached
- HL triplets will have **symmetric quench protection**

Effect of one spurious CLIQ discharge in IT

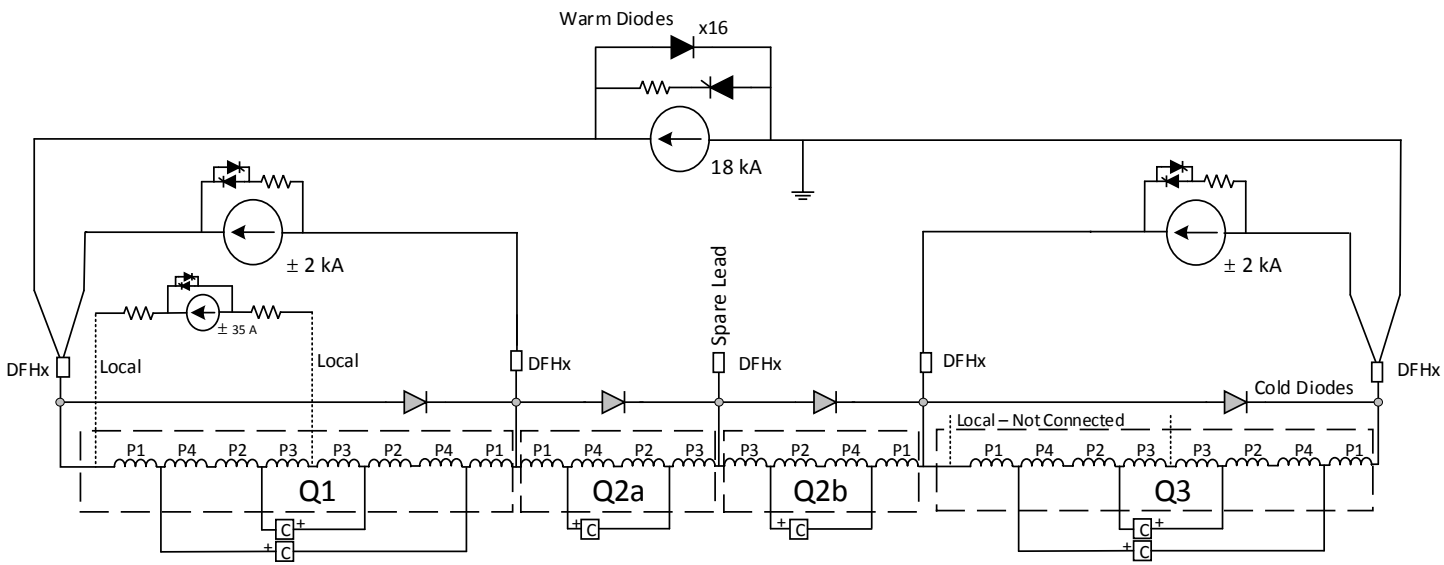

Old baseline

- A spurious discharge of a single CLIQ unit cannot fully be excluded

Spurious CLIQ discharge in Q1/Q3

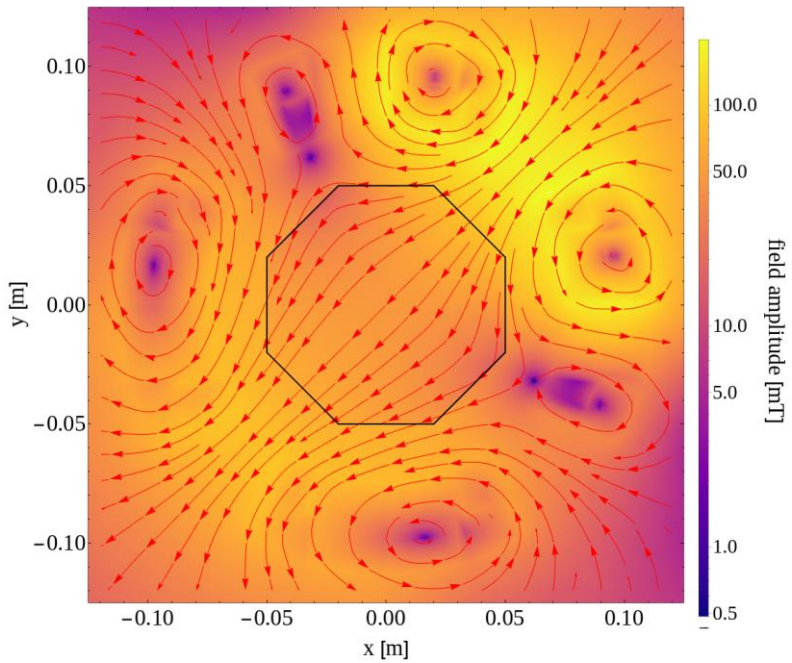

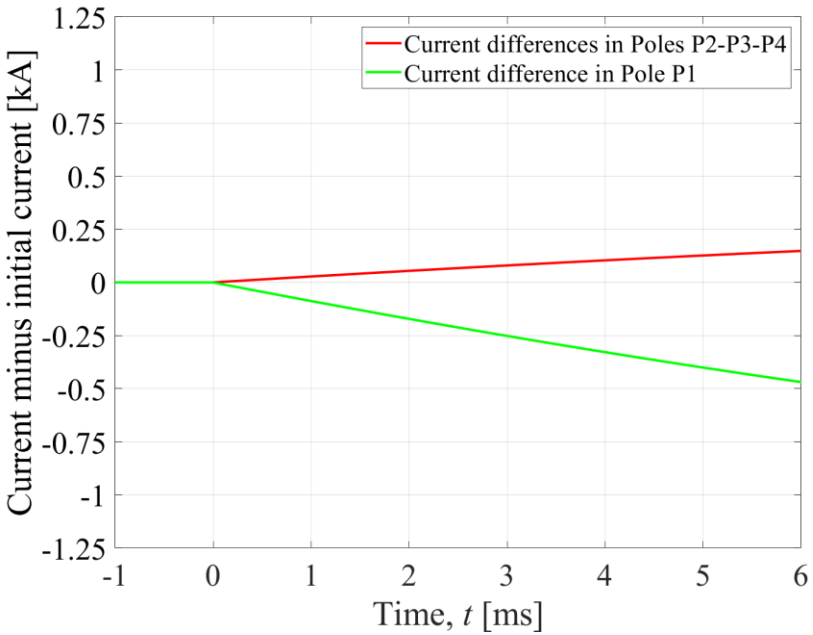

- **Asymmetric** discharge into the poles of the Q1a/b (respectively Q3a/b)
- **Skew dipole** field in magnet causing **kick of beam**
- Additional (much weaker) dipole component during discharge of magnet current due to beam offset (Q1: up to 9.8 mm, Q3: up to -17.1 mm)

Spurious CLIQ discharge in Q2

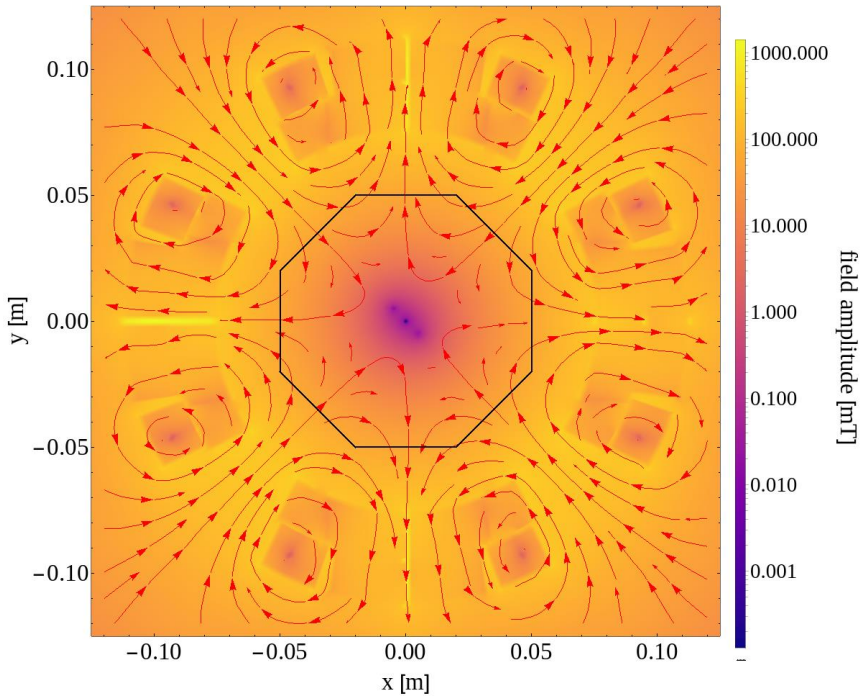

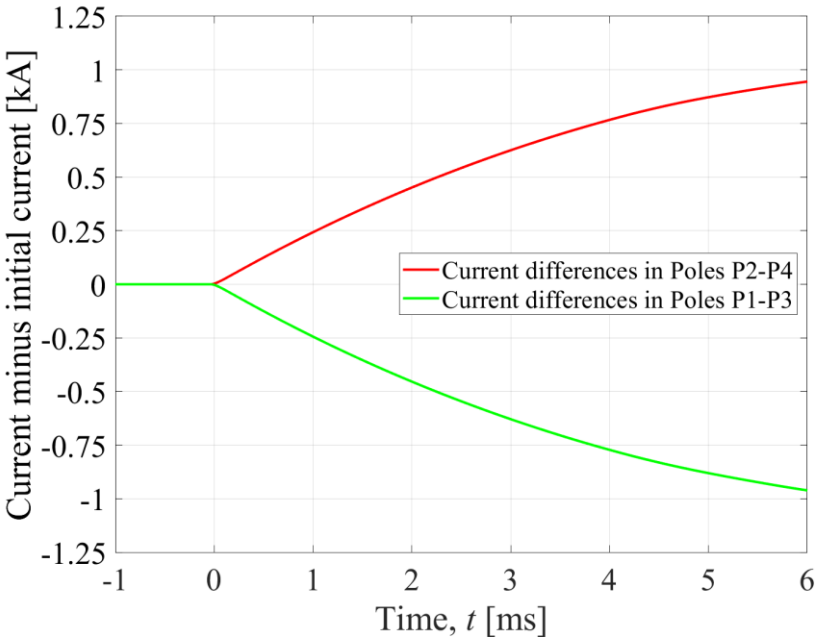

- **Symmetric discharge** into P1-P3 and P2-P4 of Q2a/b
- **Octupolar** field
- Dipole component developing during discharge of magnet current due to beam offset (up to 16.6 mm) in Q2

Effect on the circulating beam

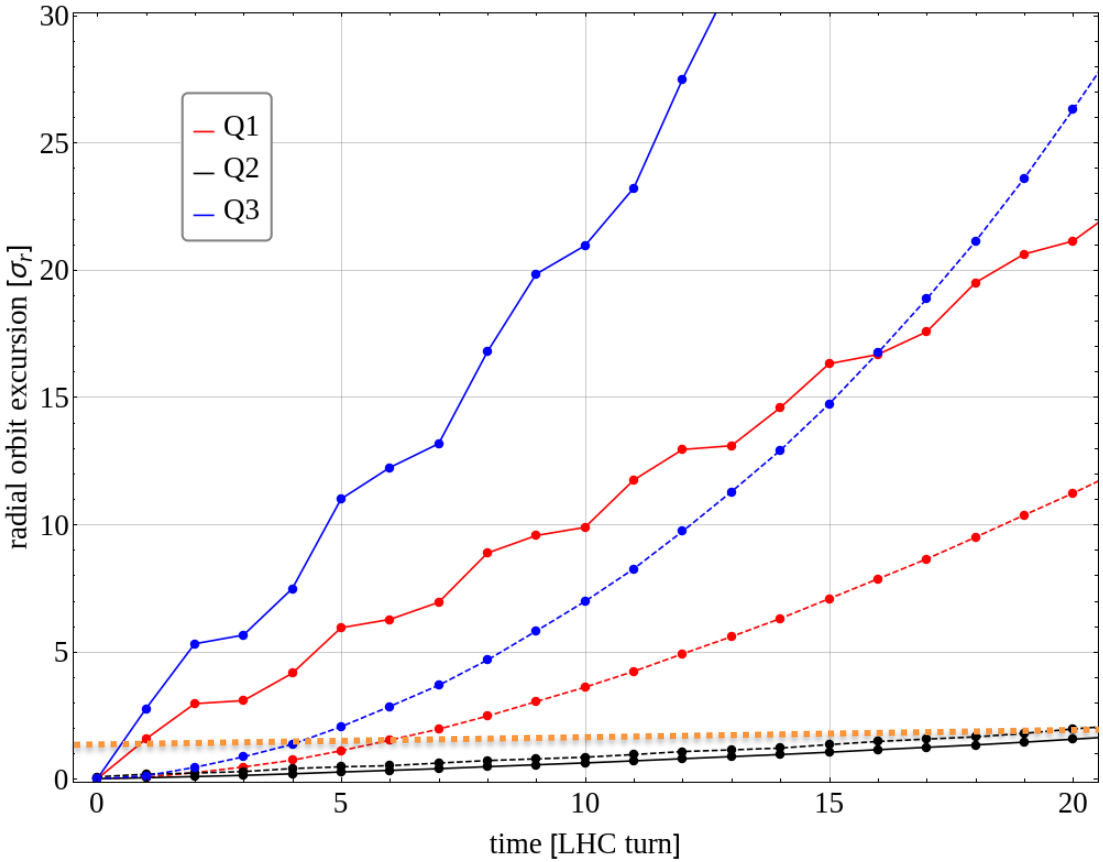

- Solid lines: without beam screen
- Dashed lines: with beam screen (model not validated)

Critical orbit excursion ~1.5 sigma

- Spurious discharge of one CLIQ unit into **Q1 or Q3** causes **critical orbit excursion** within one LHC turn (89 us) → **no possibility to actively interlock**
- CLIQ discharge into **Q2** reaches critical levels after only ~ 20 turns → **sufficient time** to actively interlock and dump the beams before critical loss levels will be reached

Mitigation of effect of spurious CLIQ firing on circulating beam

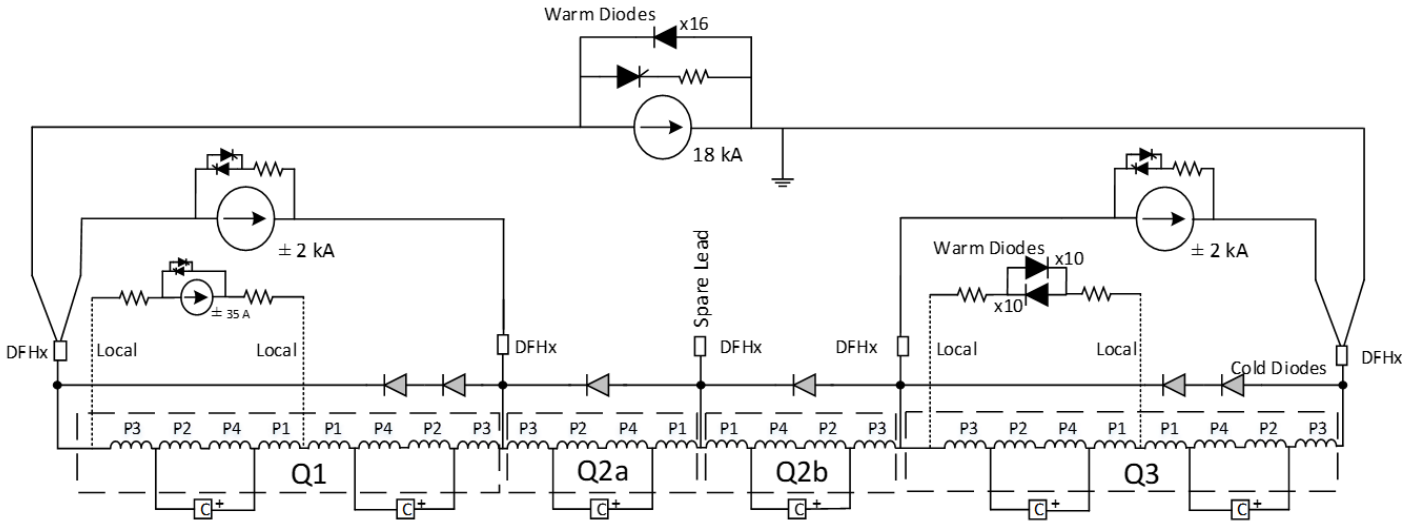

Current baseline

- Implementation of a **Q2 like CLIQ connection scheme** for Q1 and Q3 in current IT baseline
- CLIQ discharge creates **octupole fields** in Q1, Q2 and Q3
- CLIQ discharge in Q1 and Q3 **less critical** than in Q2
- Spurious discharge of CLIQ units will be **interlocked** → beam dump ensured **within < 1ms** after start of discharge

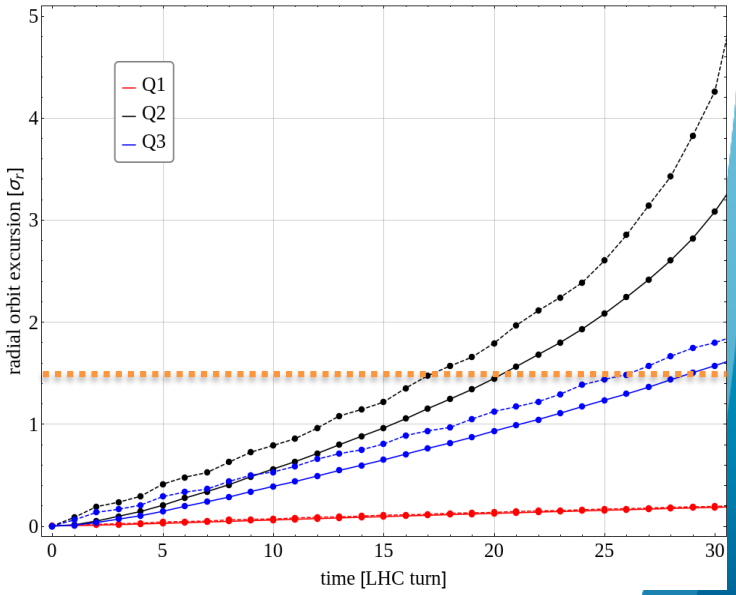

Step	Duration
Detection QH discharge (di/dt ≈ 4 MA/s)	100 µs
Detection CLIQ discharge (di/dt ≈ 200 kA/s)	< 500 µs
Communication DQHSU → PIC → BIS	12 µs
Beam abort sequence	270 µs
Total	< 1 ms

Summary – Effects of protection equipment on beam

- Fast orbit offsets have been **observed in the LHC** due to firing of quench heaters
- Quench heater connection schemes have been changed to **quadrupole schemes** where possible → reduction of kick strength
- Spurious CLIQ discharges in Q1 or Q3 would have caused **fastest failure** in the LHC → mitigated by change of CLIQ connection scheme
- In case of a **quench** in the HL triplets, the interlock sequence will ensure that a **beam dump request is sent before a discharge** of quench heater power supplies and CLIQ units is initiated
- **Spurious CLIQ discharges** will be interlocked and **initiate immediately a beam dump** and re-trigger the remaining CLIQ units

Reliability Analysis for Circuit protection Systems

Ongoing Availability/Reliability Activities in WP7

1. Top-down → Definition of reliability/availability targets for protection systems

- Use LHC risk matrix to define acceptable frequency of failure scenarios

2. Intermediate → Breakdown of failure frequency into sub-system reliability/availability targets

- Define acceptable reliability parameter space for protection sub-systems (failure rates, periodic inspection/test intervals, etc.)

3. Bottom-up → Demonstration that system designs are compliant to reliability targets

- Component-level calculations
- (Possible) refinement of architecture or component selection + iteration

Definition of Reliability Requirements

LHC risk matrix		Recovery						
		∞	year	month	week	day	hours	minutes
		S7	S6	S5	S4	S3	S2	S1
Frequency	1 / hour							
	1 / day							
	1 / week							
	1 / month							
	1 / year							
	1 / 10 years							
	1 / 100 years							
	1 / 1000 years							

Example: 10 % probability of damaging the triplet in 100 years

Failure Mode and Effects Analysis: identification of **failure consequences** → establish acceptable **frequency** for failure mode occurrence

Failure Scenarios – Description

Protection studies carried out in collaboration with MPS experts and system designers

Failure Logic can be expressed in the form of **fault trees**

Each node has **assigned probabilities** of failure

Calculation of probability of top event **based on node probabilities**

Static fault trees do not account for relevant aspects of protection systems → **active monitoring** of component status, **periodic inspection/tests**, event sequencing

Developed **Monte Carlo model** to calculate probability of **failure to protect** the triplet

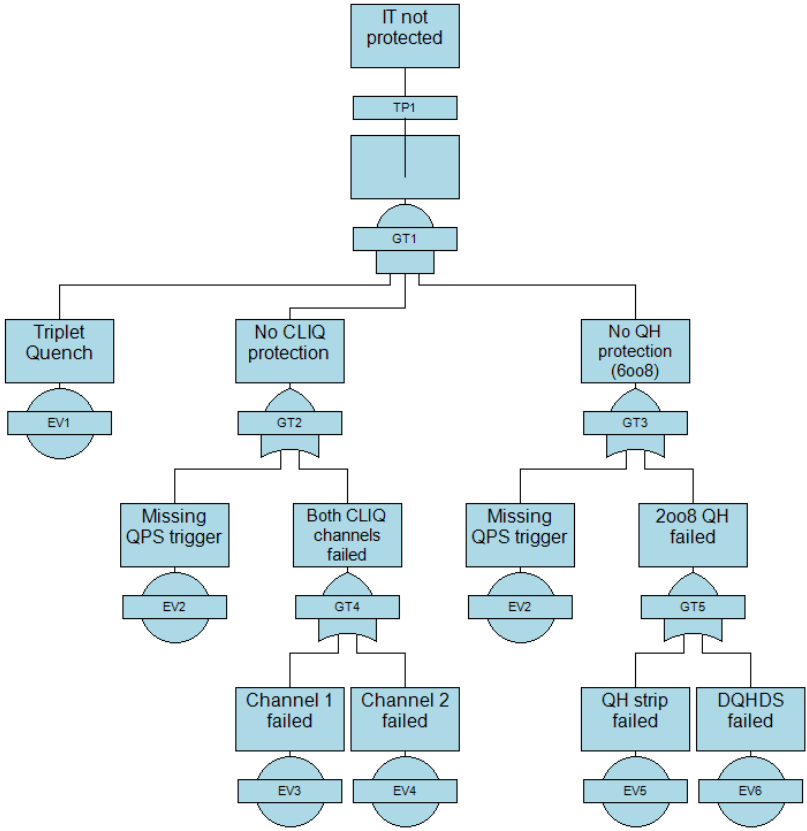

Effect of Periodic Inspection/Maintenance

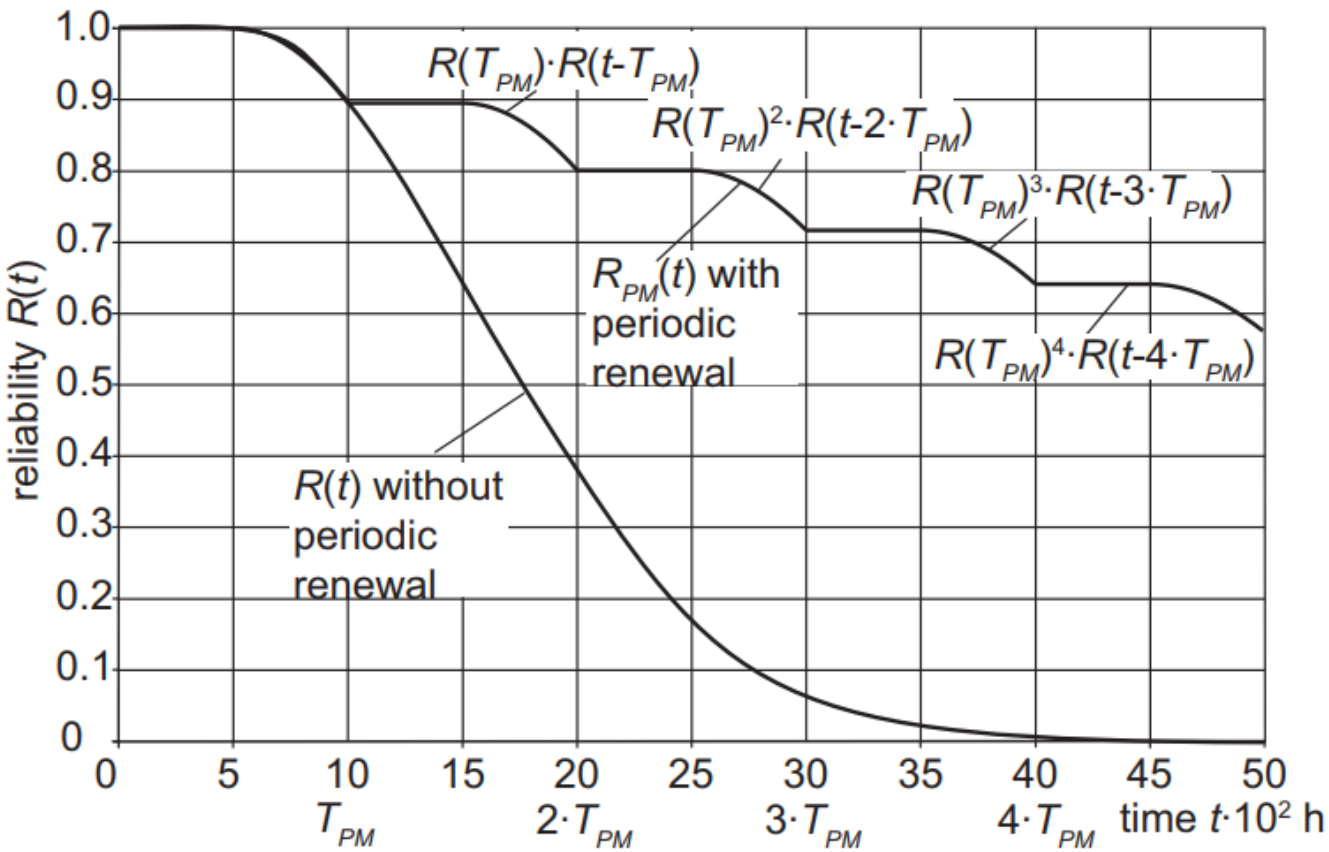

Periodic inspection/tests of protection equipment can significantly improve reliability

Also **quench events 'count'** as tests, as missing redundancy will be detected during a discharge

What is the **minimum acceptable interval** between periodic tests to respect protection requirements?

Example 1: 11T Magnet Protection

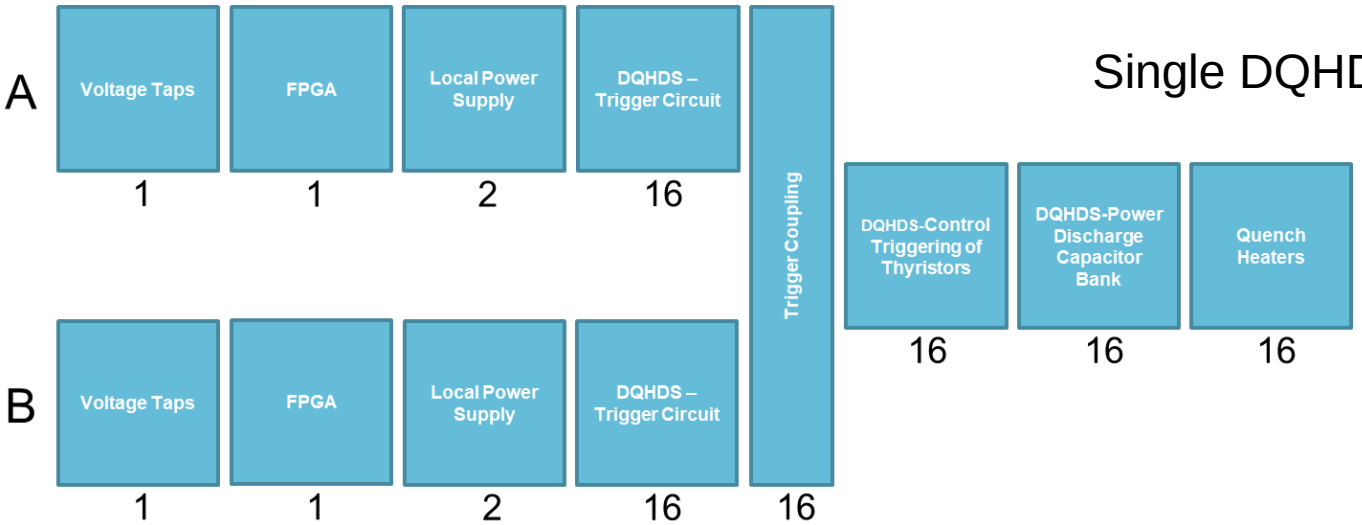

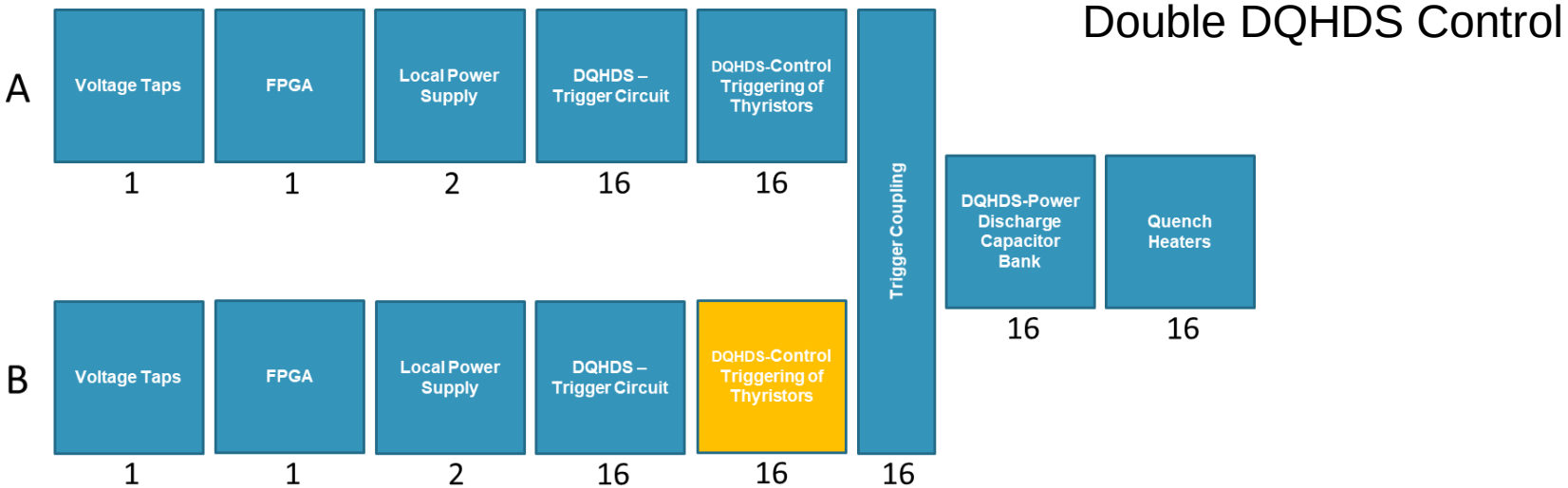

Example 1: 11T Magnet Protection

Top event: unprotected magnet + quench

unprotected magnet
≥ 3 oo 16 DQHDS
do not discharge

(A)symmetric quench

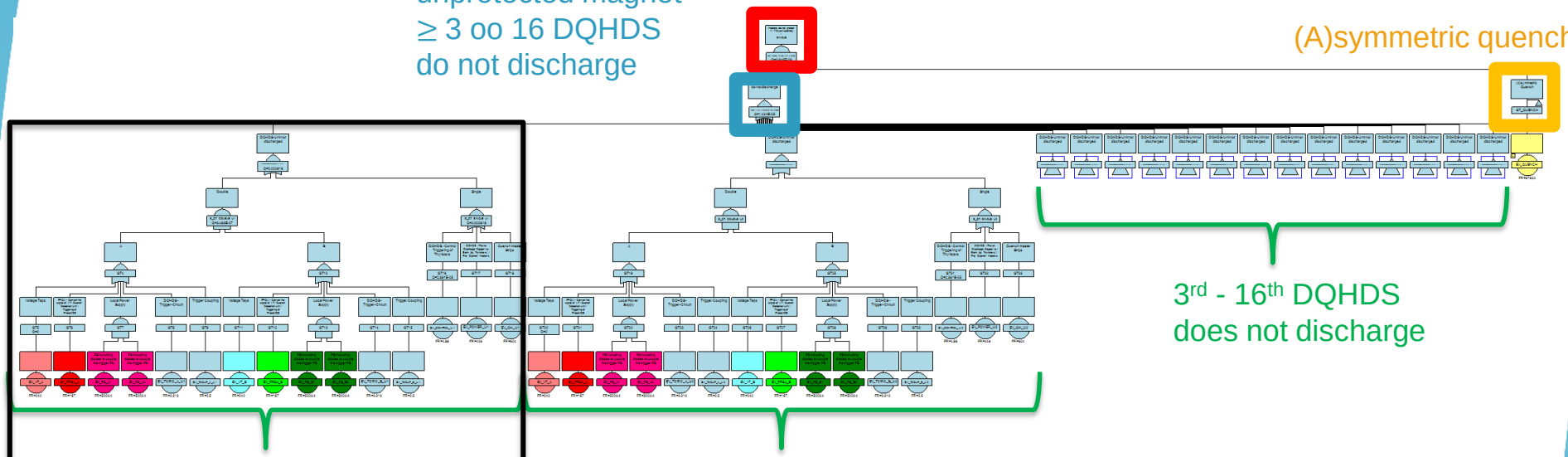

3rd - 16th DQHDS
does not discharge

1st DQHDS
does not
discharge

2nd DQHDS
does not
discharge

Reliability study demonstrated the limited gain in terms of protection of having a redundant DQHDS control unit and showed the importance of regular testing

Example 2: IT Magnet Protection

CLIQ Architecture (x24)

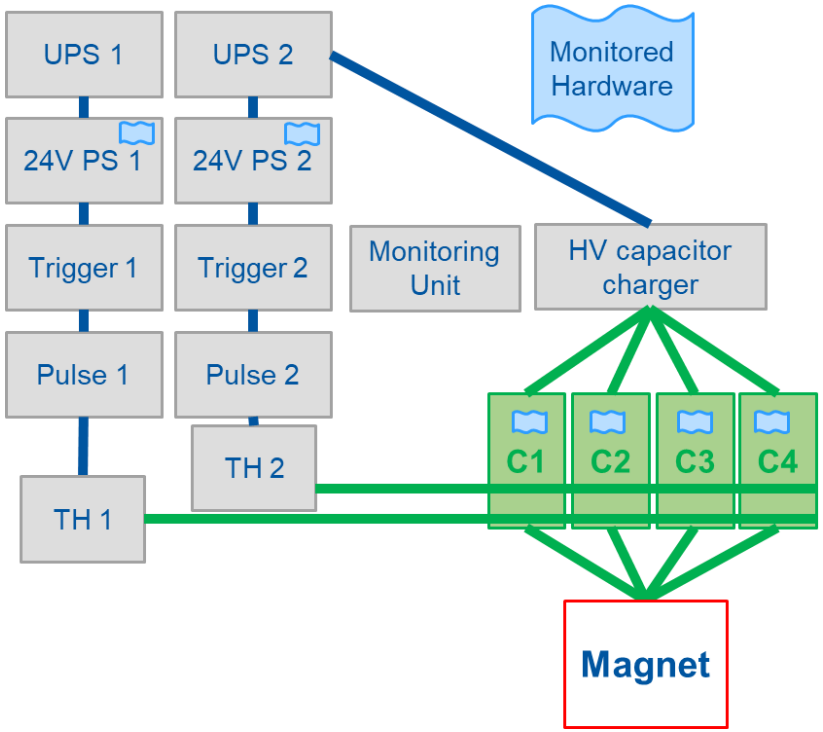

QH Architecture (x192)

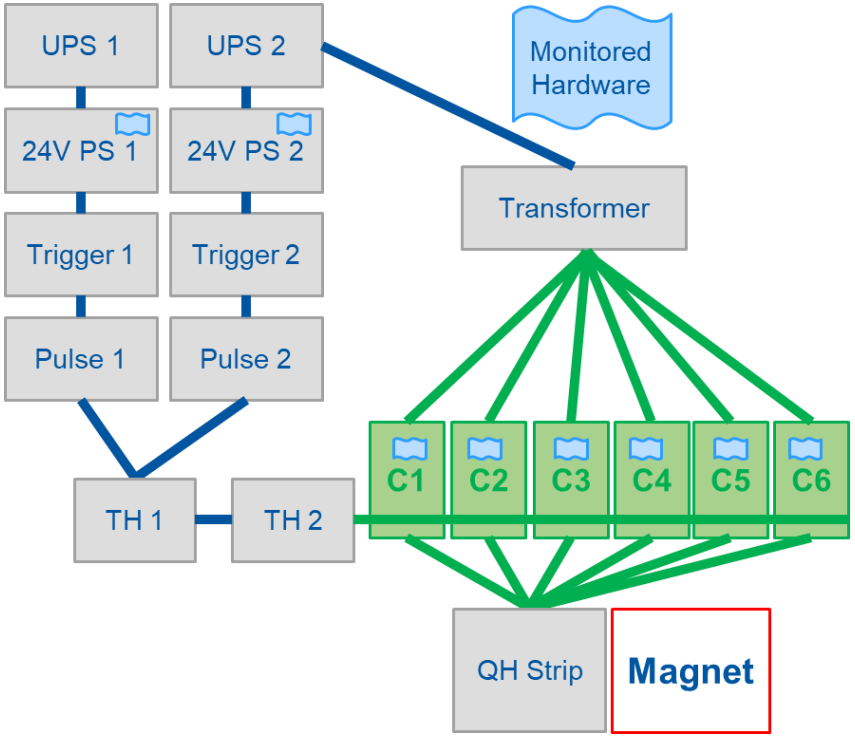

Protection target: 10% probability of damaging a triplet magnet in 100 years (2 % in 20 years)

Preliminary studies demonstrate that the **required protection level can be achieved with the baseline configuration (CLIQ + QH)**. Results assume QH reliability close to LHC values, to be demonstrated for Nb3Sn magnets.

Conclusions - Reliability Analysis for Circuit protection Systems

- Definition of reliability targets for circuit protection systems based on detailed **failure mode analysis**, involving many magnet & equipment experts
- **Methodology and tools developed** and used in ongoing and future studies (LHC risk matrix, Reliability allocation based on complexity, AvailSim)
- Important results for designs of protection systems
  - **Confirmation** of final configuration of **11T protection architecture**
  - Study of IT magnet protection → preliminary results show that baseline configuration (CLIQ + QH) will **meet the protection targets**
  - Future studies to define **sub-system reliability** requirements for IT
  - **Component level analysis** for CLIQ and quench heater power supplies ongoing

Questions?

Spare slides

Mitigation of effect of spurious CLIQ firing on circulating beam

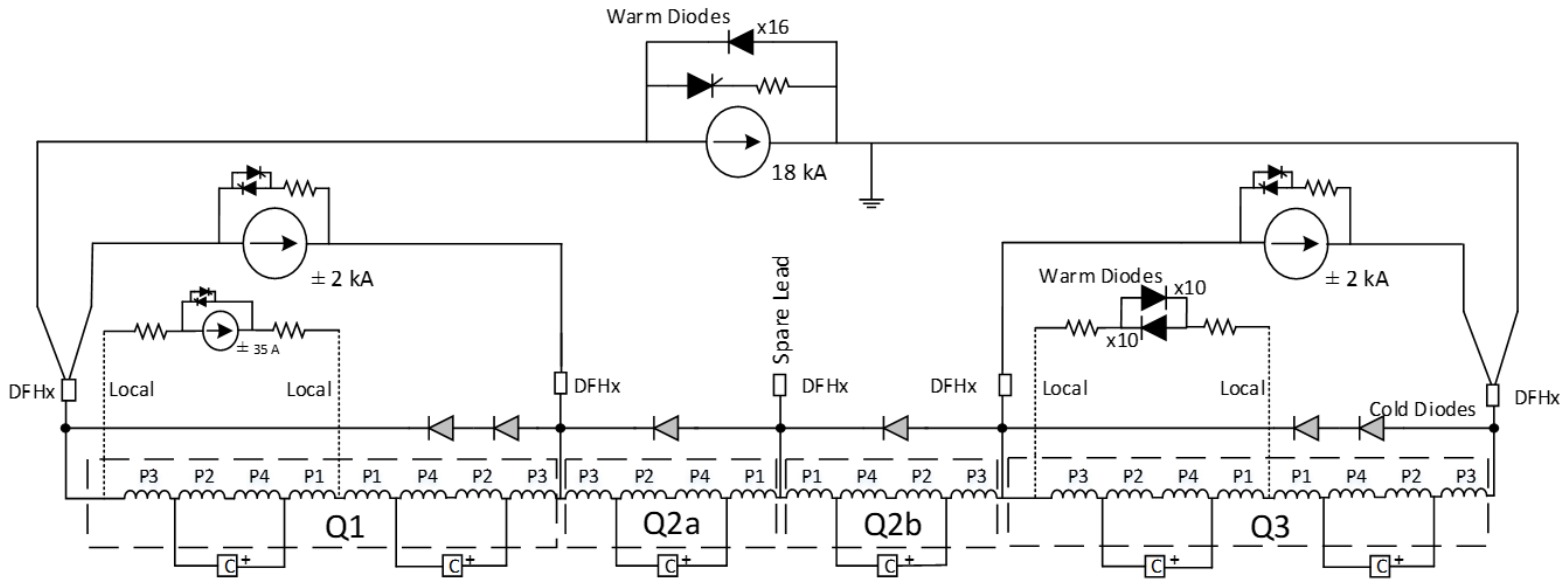

Current baseline

- Implementation of a Q2 like CLIQ connection scheme for Q1 and Q3
- CLIQ discharge creates octupole field