Tile GbE Switch Connection for Off-Detector Electronics with the Phase 2 Electronics System Upgrade

Daniel Edwards,
Mpho Gift Doctor Gololo,
Bruce Mellado

School of Physics and Institute for Collider Particle Physics University of the Witwatersrand

January 31st, 2020

Overview

Large Hadron Collider

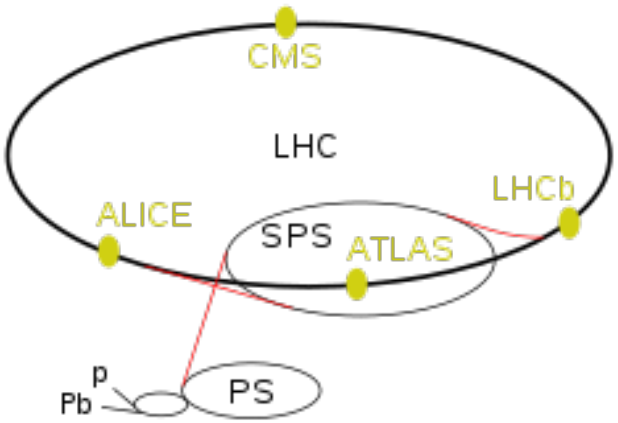

- Large Hadron Collider undergoing major upgrade
- Increase instantaneous luminosity $\Longrightarrow$ increased proton-proton interactions per second
- Increase data $\Longrightarrow$ electronics upgrade

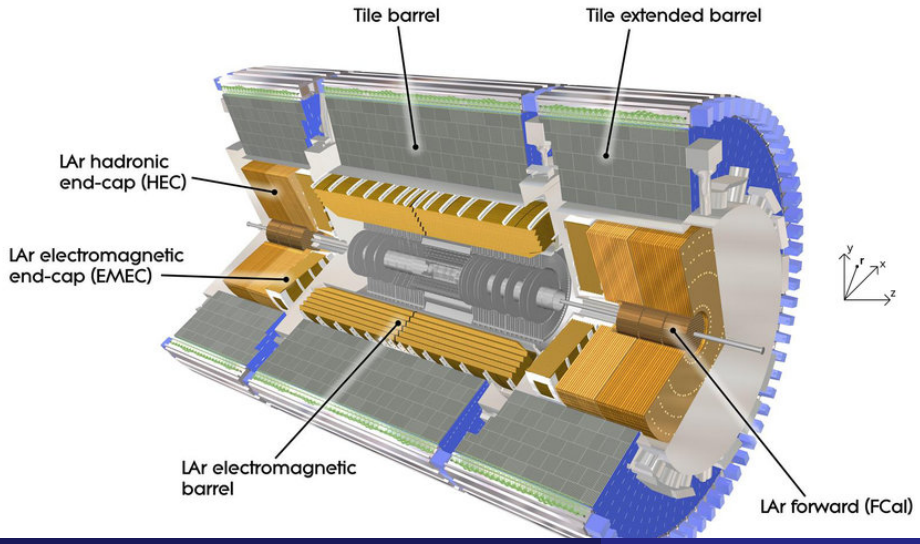

ATLAS Detector

- Inner Detector
- Electromagnetic and hadronic calorimeter
- Muon Spectrometer

ATLAS Tile Calorimeter

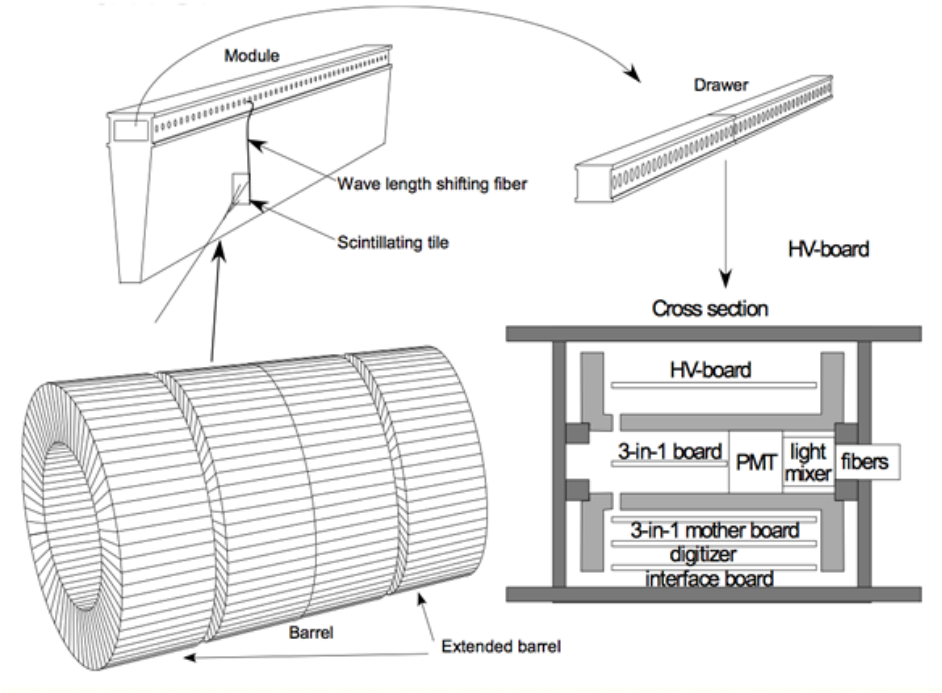

TileCal Detector

- 4 barrels $\Longrightarrow$ 2 central, 2 extended
- On-detector electronics
- Off-detector electronics

Electronics Read-out Chain

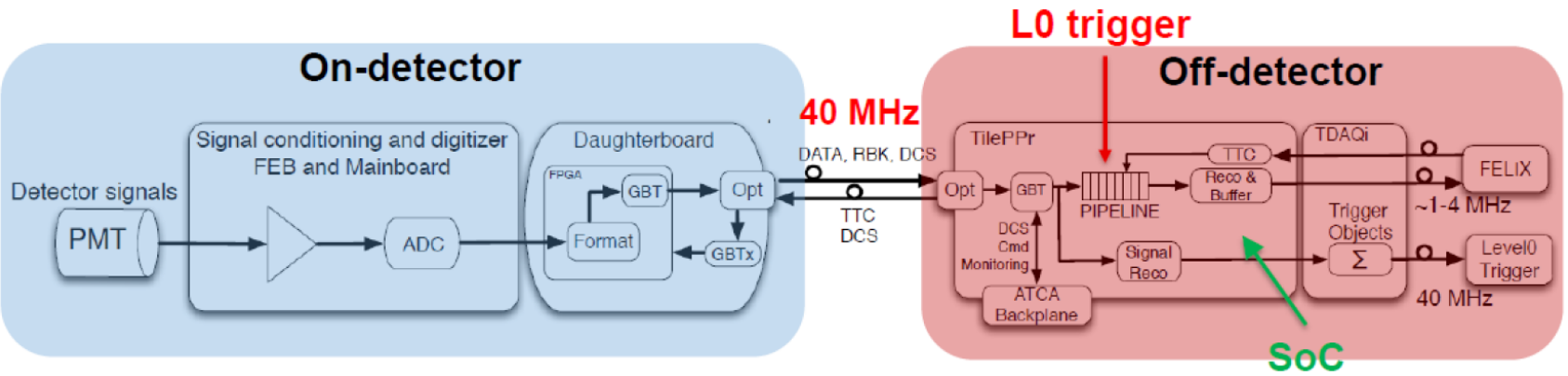

- On-detector electronics
  - Photo-Multiplier $\Longrightarrow$ scintillating tiles
  - Mainboard $\Longrightarrow$ FEB control, ADC
  - Daughterboard $\Longrightarrow$ high-speed communication
- Off-detector electronics
  - PreProcessor
  - Advance Telecommunication Architecture

Electronics Read-out Chain Upgrade

Upgrades to Tile Calorimeter

- Luminosity [1]
  - Current: $1 \times 10^{-34} cm^{-2} s^{-1}$
  - Upgrade: $7.5 \times 10^{-34} cm^{-2} s^{-1}$

Upgrades to Off-Detector Electronics

	Current	Phase 2 Upgrade
Total BW	165 Gbps	40 Tbps
Nb. Fibers	256	4096
BW/module	800 Mbps	150 Gbps
Nb. Boards	32	32
Nb. Crates	4 (VME)	4 (ATCA)
BW/board	6.4 Gbps	1.28 Tbps

Tile Switch

- Gigabit Ethernet Switch (TileGbE) mezzanine board
- 16 Ports $\implies$ TilePPr
- Connect Phase 2 upgrade with CERN

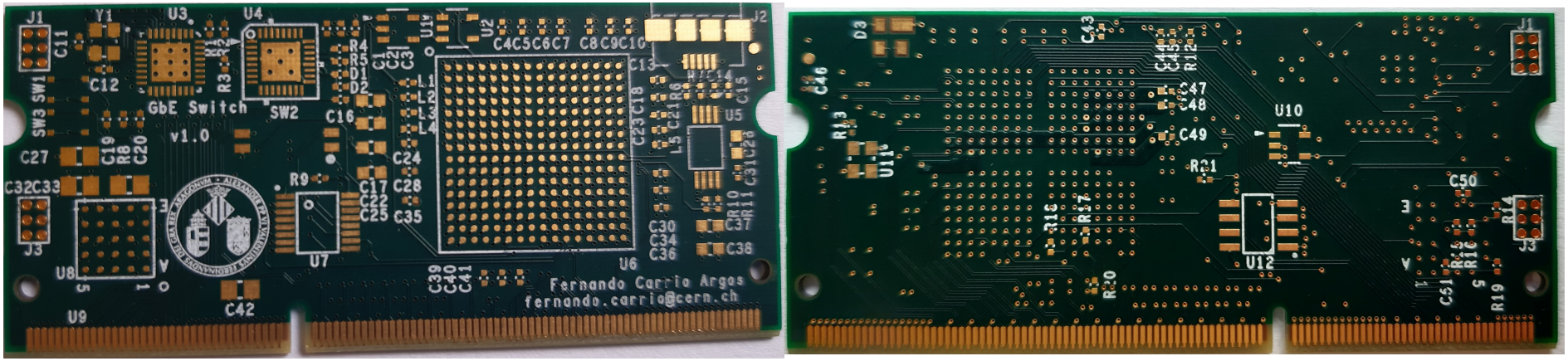

Figure: TileSwitch PCB

Tile Switch - Functionality

Tile Switch - 16 GbE Port Switch

- Network Switch
  - Connects devices on a network
  - Packet Switching
  - Connection points for hosts
- Gigabit Ethernet
  - IEEE 802.3
  - Local Area Connection $\implies$ CERN applicable
  - Gigabit speeds

Tile Switch - 16 GbE Port Switch

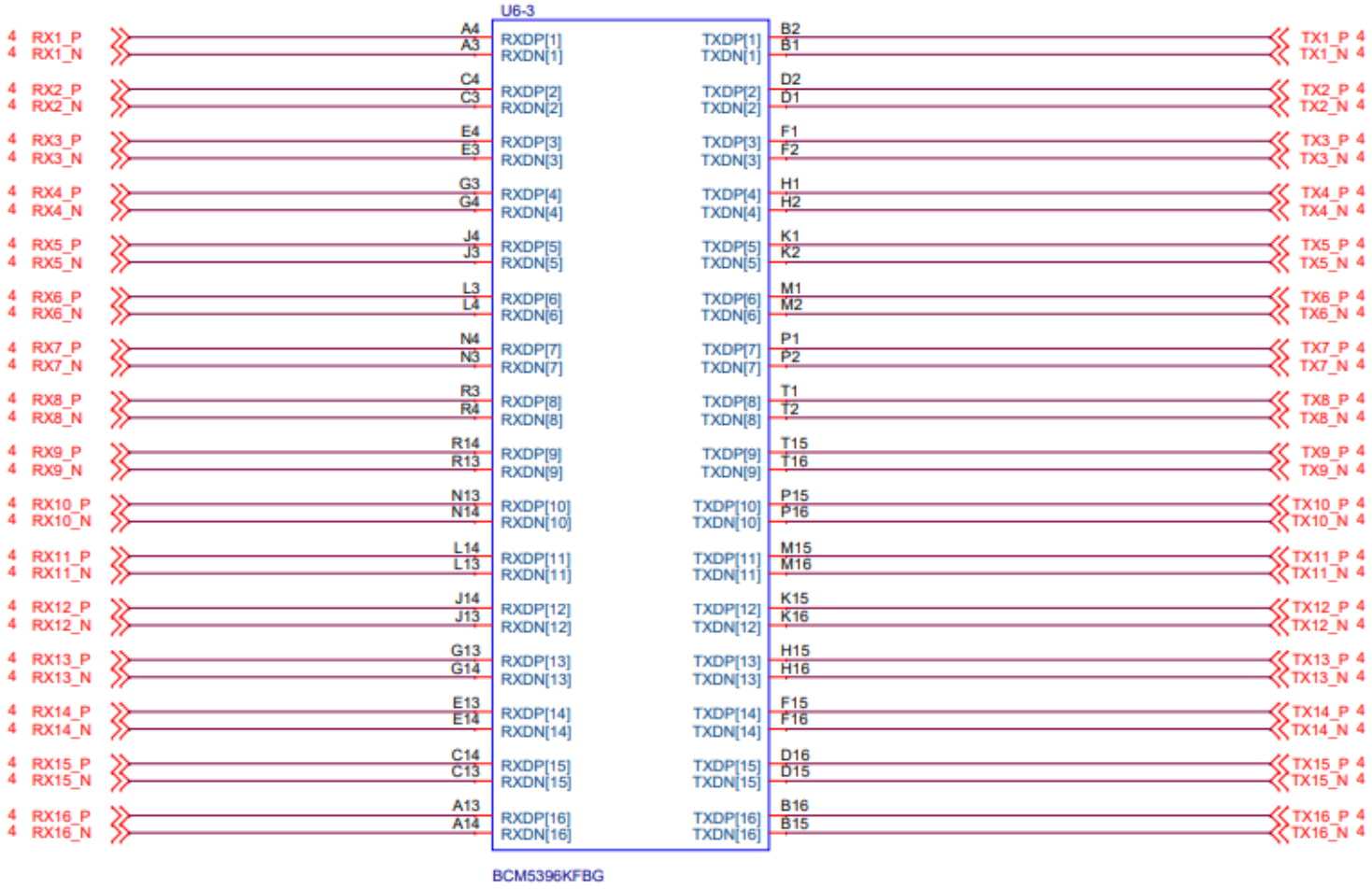

Tile Switch Integration

- Off-Detector Electronics $\longrightarrow$ CERN Network
- GBT Protocol
  - Decentralized network
  - Peer-to-peer optimized

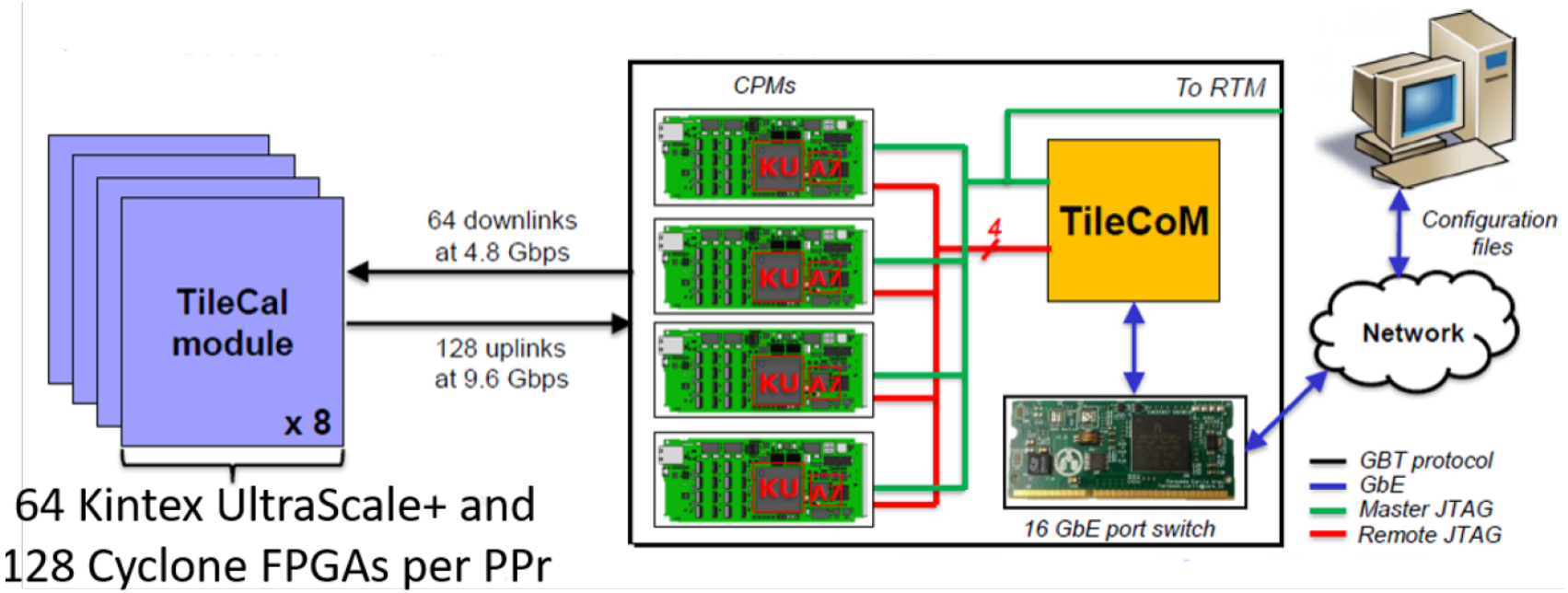

Tile Switch Testing

- Test-bench preperation with motherboard
- Ethernet communication $\implies$ 16 ports
- Power consumption and temperature measurements
- Firmware and software upgrades

Current Production Progress

- Manufactured in South Africa
- All documentation approved (iThemba labs)
- 6 PCBs in production (Trax Interconnet)
- Board population (Jemstech)
- Testing $\longrightarrow$ CERN 2020

Project Timeline

- Feb 2020 - Receive the populated TileSwitch boards
- Feb 2020 - Test-bench with motherboard
- Mar 2020 - Ethernet communication $\longrightarrow$ 16 ports
- Apr 2020 - Power consumption and Temperature measurements
- May 2020 - Firmware and software upgrades

Thank you!

Questions?

References

F Carrio and F Valero. "The PreProcessor Module for the ATLAS Tile Calorimeter at the HL-LHC". In: *ATLAS Tile Calorimeter Collaboration* (Mar. 2019).