First Saturation Correction to Single Gluon Production in High Energy pA Collisions

Ming Li
North Carolina State University, Raleigh

Initial Stages 2021, 01/11/2021, Israel (Zoom conference)

Ming Li and Vladimir Skokov, in preparation

Outline

- Introduction. (*leading order result, why first saturation correction*)
- Next to Leading Order Solutions of Classical Yang-Mills Equations in the Dilute-Dense Regime. (*order-g^3 gluon fields*)
- First Saturation Correction to Single Inclusive Soft Gluon Production from the LSZ Reduction Formula. (*order-g^5 production amplitude*)
- Summary and Outlook.

Review: Single Soft Gluon Production at Leading Order

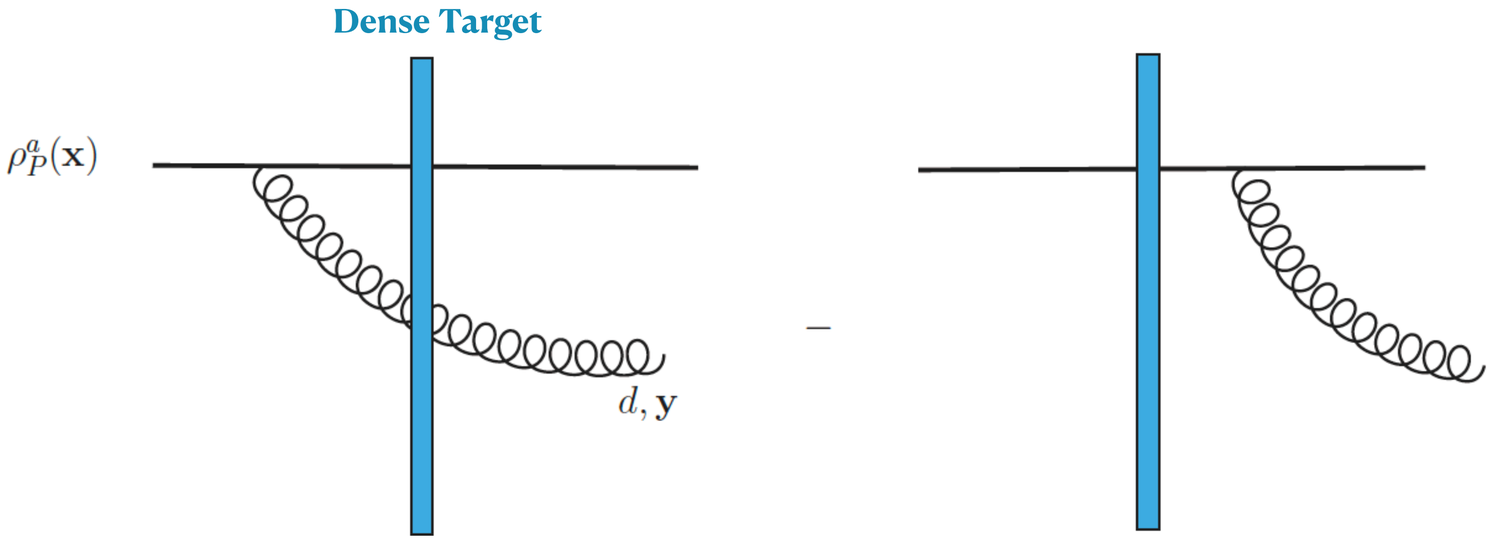

Gluon emission BEFORE collisions

Gluon emission AFTER collisions

Kovchegov, Mueller (1998)
Kopeliovich, Tarasov, Schafer (1999)
Kovner, Wiedemann (2001)
Dumitru, McLerran (2002)

$$A^{i,d}(\mathbf{k}) = \int d^2\mathbf{x} e^{i\mathbf{k}\cdot\mathbf{x}} \underline{\alpha^{i,a}_{P,(1)}(\mathbf{x}) U^{ad}(\mathbf{x})} - \frac{i\mathbf{k}^i}{k_\perp^2} \int d^2\mathbf{x} e^{i\mathbf{k}\cdot\mathbf{x}} \underline{\rho_P^a(\mathbf{x}) U^{ad}(\mathbf{x})}$$

Color charge density eikonally rotated in color space

$$\alpha^{i,a}_{P,(1)}(\mathbf{k}) = \frac{i\mathbf{k}^i}{k_\perp^2} \rho_P^a(\mathbf{k})$$

Leading order Weisacker-Williams field eikonally rotated in color space

Two Polarizations: $b_\eta(\mathbf{k}) = -i\mathbf{k}^i A^i(\mathbf{k}), \quad b_\perp(\mathbf{k}) = -i\epsilon^{ij}\mathbf{k}^i A^j(\mathbf{k})$

Leading order in the dilute projectile but all order resumed for the dense target

$$\sim \alpha_s \rho_P^2 UU$$

Single Gluon Production:

$$\frac{dN}{d^2\mathbf{k}}\Big|_{g^2} = \frac{g^2}{(2\pi)^2} \frac{1}{\pi k_\perp^2} \left(|b_\eta(\mathbf{k})|^2 + |b_\perp(\mathbf{k})|^2 \right)$$

Why beyond the Leading Order: First Saturation Correction

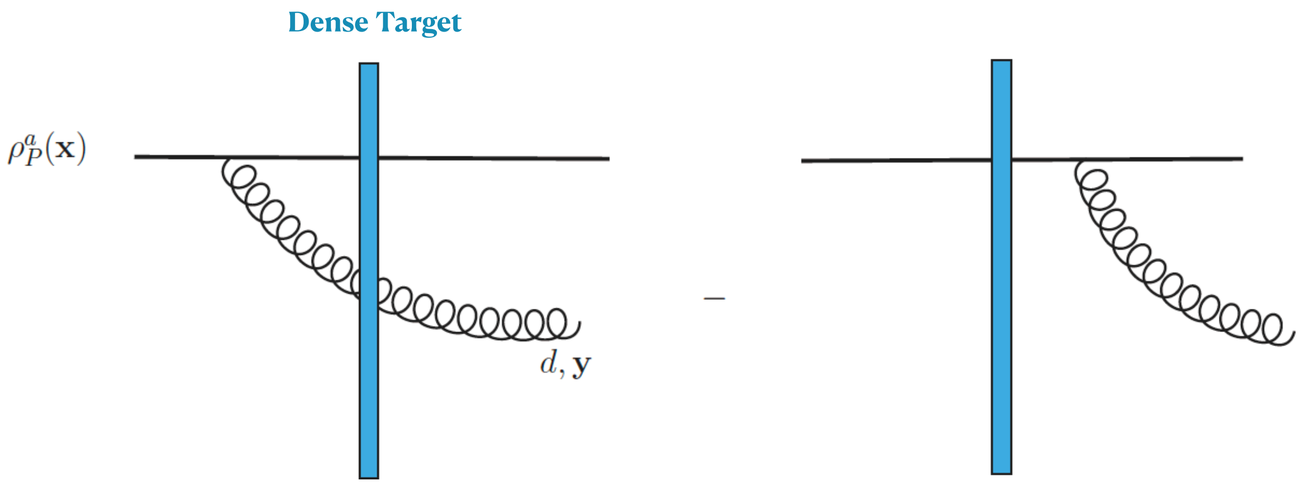

Gluon emission BEFORE collisions

Gluon emission AFTER collisions

Single Gluon Production:

$$\left.\frac{dN}{d^2\mathbf{k}}\right|_{g^2} = \frac{g^2}{(2\pi)^2}\frac{1}{\pi k_\perp^2}\left(|b_\eta(\mathbf{k})|^2 + |b_\perp(\mathbf{k})|^2\right)$$

$$\sim \alpha_s \rho_P^2 UU$$

$\left.\frac{dN}{d^2\mathbf{k}}\right|_{g^2}$ is symmetric with respect to $\mathbf{k} \leftrightarrow -\mathbf{k}$.

Schenke, Schlichting, Venugopalan (2015)
McLerran, Skokov (2017)
Kovchegov, Skokov (2018)

1. **Leading order result only contains even harmonics, no odd harmonics. No initial state interactions or final state interactions .**

2. **High multiplicity events in pA collisions. Rare configuration of proton wave function.**

3. **Towards the ultimate dense-dense regime. ($Q_s^2 \sim \alpha_s^2 \rho^2$)**

$$\frac{dN}{d^2\mathbf{k}} = \left\langle \frac{dN}{d^2\mathbf{k}}(\rho_P, \rho_T)\right\rangle_{\rho_P,\rho_T} = \frac{1}{\alpha_s}\sum_{n=1}^{\infty}\left(\frac{Q_{s,P}^2}{k_\perp^2}\right)^n f_n\left(\frac{Q_{s,T}^2}{k_\perp^2}\right)$$

<u>First Saturation Correction</u>

$$f_2\left(\frac{Q_{s,T}^2}{k_\perp^2}\right)$$

Saturation Corrections: Power Counting

General Perturbative Corrections vs Saturation Corrections *Kovchegov (1997)*

Example: small-x gluon distribution in the proton

$N_\perp$ Number of color charges per unit area

Order-g

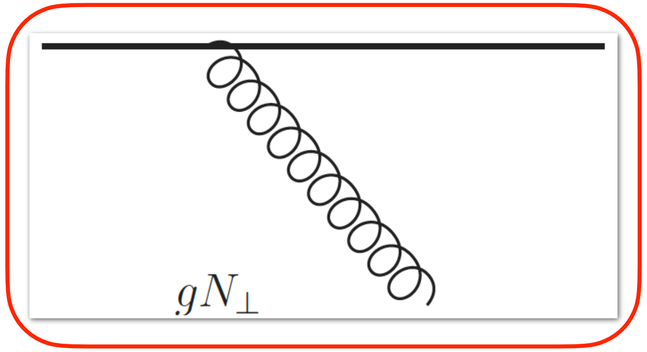

Order-g^3

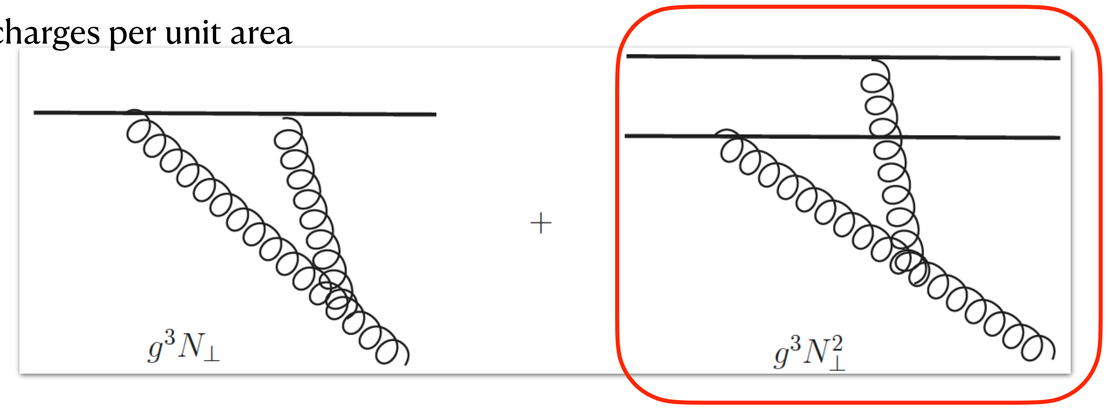

Order-g^5

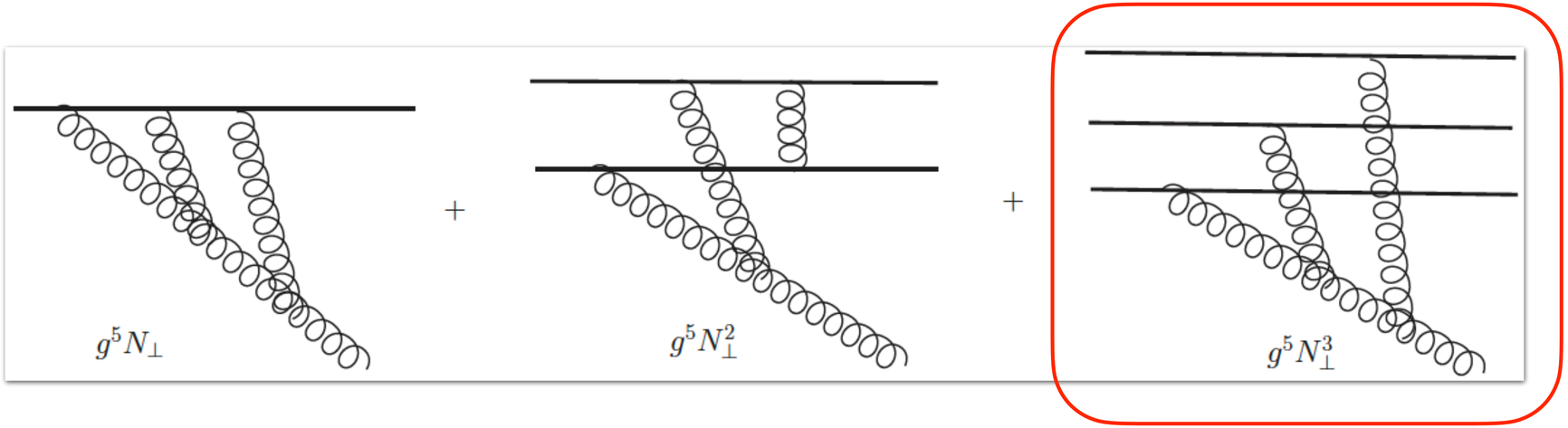

Two Approaches in Calculating the First Saturation Correction

- **Diagrammatic Approach : Draw all the contributing Feynmann diagrams and use the light-cone perturbation theory in the eikonal limit**

Chirilli, Kovchegov, Wertepny (2015)

Order-g^3

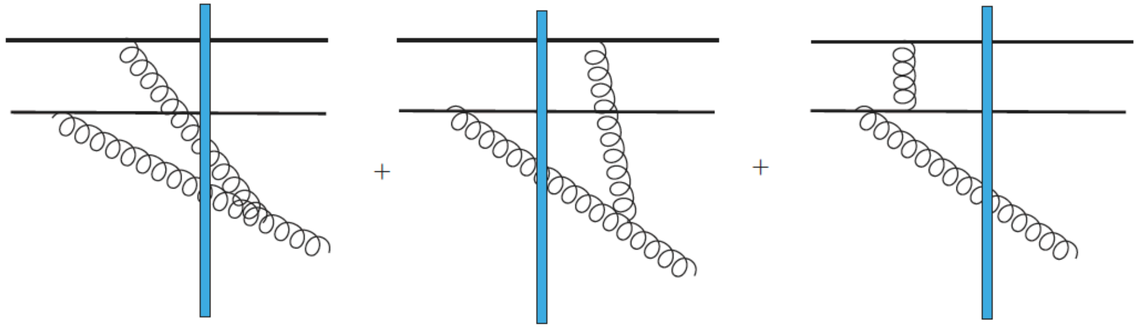

23 more diagrams

Order-g^5

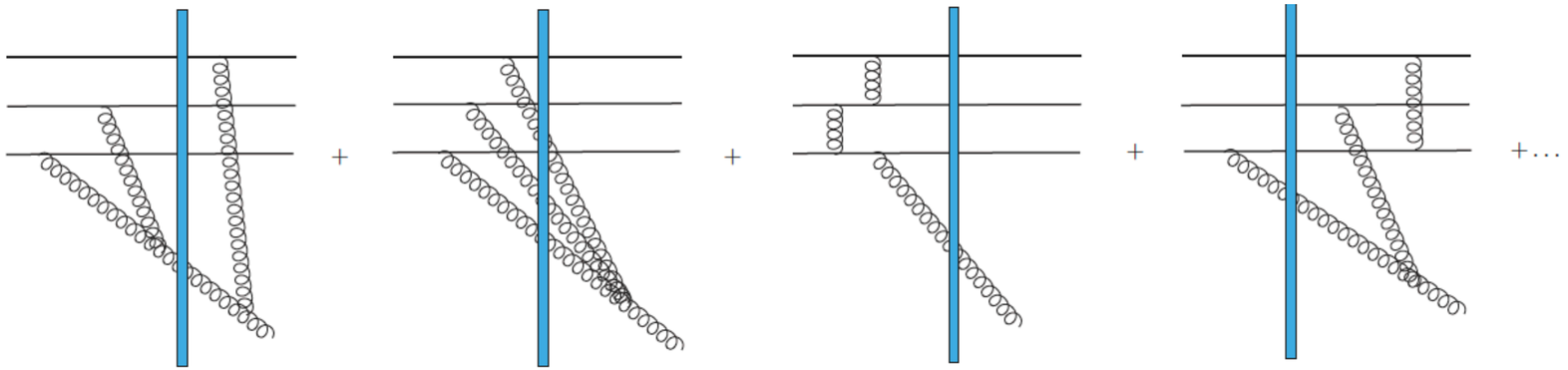

# of diagrams ?

First Saturation Correction $\sim \mathcal{M}^*_{(3)}\mathcal{M}_{(3)} + \mathcal{M}^*_{(1)}\mathcal{M}_{(5)} + \mathcal{M}_{(1)}\mathcal{M}^*_{(5)}$

Only $\mathcal{M}_{(1)}$ and $\mathcal{M}_{(3)}$ have been calculated.

Two Approaches in Calculating the First Saturation Correction

- **CGC Approach: solve the classical Yang-Mills equations in the dilute-dense regime and use the LSZ reduction formula**

Schenke, Schlichting, Venugopalan (2015)

McLerran, Skokov (2017)

Define Asymptotic Creation Operators:

$$\hat{a}^{a\dagger}_{\eta}(\mathbf{k}) = -\, i\tau\sqrt{\frac{\pi}{4}}\left(H_1^{(2)}(k_\perp\tau)\overleftrightarrow{\partial_\tau}\tilde{\beta}^a(\tau,\mathbf{k})\right)\Big|_{\tau=+\infty},$$

$$\hat{a}^{a\dagger}_{\perp}(\mathbf{k}) = -\, i\tau\sqrt{\frac{\pi}{4}}\left(H_0^{(2)}(k_\perp\tau)\overleftrightarrow{\partial_\tau}\beta^a_\perp(\tau,\mathbf{k})\right)\Big|_{\tau=+\infty}$$

Projection on asymptotic free particle state at infinite time through the Hankel functions $H_1^{(2)}(k_\perp\tau) \sim \sqrt{\frac{2}{\pi k_\perp \tau}}e^{-i(k_\perp\tau-\frac{3}{4}\pi)}, \quad H_0^{(2)}(k_\perp\tau) \sim \sqrt{\frac{2}{\pi k_\perp \tau}}e^{-i(k_\perp\tau-\frac{1}{4}\pi)}$

Single Gluon Production: $$\frac{dN}{d^2\mathbf{k}} = \frac{1}{(2\pi)^2}\left(\hat{a}^\dagger_\eta(\mathbf{k})\hat{a}_\eta(\mathbf{k}) + \hat{a}^\dagger_\perp(\mathbf{k})\hat{a}_\perp(\mathbf{k})\right)$$

For first saturation correction, creation operators at order-g^3 and order-g^5 are needed.

$$\boxed{\tilde{\beta}^{(1)}(\tau,\mathbf{k}), \beta^{(1)}_\perp(\tau,\mathbf{k})}$$

$$\boxed{\tilde{\beta}^{(3)}(\tau,\mathbf{k}), \beta^{(3)}_\perp(\tau,\mathbf{k})}$$

Classical Yang-Mills Equations and Initial Conditions

Classical Yang-Mills equations in the Fock-Schwinger gauge, assuming boost-invariance

$$A^+ = x^+\alpha,\ \ A^- = -x^-\alpha,\ \ A^i = \alpha^i$$

$$\partial_\tau^2\alpha + \frac{3}{\tau}\partial_\tau\alpha - [D_i,[D_i,\alpha]] = 0\,,$$

$$-ig[\alpha,\tau\partial_\tau\alpha] + [D_i,\frac{1}{\tau}\partial_\tau\alpha_i] = 0\,,$$

$$\frac{1}{\tau}\partial_\tau\alpha_i + \partial_\tau^2\alpha_i - ig\tau^2[\alpha,[D_i,\alpha] - D_jF_{ji} = 0.$$

Initial Conditions

$$\alpha(\tau=0,\mathbf{x}) = \frac{ig}{2}[\alpha_P^i(\mathbf{x}),\alpha_T^i(\mathbf{x})],$$

$$\alpha^i(\tau=0,\mathbf{x}) = \alpha_P^i(\mathbf{x}) + \alpha_T^i(\mathbf{x}).$$

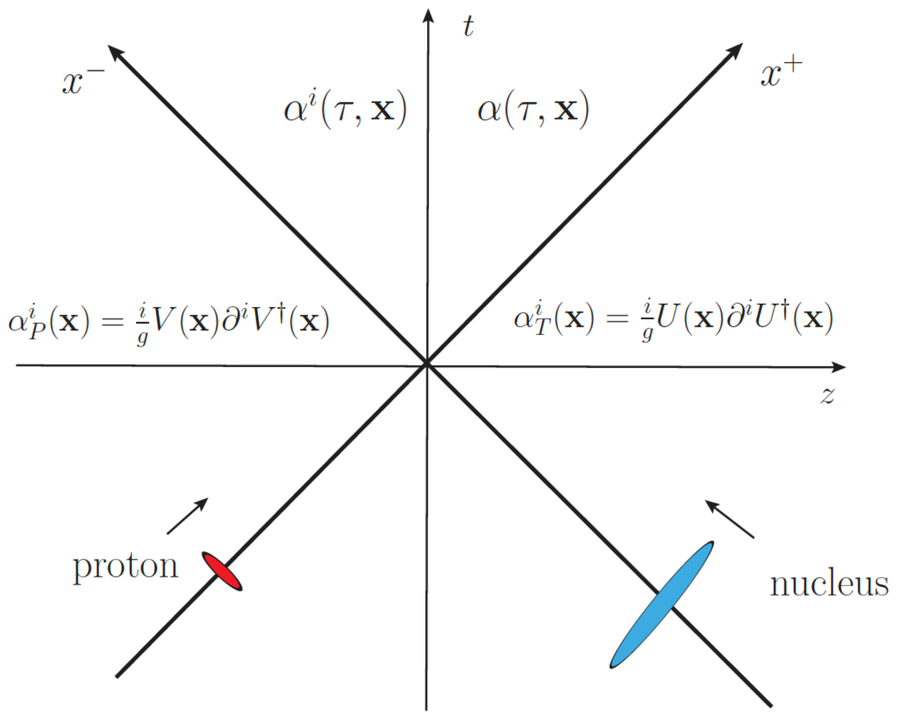

1. Only two of the three scalar fields are independent degrees of freedom

$$\alpha(\tau,\mathbf{x}),\ \ \alpha^i(\tau,\mathbf{x}), \text{with } i = 1,2$$

2. The gradient of transverse field is the auxiliary field.

$$\partial^i\alpha^i(\tau,\mathbf{x})$$

In the dilute-dense regime, both the equations and the initial conditions are expanded as power series of coupling constant g.

$$\alpha(\tau,\mathbf{x}) = \sum_{n=0}^{\infty} g^n\alpha^{(n)}(\tau,\mathbf{x}),\ \ \alpha_i(\tau,\mathbf{x}) = \sum_{n=0}^{\infty} g^n\alpha_i^{(n)}(\tau,\mathbf{x})$$

Residual Gauge Fixing: Coulomb sub gauge vs non-Coulomb sub gauge

1. The Fock-Schwinger gauge $x^- A^+ + x^+ A^- = 0$ is realized by the parameterization $A^+ = x^+ \alpha,\ A^- = -x^- \alpha,\ A^i = \alpha^i$

2. Within the Fock-Schwinger gauge, one has the freedom to perform sub gauge transformations that only depend on transverse coordinates. It doesn't change the form of the equations but will change the initial conditions.

Fock-Schwinger gauge without residual gauge fixing

$$\alpha(\tau = 0, \mathbf{x}) = \frac{ig}{2}[\alpha_P^i(\mathbf{x}), \alpha_T^i(\mathbf{x})],$$
$$\alpha^i(\tau = 0, \mathbf{x}) = \alpha_P^i(\mathbf{x}) + \alpha_T^i(\mathbf{x}).$$

Gauge transformation by the target Wilson line $U(x)$

$$\zeta(\tau = 0, \mathbf{x}) = \frac{1}{2}\left(\partial^i(U^\dagger \alpha_P^i U) - U^\dagger \partial^i \alpha_P^i U\right),$$
$$\zeta^i(\tau = 0, \mathbf{x}) = U^\dagger \alpha_P^i U.$$

non-Coulomb sub gauge

Additional gauge transformation by $W(x)$ **to ensure** $\partial^i \beta^i(\tau = 0, \mathbf{x}) = 0$ *Blaizot, Lappi, Mehtar-Tani (2010)*

$$\beta(\tau = 0, \mathbf{x}) = \frac{1}{2}\mathcal{W}^\dagger\left(\partial^i(U^\dagger \alpha_P^i U) - U^\dagger \partial^i \alpha_P^i U\right)\mathcal{W},$$
$$\beta^i(\tau = 0, \mathbf{x}) = \mathcal{W}^\dagger U^\dagger \alpha_P^i U \mathcal{W} + \frac{i}{g}\mathcal{W}^\dagger \partial^i \mathcal{W}.$$

(initial time) Coulomb sub gauge

$$\mathcal{W}(\mathbf{x}) = e^{ig\Sigma(\mathbf{x})},\ \text{with}\ \Sigma(\mathbf{x}) = \Sigma_{(1)}(\mathbf{x}) + \Sigma_{(3)}(\mathbf{x}) + \Sigma_{(5)}(\mathbf{x}) + \ldots$$

$$\Sigma_{(1)} = \frac{\partial^l}{\partial^2}(U^\dagger \alpha_{P,(1)}^l U),$$
$$\Sigma_{(3)} = \frac{\partial^l}{\partial^2}\left(U^\dagger \alpha_{P,(3)}^l U - i[\Sigma_{(1)}, U^\dagger \alpha_{P,(1)}^l U] + \frac{1}{2}i[\Sigma_{(1)}, \partial^l \Sigma_{(1)}]\right),$$
$$\Sigma_{(5)} = \frac{\partial^l}{\partial^2}\Big(U^\dagger \alpha_{P,(5)}^l U - i[\Sigma_{(1)}, U^\dagger \alpha_{P,(3)}^l U] - i[\Sigma_{(3)}, U^\dagger \alpha_{P,(1)}^l U] - \frac{1}{2}[\Sigma_{(1)}, [\Sigma_{(1)}, U^\dagger \alpha_{P,(1)}^l U]]$$
$$+ \frac{1}{2}i[\Sigma_{(1)}, \partial^l \Sigma_{(3)}] + \frac{1}{2}i[\Sigma_{(3)}, \partial^l \Sigma_{(1)}] + \frac{1}{6}[\Sigma_{(1)}, [\Sigma_{(1)}, \partial^l \Sigma_{(1)}]]\Big).$$

Classical Gluon Fields at the Leading Order

Order-g Classical Yang-Mills Equations

$$\tau^2\partial_\tau^2\tilde{\beta}^{(1)} + \tau\partial_\tau\tilde{\beta}^{(1)} - \tilde{\beta}^{(1)} - \tau^2\partial_i^2\tilde{\beta}^{(1)} = 0\,,$$
$$\partial_i\partial_\tau\beta_i^{(1)} = 0\,,$$
$$\tau^2\partial_\tau^2\beta_i^{(1)} + \tau\partial_\tau\beta_i^{(1)} - \tau^2(\partial^2\delta_{ij} - \partial_j\partial_i)\beta_j^{(1)} = 0,$$

These are free field equations. In momentum space, they are just the standard Bessel equations

Solutions

$$\beta^{(1)}(\tau,\mathbf{k}) = b_\eta(\mathbf{k})\frac{J_1(k_\perp\tau)}{k_\perp\tau},$$
$$\beta_i^{(1)}(\tau,\mathbf{k}) = \frac{-i\epsilon_{il}\mathbf{k}_l}{k_\perp^2}b_\perp(\mathbf{k})J_0(k_\perp\tau).$$

$$b_\eta(\mathbf{k}) = 2\beta^{(1)}(\tau=0,\mathbf{k}),$$
$$b_\perp(\mathbf{k}) = -i\epsilon_{ij}\mathbf{k}_i\beta_j^{(1)}(\tau=0,\mathbf{k}).$$

Classical Gluon Fields at Next to Leading Order

Order-g^3 Yang-Mills equations

$$\tau^2\partial_\tau^2\tilde{\beta}^{(3)} + \tau\partial_\tau\tilde{\beta}^{(3)} - \tilde{\beta}^{(3)} - \tau^2\partial_i^2\tilde{\beta}^{(3)} = \boxed{-i\tau^2\partial_i[\beta_i^{(1)}, \tilde{\beta}^{(1)}] - i\tau^2[\beta_i^{(1)}, \partial_i\tilde{\beta}^{(1)}]}, \quad S_\eta^{(3)}$$

$$\partial_\tau\partial_i\beta_i^{(3)} = \boxed{i[\beta_i^{(1)}, \partial_\tau\beta_i^{(1)}] + i[\tilde{\beta}^{(1)}, \partial_\tau\tilde{\beta}^{(1)}]}, \quad S_\Lambda^{(3)}$$

$$\tau^2\partial_\tau^2\beta_i^{(3)} + \tau\partial_\tau\beta_i^{(3)} - \tau^2(\partial^2\delta_{ij} - \partial_j\partial_i)\beta_j^{(3)} = \boxed{i\tau^2[\tilde{\beta}^{(1)}, \partial_i\tilde{\beta}^{(1)}] - i\tau^2\partial_j[\beta_j^{(1)}, \beta_i^{(1)}] - i\tau^2[\beta_j^{(1)}, \partial_j\beta_i^{(1)} - \partial_i\beta_j^{(1)}]}. \quad S_i^{(3)}$$

Solving inhomogeneous second order differential equations: <u>the method of variation of parameters</u>

$$\tilde{\beta}^{(3)}(\tau, \mathbf{k}) = C_1 J_1(x) + C_2 Y_1(x) + \frac{\pi}{2}\int_0^x dz (J_1(z)Y_1(x) - J_1(x)Y_1(z))\frac{S_\eta^{(3)}(z)}{z}$$

$$\beta_\perp^{(3)}(\tau, \mathbf{k}) = D_1 J_0(x) + D_2 Y_0(x) + \frac{\pi}{2}\int_0^x dz\,(J_0(z)Y_0(x) - J_0(x)Y_0(z))\,\frac{S_\perp^{(3)}(z)}{z}$$

$$\Lambda^{(3)}(\tau, \mathbf{k}) = -\frac{1}{k_\perp^2}\int_0^\tau d\tau' S_\Lambda^{(3)}(\tau', \mathbf{k})$$

$$\beta_i^{(3)}(\tau, \mathbf{k}) = \frac{-i\epsilon^{ij}\mathbf{k}_j}{k_\perp}\beta_\perp^{(3)}(\tau, \mathbf{k}) - i\mathbf{k}_i\Lambda^{(3)}(\tau, \mathbf{k})$$

The Challenge: indefinite integrals of products of three Bessel functions.

The Idea: express a product of two Bessel functions in terms of angular integral of one Bessel function

<u>The Graf's Formula</u>

The Major Mathematical Technique

The Graf's Formula

$$J_{n+m}(az)J_m(bz) = \int_{-\pi}^{\pi} \frac{d\phi}{2\pi} e^{-im\phi} e^{in\Psi} J_n(wz)$$

with $\quad w = \sqrt{b^2 + a^2 - 2ab\cos\phi},$

$$e^{i\Psi} = \frac{(a - b\cos\phi) + i(b\sin\phi)}{w}.$$

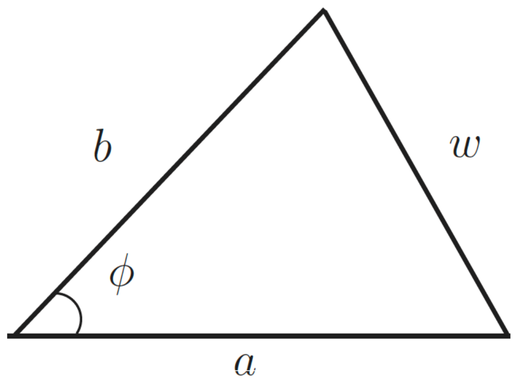

$$|a - b| \leq w \leq a + b$$

A few examples:

$$J_0(az)J_0(bz) = \int_{-\pi}^{\pi} \frac{d\phi}{2\pi} J_0(wz)$$

$$J_0(az)J_1(bz) = \int_{-\pi}^{\pi} \frac{d\phi}{2\pi} \frac{b - a\cos\phi}{w} J_1(wz)$$

$$J_1(az)J_1(bz) = \int_{-\pi}^{\pi} \frac{d\phi}{2\pi} \cos\phi J_0(wz).$$

Classical Gluon Fields at Next to Leading Order

The Solutions:

$$\beta^{(3)}(\tau,\mathbf{k}) = 2\beta^{(3)}(\tau=0,\mathbf{k})\frac{J_1(k_\perp\tau)}{k_\perp\tau} - i\int\frac{d^2\mathbf{p}}{(2\pi)}\Big[b_\perp(\mathbf{p}),b_\eta(\mathbf{k}-\mathbf{p})\Big]\frac{\mathbf{k}\times\mathbf{p}}{p_\perp^2|\mathbf{k}-\mathbf{p}|^2}\int_{-\pi}^{\pi}\frac{d\phi}{2\pi}\Big(1+\frac{2\mathbf{k}\cdot(\mathbf{k}-\mathbf{p})}{w_\perp^2-k_\perp^2}\Big)\Big(\frac{J_1(w_\perp\tau)}{w_\perp\tau}-\frac{J_1(k_\perp\tau)}{k_\perp\tau}\Big)$$

$$\beta_\perp^{(3)}(\tau,\mathbf{k}) = \beta_\perp^{(3)}(\tau=0,\mathbf{k})J_0(k_\perp\tau) + \frac{i}{k_\perp}\int\frac{d^2\mathbf{p}}{(2\pi)^2}\Big[b_\eta(\mathbf{p}),b_\eta(\mathbf{k}-\mathbf{p})\Big]\frac{\mathbf{k}\times\mathbf{p}}{2p_\perp^2|\mathbf{k}-\mathbf{p}|^2}\int_{-\pi}^{\pi}\frac{d\phi}{2\pi}\Big(1+\frac{2\mathbf{p}\cdot(\mathbf{k}-\mathbf{p})}{w_\perp^2-k_\perp^2}\Big)(J_0(w_\perp\tau)-J_0(k_\perp\tau))$$

$$-\frac{i}{k_\perp}\int\frac{d^2\mathbf{p}}{(2\pi)^2}\Big[b_\perp(\mathbf{p}),b_\perp(\mathbf{k}-\mathbf{p})\Big]\frac{(\mathbf{k}\times\mathbf{p})(-\mathbf{p}\cdot\mathbf{k}+p_\perp^2+k_\perp^2)}{p_\perp^2|\mathbf{k}-\mathbf{p}|^2}\int_{-\pi}^{\pi}\frac{d\phi}{2\pi}\frac{1}{w_\perp^2-k_\perp^2}(J_0(w_\perp\tau)-J_0(k_\perp\tau))$$

$$\Lambda^{(3)}(\tau,\mathbf{k}) = -\frac{i}{k_\perp^2}\int\frac{d^2\mathbf{p}}{(2\pi)^2}\Big[b_\eta(\mathbf{p}),b_\eta(\mathbf{k}-\mathbf{p})\Big]\frac{\mathbf{k}\cdot(\mathbf{k}-2\mathbf{p})}{4p_\perp^2|\mathbf{k}-\mathbf{p}|^2}\int_{-\pi}^{\pi}\frac{d\phi}{2\pi}\Big(1-\frac{p_\perp^2+|\mathbf{k}-\mathbf{p}|^2}{w_\perp^2}\Big)(1-J_0(w_\perp\tau))$$

$$-\frac{i}{k_\perp^2}\int\frac{d^2\mathbf{p}}{(2\pi)^2}\Big[b_\perp(\mathbf{p}),b_\perp(\mathbf{k}-\mathbf{p})\Big]\frac{\mathbf{k}\cdot(\mathbf{k}-2\mathbf{p})\mathbf{p}\cdot(\mathbf{k}-\mathbf{p})}{2p_\perp^2|\mathbf{k}-\mathbf{p}|^2}\int_{-\pi}^{\pi}\frac{d\phi}{2\pi}\frac{1}{w_\perp^2}(1-J_0(w_\perp\tau))$$

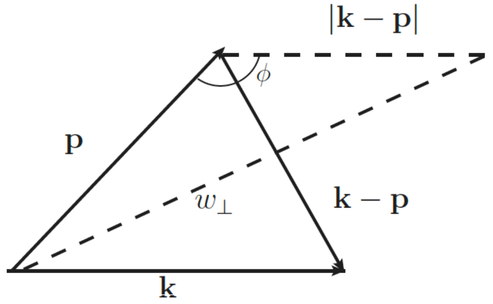

$$w_\perp = \sqrt{p_\perp^2+|\mathbf{k}-\mathbf{p}|^2-2p_\perp|\mathbf{k}-\mathbf{p}|\cos\phi}$$

$$|p_\perp-|\mathbf{k}-\mathbf{p}|| \le w_\perp \le p_\perp+|\mathbf{k}-\mathbf{p}|$$

$$\beta_i^{(3)}(\tau,\mathbf{k}) = \frac{-i\epsilon^{ij}\mathbf{k}_j}{k_\perp}\beta_\perp^{(3)}(\tau,\mathbf{k}) - i\mathbf{k}_i\Lambda^{(3)}(\tau,\mathbf{k})$$

Single Inclusive Gluon Productions from the LSZ Reduction Formula

Asymptotic free particle creation operators

$$\hat{a}^{a\dagger}_{\eta}(\mathbf{k}) = -i\tau\sqrt{\frac{\pi}{4}}\left(H^{(2)}_1(k_\perp\tau)\overleftrightarrow{\partial_\tau}\tilde{\beta}^a(\tau,\mathbf{k})\right)\Big|_{\tau=+\infty},$$

$$\hat{a}^{a\dagger}_{\perp}(\mathbf{k}) = -i\tau\sqrt{\frac{\pi}{4}}\left(H^{(2)}_0(k_\perp\tau)\overleftrightarrow{\partial_\tau}\beta^a_\perp(\tau,\mathbf{k})\right)\Big|_{\tau=+\infty}$$

Single gluon production

$$\frac{dN}{d^2\mathbf{k}} = \frac{1}{(2\pi)^2}\left(\hat{a}^\dagger_\eta(\mathbf{k})\hat{a}_\eta(\mathbf{k}) + \hat{a}^\dagger_\perp(\mathbf{k})\hat{a}_\perp(\mathbf{k})\right)$$

Using the equations of motion

$$\hat{a}^\dagger_\eta(\mathbf{k}) = \underbrace{\boxed{\frac{1}{\sqrt{\pi}k_\perp}2\beta(\tau=0,\mathbf{k})}}_{\mathfrak{S}_\eta} - \underbrace{i\sqrt{\frac{\pi}{4}}\int_0^\infty\frac{d\tau}{\tau}H^{(2)}_1(k_\perp\tau)S_\eta(\tau,\mathbf{k})}_{\mathfrak{B}_\eta},$$

$$\hat{a}^\dagger_\perp(\mathbf{k}) = \underbrace{\boxed{\frac{1}{\sqrt{\pi}}\beta_\perp(\tau=0,\mathbf{k})}}_{\mathfrak{S}_\perp} - \underbrace{i\sqrt{\frac{\pi}{4}}\int_0^\infty\frac{d\tau}{\tau}H^{(2)}_0(k_\perp\tau)S_\perp(\tau,\mathbf{k})}_{\mathfrak{B}_\perp}.$$

Power series expansions of the surface and bulk terms

$$\mathfrak{S}_\gamma = g\mathfrak{S}^{(1)}_\gamma + g^3\mathfrak{S}^{(3)}_\gamma + g^5\mathfrak{S}^{(5)}_\gamma + \dots$$

$$\mathfrak{B}_\gamma = g^3\mathfrak{B}^{(3)}_\gamma + g^5\mathfrak{B}^{(5)}_\gamma + \dots$$

First saturation correction

$$\frac{dN}{d^2\mathbf{k}}\Big|_{g^6} = \frac{1}{(2\pi)^2}\sum_{\gamma=\eta,\perp}|\mathfrak{S}^{(3)}_\gamma(\mathbf{k}) + \mathfrak{B}^{(3)}_\gamma(\mathbf{k})|^2 + \mathfrak{S}^{(1)*}_\gamma(\mathbf{k})\left(\mathfrak{S}^{(5)}_\gamma(\mathbf{k}) + \mathfrak{B}^{(5)}_\gamma(\mathbf{k})\right) + \mathfrak{S}^{(1)}_\gamma(\mathbf{k})\left(\mathfrak{S}^{(5)*}_\gamma(\mathbf{k}) + \mathfrak{B}^{(5)*}_\gamma(\mathbf{k})\right)$$

To be calculated

McLerran, Skokov (2017) **Have been calculated**

Calculating the First Saturation Correction: bulk terms

$$\frac{dN}{d^2\mathbf{k}}\Big|_{g^6} = \frac{1}{(2\pi)^2}\sum_{\gamma=\eta,\perp} |\mathfrak{S}_\gamma^{(3)}(\mathbf{k}) + \mathfrak{B}_\gamma^{(3)}(\mathbf{k})|^2 + \mathfrak{S}_\gamma^{(1)*}(\mathbf{k})\left(\mathfrak{S}_\gamma^{(5)}(\mathbf{k}) + \mathfrak{B}_\gamma^{(5)}(\mathbf{k})\right) + \mathfrak{S}_\gamma^{(1)}(\mathbf{k})\left(\mathfrak{S}_\gamma^{(5)*}(\mathbf{k}) + \mathfrak{B}_\gamma^{(5)*}(\mathbf{k})\right)$$

Bulk term for Longitudinal polarization

$$\mathfrak{B}_\eta^{(5)}(\mathbf{k}) = -i\sqrt{\frac{\pi}{4}}\int_0^\infty \frac{d\tau}{\tau} H_1^{(2)}(k_\perp\tau) S_\eta^{(5)}(\tau,\mathbf{k})$$

Order-g^5 source term

$$\begin{aligned} S_\eta^{(5)}(\tau,\mathbf{k}) = &-\tau^3\int\frac{d^2\mathbf{q}}{(2\pi)^2}(-\mathbf{k}-\mathbf{q})_i\left[\beta^{(3)}(\tau,\mathbf{q}),\beta_i^{(1)}(\tau,\mathbf{k}-\mathbf{q})\right] \\ &-\tau^3\int\frac{d^2\mathbf{q}}{(2\pi)^2}(2\mathbf{k}-\mathbf{q})_i\left[\beta_i^{(3)}(\tau,\mathbf{q}),\beta^{(1)}(\tau,\mathbf{k}-\mathbf{q})\right] \\ &-\tau^3\int\frac{d^2\mathbf{q}}{(2\pi)^2}\int\frac{d^2\mathbf{p}}{(2\pi)^2}\left[\beta_i^{(1)}(\tau,\mathbf{k}-\mathbf{q}),\left[\beta_i^{(1)}(\tau,\mathbf{p}),\beta^{(1)}(\tau,\mathbf{q}-\mathbf{p})\right]\right]. \end{aligned}$$

Involving definite integrals of products of three Bessel functions

$$\int_0^\infty d\tau\tau J_0(|\mathbf{k}-\mathbf{q}|\tau)J_1(q_\perp\tau)H_1^{(2)}(k_\perp\tau) = \frac{1}{\pi q_\perp k_\perp}\left(\frac{\mathbf{k}\cdot\mathbf{q}}{|\mathbf{k}\times\mathbf{q}|}+i\right),$$

$$\int_0^\infty d\tau\tau J_0(|\mathbf{k}-\mathbf{q}|\tau)J_1(w_\perp\tau)H_1^{(2)}(k_\perp\tau) = L_{011}(|\mathbf{k}-\mathbf{q}|,w_\perp,k_\perp).$$

Prudnikov, Brychkov, Marichev "Integrals and Series, Volume 2, Special Functions, (1986)

Results: bulk term for longitudinal polarization

$$\mathfrak{B}_\eta^{(5)}(\mathbf{k}) = \frac{1}{\sqrt{\pi}k_\perp}\int\frac{d^2\mathbf{q}}{(2\pi)^2}\left[2\beta^{(3)}(\tau=0,\mathbf{q}), b_\perp(\mathbf{k}-\mathbf{q})\right]\frac{\mathbf{k}\times\mathbf{q}}{q_\perp^2|\mathbf{k}-\mathbf{q}|^2}\left(\frac{\mathbf{k}\cdot\mathbf{q}}{|\mathbf{k}\times\mathbf{q}|}+i\right)+\frac{1}{\sqrt{\pi}k_\perp}\int\frac{d^2\mathbf{q}}{(2\pi)^2}\left[q_\perp\beta_\perp^{(3)}(\tau=0,\mathbf{q}), b_\eta(\mathbf{k}-\mathbf{q})\right]\frac{\mathbf{k}\times\mathbf{q}}{q_\perp^2|\mathbf{k}-\mathbf{q}|^2}\left(\frac{\mathbf{k}\cdot(\mathbf{k}-\mathbf{q})}{|\mathbf{k}\times\mathbf{q}|}+i\right)$$
$$+\frac{i}{\sqrt{\pi}k_\perp}\int\frac{d^2\mathbf{q}}{(2\pi)^2}\frac{d^2\mathbf{p}}{(2\pi)^2}\left[[b_\perp(\mathbf{p}), b_\eta(\mathbf{q}-\mathbf{p})], b_\perp(\mathbf{k}-\mathbf{q})\right]\frac{I_1(\mathbf{p},\mathbf{q},\mathbf{k})}{p_\perp^2|\mathbf{q}-\mathbf{p}|^2|\mathbf{k}-\mathbf{q}|^2}+\frac{i}{\sqrt{\pi}k_\perp}\int\frac{d^2\mathbf{q}}{(2\pi)^2}\frac{d^2\mathbf{p}}{(2\pi)^2}\left[\left[b_\eta(\mathbf{p}), b_\eta(\mathbf{q}-\mathbf{p})\right], b_\eta(\mathbf{k}-\mathbf{q})\right]\frac{I_2(\mathbf{p},\mathbf{q},\mathbf{k})}{p_\perp^2|\mathbf{q}-\mathbf{p}|^2|\mathbf{k}-\mathbf{q}|^2}$$
$$+\frac{i}{\sqrt{\pi}k_\perp}\int\frac{d^2\mathbf{q}}{(2\pi)^2}\frac{d^2\mathbf{p}}{(2\pi)^2}\left[\left[b_\perp(\mathbf{p}), b_\perp(\mathbf{q}-\mathbf{p})\right], b_\eta(\mathbf{k}-\mathbf{q})\right]\frac{I_3(\mathbf{p},\mathbf{q},\mathbf{k})}{p_\perp^2|\mathbf{q}-\mathbf{p}|^2|\mathbf{k}-\mathbf{q}|^2}$$

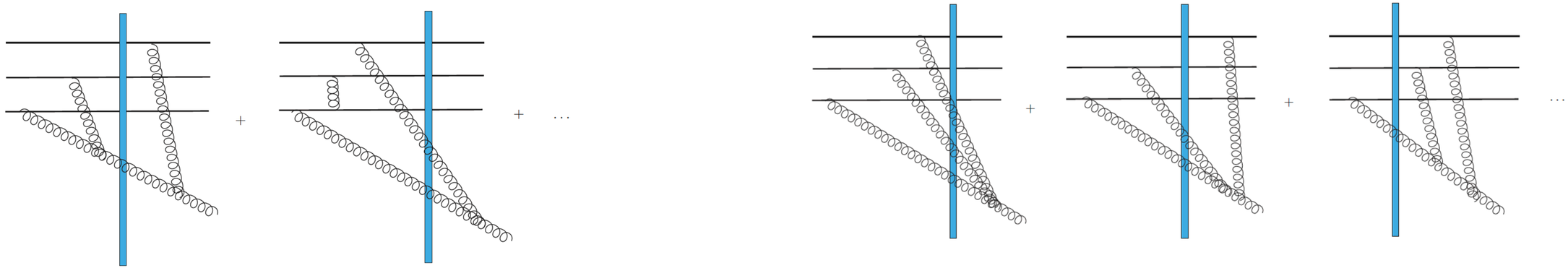

The bulk term and the surface term together give the order-g^5 amplitude for the longitudinal polarization

$$\mathfrak{S}_\eta^{(5)}(\mathbf{k}) = \frac{1}{\sqrt{\pi}k_\perp}2\beta^{(5)}(\tau=0,\mathbf{k})$$

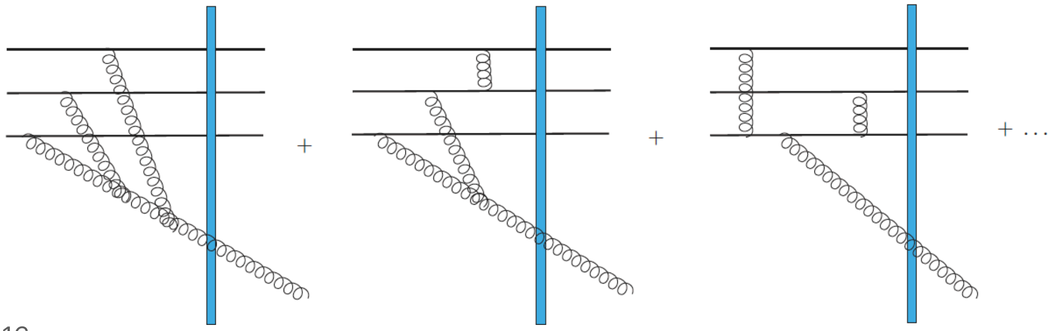

Results: bulk term for longitudinal polarization

$$\mathfrak{B}_\eta^{(5)}(\mathbf{k}) = \frac{1}{\sqrt{\pi}k_\perp}\int\frac{d^2\mathbf{q}}{(2\pi)^2}\left[2\beta^{(3)}(\tau=0,\mathbf{q}), b_\perp(\mathbf{k}-\mathbf{q})\right]\frac{\mathbf{k}\times\mathbf{q}}{q_\perp^2|\mathbf{k}-\mathbf{q}|^2}\left(\frac{\mathbf{k}\cdot\mathbf{q}}{|\mathbf{k}\times\mathbf{q}|}+i\right) + \frac{1}{\sqrt{\pi}k_\perp}\int\frac{d^2\mathbf{q}}{(2\pi)^2}\left[q_\perp\beta_\perp^{(3)}(\tau=0,\mathbf{q}), b_\eta(\mathbf{k}-\mathbf{q})\right]\frac{\mathbf{k}\times\mathbf{q}}{q_\perp^2|\mathbf{k}-\mathbf{q}|^2}\left(\frac{\mathbf{k}\cdot(\mathbf{k}-\mathbf{q})}{|\mathbf{k}\times\mathbf{q}|}+i\right)$$
$$+\frac{i}{\sqrt{\pi}k_\perp}\int\frac{d^2\mathbf{q}}{(2\pi)^2}\frac{d^2\mathbf{p}}{(2\pi)^2}\left[[b_\perp(\mathbf{p}), b_\eta(\mathbf{q}-\mathbf{p})], b_\perp(\mathbf{k}-\mathbf{q})\right]\frac{I_1(\mathbf{p},\mathbf{q},\mathbf{k})}{p_\perp^2|\mathbf{q}-\mathbf{p}|^2|\mathbf{k}-\mathbf{q}|^2} + \frac{i}{\sqrt{\pi}k_\perp}\int\frac{d^2\mathbf{q}}{(2\pi)^2}\frac{d^2\mathbf{p}}{(2\pi)^2}\left[\left[b_\eta(\mathbf{p}), b_\eta(\mathbf{q}-\mathbf{p})\right], b_\eta(\mathbf{k}-\mathbf{q})\right]\frac{I_2(\mathbf{p},\mathbf{q},\mathbf{k})}{p_\perp^2|\mathbf{q}-\mathbf{p}|^2|\mathbf{k}-\mathbf{q}|^2}$$
$$+\frac{i}{\sqrt{\pi}k_\perp}\int\frac{d^2\mathbf{q}}{(2\pi)^2}\frac{d^2\mathbf{p}}{(2\pi)^2}\left[\left[b_\perp(\mathbf{p}), b_\perp(\mathbf{q}-\mathbf{p})\right], b_\eta(\mathbf{k}-\mathbf{q})\right]\frac{I_3(\mathbf{p},\mathbf{q},\mathbf{k})}{p_\perp^2|\mathbf{q}-\mathbf{p}|^2|\mathbf{k}-\mathbf{q}|^2}$$

$$I_1(\mathbf{p},\mathbf{q},\mathbf{k}) = \pi k_\perp(\mathbf{k}\times\mathbf{q})(\mathbf{q}\times\mathbf{p})\int_{-\pi}^{\pi}\frac{d\phi}{2\pi}\frac{\mathbf{q}\cdot(\mathbf{q}-2\mathbf{p})+w_\perp^2}{q_\perp^2-w_\perp^2}\left(\frac{1}{w_\perp}L_{011}(|\mathbf{k}-\mathbf{q}|,w_\perp,k_\perp)-\frac{1}{q_\perp}L_{011}(|\mathbf{k}-\mathbf{q}|,q_\perp,k_\perp)\right)+\frac{1}{4}\pi k_\perp(\mathbf{k}-\mathbf{q})\cdot\mathbf{p}\int_{-\pi}^{\pi}\frac{d\phi}{2\pi}\frac{|\mathbf{q}-\mathbf{p}|^2-p_\perp^2+w_\perp^2}{w_\perp}L_{011}(|\mathbf{k}-\mathbf{q}|,w_\perp,k_\perp)$$

$$I_2(\mathbf{p},\mathbf{q},\mathbf{k}) = \frac{(\mathbf{k}\times\mathbf{q})(\mathbf{q}\times\mathbf{p})}{2q_\perp^2}\int_{-\pi}^{\pi}\frac{d\phi}{2\pi}\frac{p_\perp^2+|\mathbf{q}-\mathbf{p}|^2-w_\perp^2}{q_\perp^2-w_\perp^2}\pi|\mathbf{k}-\mathbf{q}|k_\perp\left(L_{011}(w_\perp,|\mathbf{k}-\mathbf{q}|,k_\perp)-L_{011}(q_\perp,|\mathbf{k}-\mathbf{q}|,k_\perp)\right)$$
$$+\frac{(2\mathbf{k}-\mathbf{q})\cdot\mathbf{q}\mathbf{q}\cdot(\mathbf{q}-2\mathbf{p})}{8q_\perp^2}\int_{-\pi}^{\pi}\frac{d\phi}{2\pi}\frac{1}{w_\perp^2}\left((-q_\perp^2+w_\perp^2+2\mathbf{p}\cdot(\mathbf{q}-\mathbf{p}))\pi|\mathbf{k}-\mathbf{q}|k_\perp\left(L_{011}(w_\perp,|\mathbf{k}-\mathbf{q}|,k_\perp)-L_{011}(0,|\mathbf{k}-\mathbf{q}|,k_\perp)\right)\right.$$

$$I_3(\mathbf{p},\mathbf{q},\mathbf{k}) = \frac{(\mathbf{k}\times\mathbf{q})(\mathbf{q}\times\mathbf{p})}{q_\perp^2}(p_\perp^2+q_\perp^2-\mathbf{p}\cdot\mathbf{q})\int_{-\pi}^{\pi}\frac{d\phi}{2\pi}\frac{1}{q_\perp^2-w_\perp^2}\pi|\mathbf{k}-\mathbf{q}|k_\perp\left(L_{011}(w_\perp,|\mathbf{k}-\mathbf{q}|,k_\perp)-L_{011}(q_\perp,|\mathbf{k}-\mathbf{q}|,k_\perp)\right)$$
$$+\frac{1}{4q_\perp^2}(2\mathbf{k}-\mathbf{q})\cdot\mathbf{q}\mathbf{q}\cdot(\mathbf{q}-2\mathbf{p})\mathbf{p}\cdot(\mathbf{q}-\mathbf{p})\int_{-\pi}^{\pi}\frac{d\phi}{2\pi}\frac{1}{w_\perp^2}\pi|\mathbf{k}-\mathbf{q}|k_\perp\left(L_{011}(w_\perp,|\mathbf{k}-\mathbf{q}|,k_\perp)-L_{011}(0,|\mathbf{k}-\mathbf{q}|,k_\perp)\right)$$

Calculating the First Saturation Correction: bulk terms

$$\boxed{\frac{dN}{d^2\mathbf{k}}\Big|_{g^6} = \frac{1}{(2\pi)^2}\sum_{\gamma=\eta,\perp} |\mathfrak{S}_\gamma^{(3)}(\mathbf{k}) + \mathfrak{B}_\gamma^{(3)}(\mathbf{k})|^2 + \mathfrak{S}_\gamma^{(1)*}(\mathbf{k})\left(\mathfrak{S}_\gamma^{(5)}(\mathbf{k}) + \mathfrak{B}_\gamma^{(5)}(\mathbf{k})\right) + \mathfrak{S}_\gamma^{(1)}(\mathbf{k})\left(\mathfrak{S}_\gamma^{(5)*}(\mathbf{k}) + \mathfrak{B}_\gamma^{(5)*}(\mathbf{k})\right)}$$

<u>Bulk term for transverse polarization</u>

$$\mathfrak{B}_\perp^{(5)}(\mathbf{p}) = -i\sqrt{\frac{\pi}{4}}\int_0^\infty \frac{d\tau}{\tau} H_0^{(2)}(p_\perp\tau) S_\perp^{(5)}(\tau,\mathbf{p})$$

$$\begin{aligned} S_\perp^{(5)}(\tau,\mathbf{k}) = & \frac{i\epsilon^{il}\mathbf{k}_l}{k_\perp}\tau^2 \int \frac{d^2\mathbf{q}}{(2\pi)^2}(\mathbf{k}-2\mathbf{q})_i \left([\tilde{\beta}^{(3)}(\tau,\mathbf{q}), \tilde{\beta}^{(1)}(\tau,\mathbf{k}-\mathbf{q})] + [\beta_j^{(3)}(\tau,\mathbf{q}), \beta_j^{(1)}(\tau,\mathbf{k}-\mathbf{q})]\right) \\ & + \left(-(2\mathbf{k}-\mathbf{q})_j[\beta_j^{(3)}(\tau,\mathbf{q}), \beta_i^{(1)}(\tau,\mathbf{k}-\mathbf{q})] + (\mathbf{k}+\mathbf{q})_j[\beta_i^{(3)}(\tau,\mathbf{q}), \beta_j^{(1)}(\tau,\mathbf{k}-\mathbf{q})]\right) \\ & + \int \frac{d^2\mathbf{q}}{(2\pi)^2}\frac{d^2\mathbf{p}}{(2\pi)^2}\Big([\tilde{\beta}^{(1)}(\tau,\mathbf{k}-\mathbf{q}), [\beta_i^{(1)}(\tau,\mathbf{p}), \tilde{\beta}^{(1)}(\tau,\mathbf{q}-\mathbf{p})]] \\ & \quad + [\beta_j^{(1)}(\tau,\mathbf{k}-\mathbf{q}), [\beta_i^{(1)}(\tau,\mathbf{p}), \beta_j^{(1)}(\tau,\mathbf{q}-\mathbf{p})]]\Big) \end{aligned}$$

Definite integrals of products of three Bessel functions

$$\int_0^\infty d\tau\tau J_1(q_\perp\tau)J_1(|\mathbf{k}-\mathbf{q}|\tau)H_0^{(2)}(k_\perp\tau) = \frac{1}{\pi q_\perp|\mathbf{k}-\mathbf{q}|}\left(\frac{\mathbf{q}\cdot(\mathbf{q}-\mathbf{k})}{|\mathbf{q}\times\mathbf{k}|} - i\right),$$

$$\int_0^\infty d\tau\tau J_1(w_\perp\tau)J_1(|\mathbf{k}-\mathbf{q}|\tau)H_0^{(2)}(k_\perp\tau) = L_{110}(w_\perp, |\mathbf{k}-\mathbf{q}|, k_\perp),$$

$$\int_0^\infty d\tau\tau J_0(w_\perp\tau)J_0(|\mathbf{k}-\mathbf{q}|\tau)H_0^{(2)}(k_\perp\tau) = L_{000}(w_\perp, |\mathbf{k}-\mathbf{q}|, k_\perp).$$

Prudnikov, Brychkov, Marichev "Integrals and Series, Volume 2, Special Functions, (1986)

Results: bulk term for transverse polarization

$$\mathfrak{B}_\perp^{(5)}(\mathbf{k}) = \frac{1}{\sqrt{\pi}k_\perp}\int\frac{d^2\mathbf{q}}{(2\pi)^2}\Big[2\beta^{(3)}(\tau=0,\mathbf{q}), b_\eta(\mathbf{k}-\mathbf{q})\Big]\frac{\mathbf{k}\times\mathbf{q}}{q_\perp^2|\mathbf{k}-\mathbf{q}|^2}\left(\frac{\mathbf{q}\cdot(\mathbf{q}-\mathbf{k})}{|\mathbf{q}\times\mathbf{k}|}-i\right)+\frac{1}{\sqrt{\pi}k_\perp}\int\frac{d^2\mathbf{q}}{(2\pi)^2}\Big[q_\perp\beta_\perp^{(3)}(\tau=0,\mathbf{q}), b_\perp(\mathbf{k}-\mathbf{q})\Big]\frac{(\mathbf{k}\times\mathbf{q})(k_\perp^2+q_\perp^2-\mathbf{k}\cdot\mathbf{q})}{q_\perp^2|\mathbf{k}-\mathbf{q}|^2|\mathbf{k}\times\mathbf{q}|}$$
$$+\frac{i}{\sqrt{\pi}k_\perp}\int\frac{d^2\mathbf{q}}{(2\pi)^2}\frac{d^2\mathbf{p}}{(2\pi)^2}\Big[\Big[b_\perp(\mathbf{p}), b_\eta(\mathbf{q}-\mathbf{p})\Big], b_\eta(\mathbf{k}-\mathbf{q})\Big]\frac{G_1(\mathbf{p},\mathbf{q},\mathbf{k})}{p_\perp^2|\mathbf{q}-\mathbf{p}|^2|\mathbf{k}-\mathbf{q}|^2}+i\frac{1}{\sqrt{\pi}k_\perp}\int\frac{d^2\mathbf{q}}{(2\pi)^2}\frac{d^2\mathbf{p}}{(2\pi)^2}\Big[[b_\eta(\mathbf{p}), b_\eta(\mathbf{q}-\mathbf{p})], b_\perp(\mathbf{k}-\mathbf{q})\Big]\frac{G_2(\mathbf{p},\mathbf{q},\mathbf{k})}{p_\perp^2|\mathbf{q}-\mathbf{p}|^2|\mathbf{k}-\mathbf{q}|^2}$$
$$+i\frac{1}{\sqrt{\pi}k_\perp}\int\frac{d^2\mathbf{q}}{(2\pi)^2}\frac{d^2\mathbf{p}}{(2\pi)^2}\Big[[b_\perp(\mathbf{p}), b_\perp(\mathbf{q}-\mathbf{p})], b_\perp(\mathbf{k}-\mathbf{q})\Big]\frac{G_3(\mathbf{p},\mathbf{q},\mathbf{k})}{p_\perp^2|\mathbf{q}-\mathbf{p}|^2|\mathbf{k}-\mathbf{q}|^2}$$

$$G_1(\mathbf{p},\mathbf{q},\mathbf{k}) = \pi|\mathbf{k}-\mathbf{q}|(\mathbf{k}\times\mathbf{q})(\mathbf{q}\times\mathbf{p})\int_{-\pi}^{\pi}\frac{d\phi}{2\pi}\frac{\mathbf{q}\cdot(\mathbf{q}-2\mathbf{p})+w_\perp^2}{q_\perp^2-w_\perp^2}\left(\frac{1}{w_\perp}L_{110}(w_\perp,|\mathbf{k}-\mathbf{q}|,k_\perp)-\frac{1}{q_\perp}L_{110}(q_\perp,|\mathbf{k}-\mathbf{q}|,k_\perp)\right)+\pi|\mathbf{k}-\mathbf{q}|(\mathbf{p}\cdot\mathbf{k})\int_{-\pi}^{\pi}\frac{d\phi}{2\pi}\frac{|\mathbf{q}-\mathbf{p}|^2-p_\perp^2+w_\perp^2}{4w_\perp}L_{110}(w_\perp,|\mathbf{k}-\mathbf{q}|,k_\perp)$$

$$G_2(\mathbf{p},\mathbf{q},\mathbf{k}) = \frac{1}{q_\perp^2}(k_\perp^2+q_\perp^2-\mathbf{k}\cdot\mathbf{q})(\mathbf{k}\times\mathbf{q})(\mathbf{q}\times\mathbf{p})\frac{\pi}{2}\int_{-\pi}^{\pi}\frac{d\phi}{2\pi}\frac{1}{q_\perp^2-w_\perp^2}(-w_\perp^2+p_\perp^2+|\mathbf{q}-\mathbf{p}|^2)\Big(L_{000}(w_\perp,|\mathbf{k}-\mathbf{q}|,k_\perp)-L_{000}(q_\perp,|\mathbf{k}-\mathbf{q}|,k_\perp)\Big)$$
$$+\frac{1}{4q_\perp^2}(2\mathbf{k}-\mathbf{q})\cdot\mathbf{q}\,\mathbf{k}\cdot(\mathbf{k}-\mathbf{q})\mathbf{q}\cdot(\mathbf{q}-2\mathbf{p})\frac{\pi}{2}\int_{-\pi}^{\pi}\frac{d\phi}{2\pi}\frac{1}{w_\perp^2}(w_\perp^2-q_\perp^2+2\mathbf{p}\cdot(\mathbf{q}-\mathbf{p}))\Big(L_{000}(w_\perp,|\mathbf{k}-\mathbf{q}|,k_\perp-L_{000}(0,|\mathbf{k}-\mathbf{q}|,k_\perp)\Big)$$

$$G_3(\mathbf{p},\mathbf{q},\mathbf{k}) = \frac{\pi}{q_\perp^2}(k_\perp^2+q_\perp^2-\mathbf{k}\cdot\mathbf{q})(\mathbf{k}\times\mathbf{q})(\mathbf{q}\times\mathbf{p})(-\mathbf{p}\cdot\mathbf{q}+p_\perp^2+q_\perp^2)\int_{-\pi}^{\pi}\frac{d\phi}{2\pi}\frac{1}{q_\perp^2-w_\perp^2}\Big(L_{000}(w_\perp,|\mathbf{k}-\mathbf{q}|,k_\perp)-L_{000}(q_\perp,|\mathbf{k}-\mathbf{q}|,k_\perp)\Big)$$
$$+\frac{\pi}{4q_\perp^2}(2\mathbf{k}-\mathbf{q})\cdot\mathbf{q}\,\mathbf{k}\cdot(\mathbf{k}-\mathbf{q})\mathbf{q}\cdot(\mathbf{q}-2\mathbf{p})\mathbf{p}\cdot(\mathbf{q}-\mathbf{p})\int_{-\pi}^{\pi}\frac{d\phi}{2\pi}\frac{1}{w_\perp^2}\Big(L_{000}(w_\perp,|\mathbf{k}-\mathbf{q}|,k_\perp-L_{000}(0,|\mathbf{k}-\mathbf{q}|,k_\perp)\Big)$$
$$-\frac{1}{2}(\mathbf{k}\times\mathbf{q})(\mathbf{q}\times\mathbf{p})\frac{\pi}{2}\int_{-\pi}^{\pi}\frac{d\phi}{2\pi}L_{000}(w_\perp,|\mathbf{k}-\mathbf{q}|,k_\perp)\,.$$

Results: First Saturation Correction from Crossing Terms

$$\frac{dN}{d^2\mathbf{k}}\bigg|_{g^6} = \frac{1}{(2\pi)^2}\sum_{\gamma=\eta,\perp}|\mathfrak{S}_\gamma^{(3)}(\mathbf{k})+\mathfrak{B}_\gamma^{(3)}(\mathbf{k})|^2 + \underline{\mathfrak{S}_\gamma^{(1)*}(\mathbf{k})\left(\mathfrak{S}_\gamma^{(5)}(\mathbf{k})+\mathfrak{B}_\gamma^{(5)}(\mathbf{k})\right)} + \mathfrak{S}_\gamma^{(1)}(\mathbf{k})\left(\mathfrak{S}_\gamma^{(5)*}(\mathbf{k})+\mathfrak{B}_\gamma^{(5)*}(\mathbf{k})\right)$$

1.

$$\int \frac{d^2\mathbf{p}}{(2\pi)^2}\frac{d^2\mathbf{q}}{(2\pi)^2}\frac{d^2\mathbf{p}_1}{(2\pi)^2}\frac{d^2\mathbf{p}_4}{(2\pi)^2}\mathcal{F}_1(\mathbf{p},\mathbf{q},\mathbf{p}_1,\mathbf{p}_4,\mathbf{k})\, f^{dab_3}f^{ab_1b_2}\rho_P^{b_1}(\mathbf{p}_1)\rho_P^{b_2}(\mathbf{p}-\mathbf{p}_1)\rho_P^{b_3}(\mathbf{q}-\mathbf{p})\rho_P^{b_4}(\mathbf{p}_4)$$
$$\times U^{de}(\mathbf{k}-\mathbf{q})U^{b_4e}(-\mathbf{k}-\mathbf{p}_4)$$

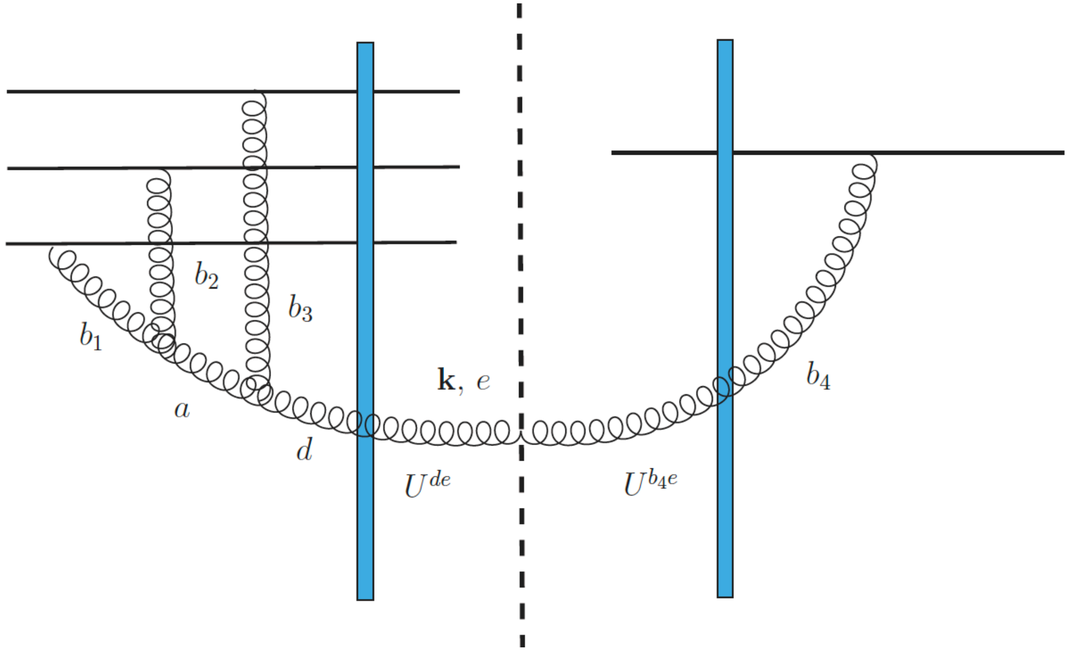

$$\mathcal{F}_1(\mathbf{p},\mathbf{q},\mathbf{p}_1,\mathbf{p}_4,\mathbf{k}) = \frac{1}{2\pi k_\perp^2}\frac{(p_4^2\mathbf{k}+k_\perp^2\mathbf{p}_4)\times\mathbf{q}}{q_\perp^2 p_1^2 p_4^2|\mathbf{q}-\mathbf{p}|^2}\left(\frac{-(\mathbf{p}\times\mathbf{q})}{p_\perp^2}+\frac{(\mathbf{p}-\mathbf{p}_1)\times\mathbf{q}}{3|\mathbf{p}-\mathbf{p}_1|^2}\right)$$

Order-g^5 Amplitude **Order-g Complex Conjugate Amplitude**

Results: First Saturation Correction from Crossing Terms

$$\frac{dN}{d^2\mathbf{k}}\Big|_{g^6} = \frac{1}{(2\pi)^2}\sum_{\gamma=\eta,\perp}|\mathfrak{S}_\gamma^{(3)}(\mathbf{k})+\mathfrak{B}_\gamma^{(3)}(\mathbf{k})|^2 + \underline{\mathfrak{S}_\gamma^{(1)*}(\mathbf{k})\left(\mathfrak{S}_\gamma^{(5)}(\mathbf{k})+\mathfrak{B}_\gamma^{(5)}(\mathbf{k})\right)} + \mathfrak{S}_\gamma^{(1)}(\mathbf{k})\left(\mathfrak{S}_\gamma^{(5)*}(\mathbf{k})+\mathfrak{B}_\gamma^{(5)*}(\mathbf{k})\right)$$

2. $$\int \frac{d^2\mathbf{p}}{(2\pi)^2}\frac{d^2\mathbf{q}}{(2\pi)^2}\frac{d^2\mathbf{p}_2}{(2\pi)^2}\frac{d^2\mathbf{p}_3}{(2\pi)^2}\frac{d^2\mathbf{p}_4}{(2\pi)^2}\mathcal{F}_2(\mathbf{p},\mathbf{q},\mathbf{p}_2,\mathbf{p}_3,\mathbf{p}_4,\mathbf{k})\, f^{bb_1b_2}f^{ade}\rho_P^{b_1}(\mathbf{p}-\mathbf{p}_2)\rho_P^{b_2}(\mathbf{p}_2)\rho_P^{b_3}(\mathbf{p}_3)\rho_P^{b_4}(\mathbf{p}_4)$$
$$\times\, U^{ba}(\mathbf{q}-\mathbf{p})U^{b_3d}(\mathbf{k}-\mathbf{q}-\mathbf{p}_3)U^{b_4e}(-\mathbf{k}-\mathbf{p}_4)$$

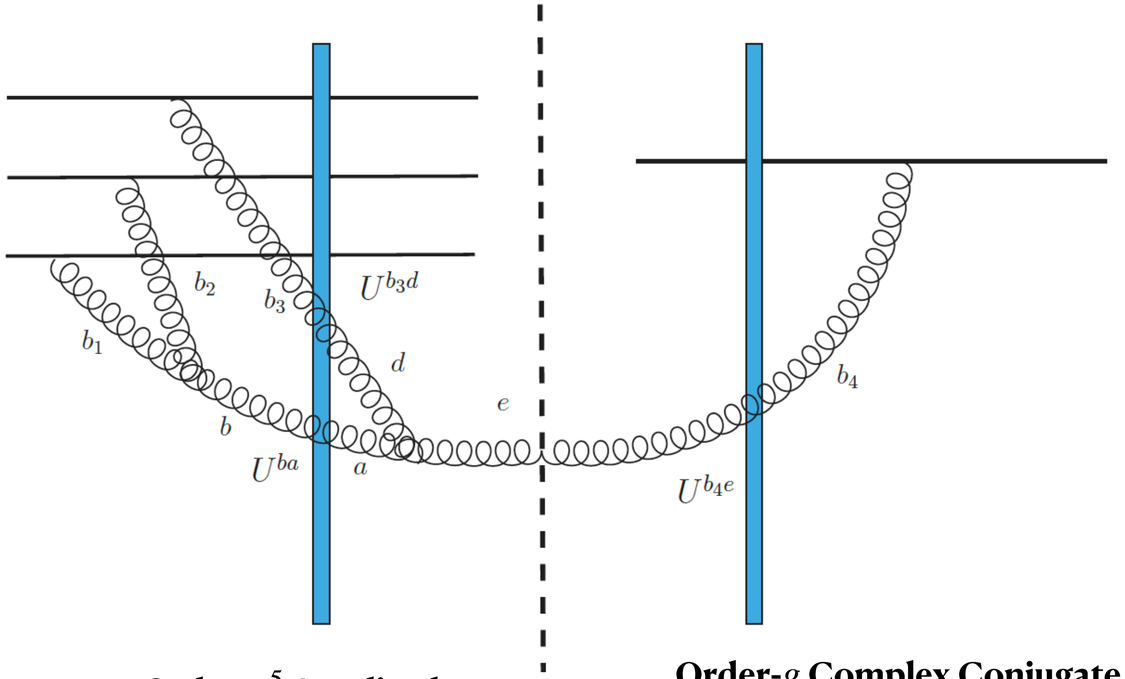

$$\mathcal{F}_2(\mathbf{p},\mathbf{q},\mathbf{p}_2,\mathbf{p}_3,\mathbf{p}_4,\mathbf{k}) = -\frac{1}{2\pi k_\perp^2}\frac{(\mathbf{q}\times\mathbf{p})(\mathbf{p}_2\times\mathbf{p})}{p_\perp^2|\mathbf{p}-\mathbf{p}_2|^2p_2^2}\frac{(\mathbf{k}-\mathbf{q})\cdot\mathbf{p}_3}{|\mathbf{k}-\mathbf{q}|^2p_3^2}\frac{(\mathbf{k}+\mathbf{p}_4)\cdot\mathbf{p}_4}{p_4^2} + 7 \text{ additional terms}$$

Order-g^5 Amplitude **Order-g Complex Conjugate Amplitude**

Results: First Saturation Correction from Crossing Terms

$$\frac{dN}{d^2\mathbf{k}}\bigg|_{g^6} = \frac{1}{(2\pi)^2}\sum_{\gamma=\eta,\perp} |\mathfrak{S}_\gamma^{(3)}(\mathbf{k}) + \mathfrak{B}_\gamma^{(3)}(\mathbf{k})|^2 + \underline{\mathfrak{S}_\gamma^{(1)*}(\mathbf{k})\left(\mathfrak{S}_\gamma^{(5)}(\mathbf{k}) + \mathfrak{B}_\gamma^{(5)}(\mathbf{k})\right)} + \mathfrak{S}_\gamma^{(1)}(\mathbf{k})\left(\mathfrak{S}_\gamma^{(5)*}(\mathbf{k}) + \mathfrak{B}_\gamma^{(5)*}(\mathbf{k})\right)$$

3.

$$\int \frac{d^2\mathbf{p}}{(2\pi)^2}\frac{d^2\mathbf{q}}{(2\pi)^2}\frac{d^2\mathbf{p}_1}{(2\pi)^2}\frac{d^2\mathbf{p}_2}{(2\pi)^2}\frac{d^2\mathbf{p}_3}{(2\pi)^2}\frac{d^2\mathbf{p}_4}{(2\pi)^2}\,\mathcal{F}_3(\mathbf{p},\mathbf{q},\mathbf{p}_1,\mathbf{p}_2,\mathbf{p}_3,\mathbf{p}_4,\mathbf{k})\, f^{abc}f^{ade}\rho_P^{b_1}(\mathbf{p}_1)\rho_P^{b_2}(\mathbf{p}_2)\rho_P^{b_3}(\mathbf{p}_3)\rho_P^{b_4}(\mathbf{p}_4)$$
$$\times\, U^{b_1 b}(\mathbf{p}-\mathbf{p}_1)U^{b_2 c}(\mathbf{q}-\mathbf{p}-\mathbf{p}_2)U^{b_3 d}(\mathbf{k}-\mathbf{q}-\mathbf{p}_3)U^{b_4 e}(-\mathbf{k}-\mathbf{p}_4)$$

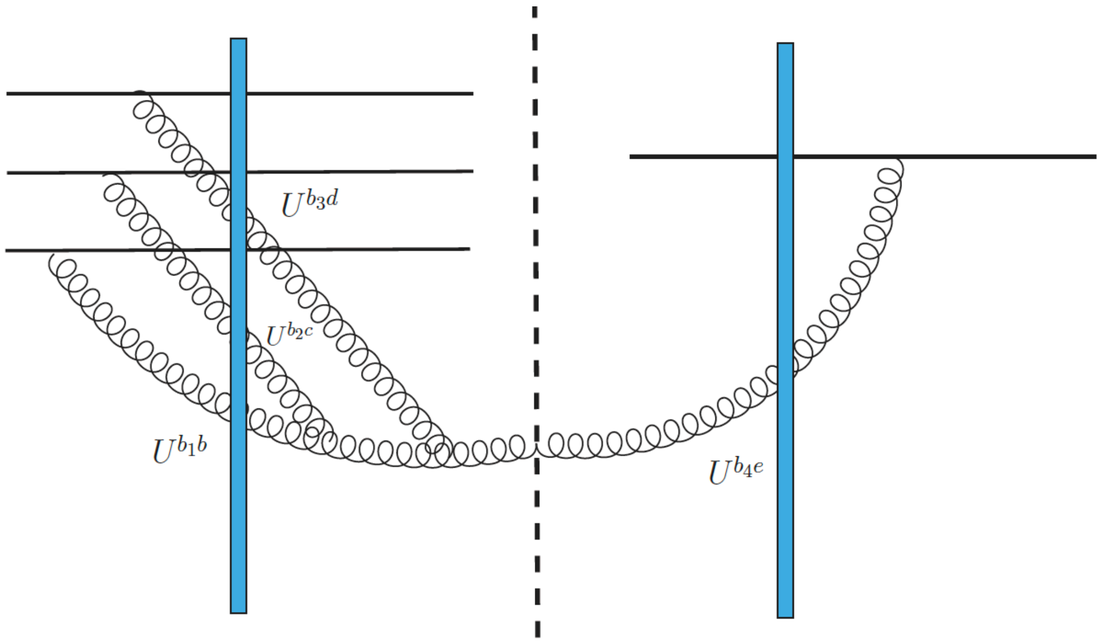

$$\mathcal{F}_3(\mathbf{p},\mathbf{q},\mathbf{p}_1,\mathbf{p}_2,\mathbf{p}_3,\mathbf{p}_4,\mathbf{k})$$
$$= \frac{i}{\pi k_\perp^2}\frac{\mathbf{p}\times\mathbf{p}_1}{p_1^2}\frac{(\mathbf{q}-\mathbf{p}-\mathbf{p}_2)\cdot\mathbf{p}_2}{p_2^2}\frac{(\mathbf{k}-\mathbf{q})\times\mathbf{p}_3}{p_3^2}\frac{(\mathbf{k}+\mathbf{p}_4)\cdot\mathbf{p}_4}{p_4^2}\frac{\mathcal{I}_1(\mathbf{p},\mathbf{q},\mathbf{k})}{p_\perp^2|\mathbf{q}-\mathbf{p}|^2|\mathbf{k}-\mathbf{q}|^2}$$
$$-\frac{1}{\pi k_\perp^2}\frac{\mathbf{q}\times\mathbf{p}}{q_\perp^2 p_\perp^2}\frac{\mathbf{p}\times\mathbf{p}_1}{p_1^2}\frac{(\mathbf{q}-\mathbf{p})\cdot\mathbf{p}_2}{|\mathbf{q}-\mathbf{p}|^2 p_2^2}\frac{(\mathbf{k}-\mathbf{q}-\mathbf{p}_3)\cdot\mathbf{p}_3}{p_3^2}\frac{(\mathbf{k}+\mathbf{p}_4)\cdot\mathbf{p}_4}{p_4^2}$$
$$+\,17 \text{ additional terms}$$

Order-g^5 Amplitude **Order-g Complex Conjugate Amplitude**

Event Averaging

$$\frac{dN}{d^2\mathbf{k}}\Big|_{g^6} = \frac{1}{(2\pi)^2}\sum_{\gamma=\eta,\perp} |\mathfrak{S}_\gamma^{(3)}(\mathbf{k}) + \mathfrak{B}_\gamma^{(3)}(\mathbf{k})|^2 + \mathfrak{S}_\gamma^{(1)*}(\mathbf{k})\left(\mathfrak{S}_\gamma^{(5)}(\mathbf{k}) + \mathfrak{B}_\gamma^{(5)}(\mathbf{k})\right) + \mathfrak{S}_\gamma^{(1)}(\mathbf{k})\left(\mathfrak{S}_\gamma^{(5)*}(\mathbf{k}) + \mathfrak{B}_\gamma^{(5)*}(\mathbf{k})\right)$$

$$\left\langle \frac{dN}{d^2\mathbf{k}}\Big|_{g^6}(\rho_P,\rho_T)\right\rangle_{\rho_P,\rho_T} = \quad ?$$

McLerran-Venugopalan Model $\langle \rho^a_{P(T)}(\mathbf{p})\rho^b_{P(T)}(\mathbf{q})\rangle = \delta^{ab}\mu^2_{P(T)}(\mathbf{p}+\mathbf{q})$

$$f^{dab_3}f^{ab_1b_2}\left\langle \rho_P^{b_1}(\mathbf{p}_1)\rho_P^{b_2}(\mathbf{p}-\mathbf{p}_1)\rho_P^{b_3}(\mathbf{q}-\mathbf{p})\rho_P^{b_4}(\mathbf{p}_4)\right\rangle\left\langle U^{de}(\mathbf{k}-\mathbf{q})U^{b_4e}(-\mathbf{k}-\mathbf{p}_4)\right\rangle$$

$$f^{bb_1b_2}f^{ade}\left\langle \rho_P^{b_1}(\mathbf{p}-\mathbf{p}_2)\rho_P^{b_2}(\mathbf{p}_2)\rho_P^{b_3}(\mathbf{p}_3)\rho_P^{b_4}(\mathbf{p}_4)\right\rangle\left\langle U^{ba}(\mathbf{q}-\mathbf{p})U^{b_3d}(\mathbf{k}-\mathbf{q}-\mathbf{p}_3)U^{b_4e}(-\mathbf{k}-\mathbf{p}_4)\right\rangle$$

$$f^{abc}f^{ade}\left\langle \rho_P^{b_1}(\mathbf{p}_1)\rho_P^{b_2}(\mathbf{p}_2)\rho_P^{b_3}(\mathbf{p}_3)\rho_P^{b_4}(\mathbf{p}_4)\right\rangle\left\langle U^{b_1b}(\mathbf{p}-\mathbf{p}_1)U^{b_2c}(\mathbf{q}-\mathbf{p}-\mathbf{p}_2)U^{b_3d}(\mathbf{k}-\mathbf{q}-\mathbf{p}_3)U^{b_4e}(-\mathbf{k}-\mathbf{p}_4)\right\rangle$$

1. Semi-analytically: various approximation schemes for calculating Wilson line correlators

2. Numerically: more reasonable to compute production amplitudes and recycle these calculations.

Summary and Outlooks

- Next to leading order (order-g^3) solutions of the classical Yang-Mills equations in the dilute-dense regime are obtained.
- Calculations of the first saturation correction to single inclusive soft gluon productions are completed by computing order-g^5 production amplitude.
- Numerical and phenomenological studies of the single and double inclusive gluon productions, particularly the extraction of flow harmonics, will be future work.
- First saturation corrections to other interesting physical quantities like energy-momentum tensor $T^{\mu\nu}$ and their correlations $\langle T^{\mu\nu}(\tau, \mathbf{x}) T^{\alpha\beta}(\tau', \mathbf{y}) \rangle$ can also be computed using the order-g^3 and order-g^5 solutions.
- The order-g^5 solutions can be readily obtained using the same procedure.

Backup Results: First Saturation Correction from order-g^3 production amplitude squared

$$\frac{dN}{d^2\mathbf{k}}\bigg|_{g^6} = \frac{1}{(2\pi)^2}\sum_{\gamma=\eta,\perp} |\mathfrak{S}_\gamma^{(3)}(\mathbf{k}) + \mathfrak{B}_\gamma^{(3)}(\mathbf{k})|^2 + \mathfrak{S}_\gamma^{(1)*}(\mathbf{k})\left(\mathfrak{S}_\gamma^{(5)}(\mathbf{k}) + \mathfrak{B}_\gamma^{(5)}(\mathbf{k})\right) + \mathfrak{S}_\gamma^{(1)}(\mathbf{k})\left(\mathfrak{S}_\gamma^{(5)*}(\mathbf{k}) + \mathfrak{B}_\gamma^{(5)*}(\mathbf{k})\right)$$

1.

$$\int \frac{d^2\mathbf{p}}{(2\pi)^2}\frac{d^2\mathbf{q}}{(2\pi)^2}\frac{d^2\mathbf{p}_2}{(2\pi)^2}\frac{d^2\mathbf{p}_4}{(2\pi)^2}\mathcal{H}_1(\mathbf{p},\mathbf{q},\mathbf{p}_2,\mathbf{p}_4,\mathbf{k}) f^{ab_1b_2} f^{cb_3b_4}\rho_P^{b_1}(\mathbf{p}-\mathbf{p}_2)\rho_P^{b_2}(\mathbf{p}_2)\rho_P^{b_3}(\mathbf{q}-\mathbf{p}_4)\rho_P^{b_4}(\mathbf{p}_4)$$
$$\times U^{ae}(\mathbf{k}-\mathbf{p})U^{ce}(-\mathbf{k}-\mathbf{q})$$

$$\mathcal{H}_1(\mathbf{p},\mathbf{q},\mathbf{p}_2,\mathbf{p}_4,\mathbf{k}) = -\frac{1}{4\pi}\frac{(\mathbf{p}_4\times\mathbf{q})\left(p_\perp^2(\mathbf{p}_2\times\mathbf{q}) - (\mathbf{p}\cdot\mathbf{p}_2)(\mathbf{p}\times\mathbf{q})\right)}{p_\perp^2 q_\perp^2|\mathbf{p}-\mathbf{p}_2|^2 p_2^2|\mathbf{q}-\mathbf{p}_4|^2 p_4^2}$$

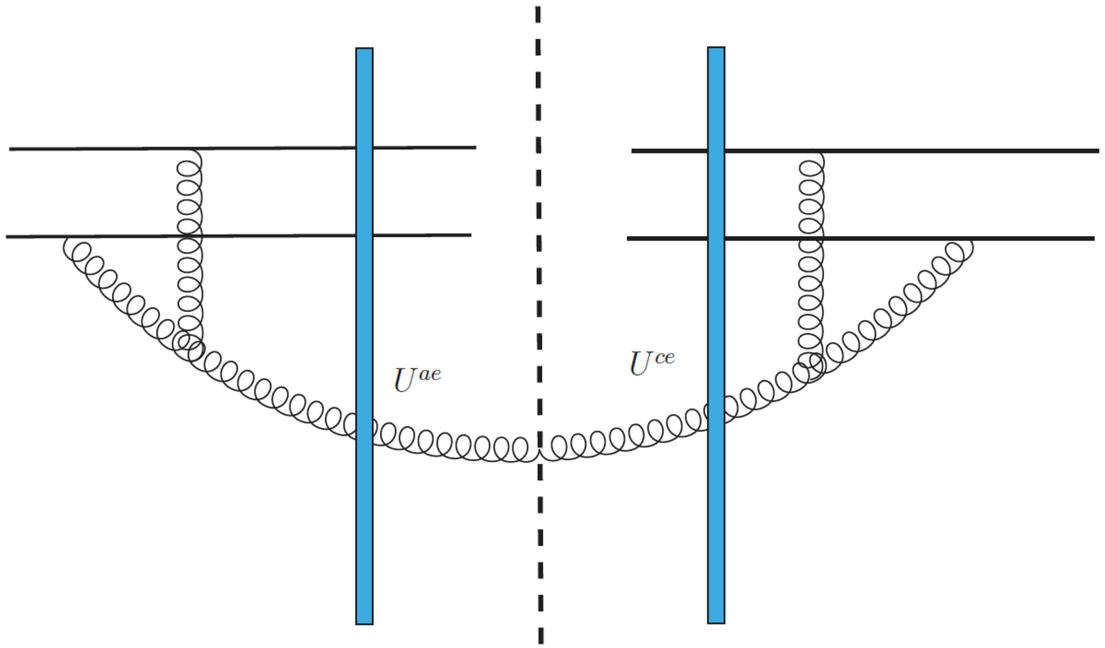

Order-g^3 Amplitude **Order-g^3 Complex Conjugate Amplitude**

Backup Results: First Saturation Correction from order-g^3 production amplitude squared

$$\frac{dN}{d^2\mathbf{k}}\bigg|_{g^6} = \frac{1}{(2\pi)^2}\sum_{\gamma=\eta,\perp} \underline{|\mathfrak{S}_\gamma^{(3)}(\mathbf{k}) + \mathfrak{B}_\gamma^{(3)}(\mathbf{k})|^2} + \mathfrak{S}_\gamma^{(1)*}(\mathbf{k})\left(\mathfrak{S}_\gamma^{(5)}(\mathbf{k}) + \mathfrak{B}_\gamma^{(5)}(\mathbf{k})\right) + \mathfrak{S}_\gamma^{(1)}(\mathbf{k})\left(\mathfrak{S}_\gamma^{(5)*}(\mathbf{k}) + \mathfrak{B}_\gamma^{(5)*}(\mathbf{k})\right)$$

2. $$\int \frac{d^2\mathbf{p}}{(2\pi)^2}\frac{d^2\mathbf{q}}{(2\pi)^2}\frac{d^2\mathbf{p}_2}{(2\pi)^2}\frac{d^2\mathbf{p}_3}{(2\pi)^2}\frac{d^2\mathbf{p}_4}{(2\pi)^2}\mathcal{H}_2(\mathbf{p},\mathbf{q},\mathbf{p}_2,\mathbf{p}_3,\mathbf{p}_4,\mathbf{k}) f^{cb_1b_2} f^{ade}\rho_P^{b_1}(\mathbf{p}-\mathbf{p}_2)\rho_P^{b_2}(\mathbf{p}_2)\rho_P^{b_3}(\mathbf{p}_3)\rho_P^{b_4}(\mathbf{p}_4)$$
$$\times U^{b_3d}(\mathbf{k}-\mathbf{q}-\mathbf{p}_3)U^{b_4e}(\mathbf{q}-\mathbf{p}_4)U^{ca}(-\mathbf{k}-\mathbf{p})$$

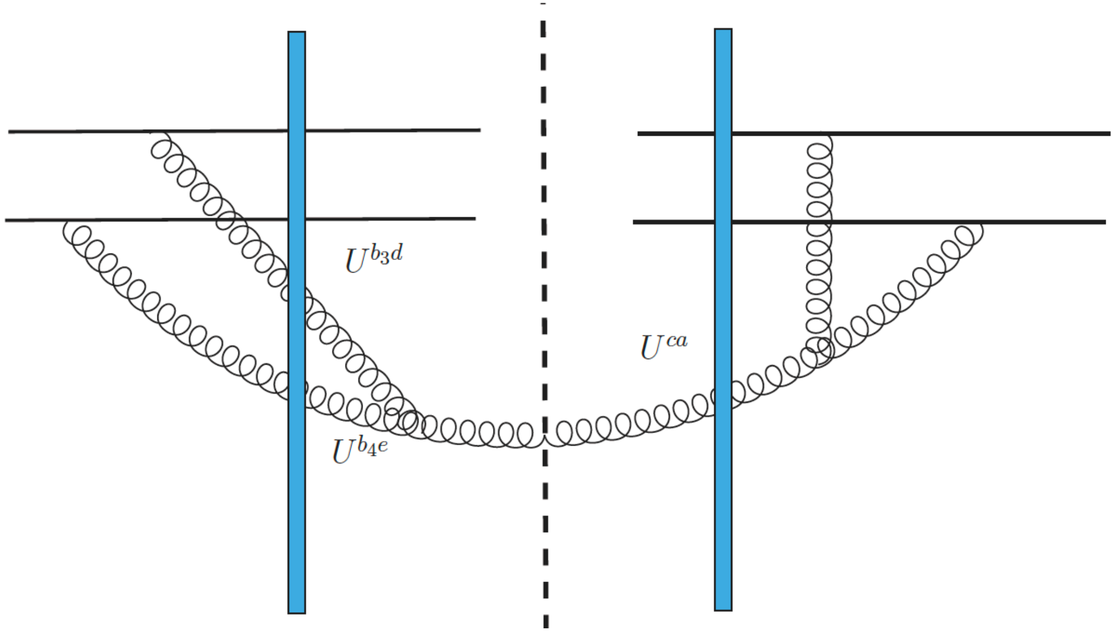

$$\mathcal{H}_2(\mathbf{p},\mathbf{q},\mathbf{p}_2,\mathbf{p}_3,\mathbf{p}_4,\mathbf{k}) = \frac{1}{2\pi k_\perp^2}\frac{(\mathbf{k}\times\mathbf{p})(\mathbf{p}_2\times\mathbf{p})}{p_\perp^2|\mathbf{p}-\mathbf{p}_2|^2p_2^2}\frac{(\mathbf{k}-\mathbf{q})\cdot\mathbf{p}_3}{|\mathbf{k}-\mathbf{q}|^2p_3^2}\frac{(\mathbf{q}-\mathbf{p}_4)\cdot\mathbf{p}_4}{p_4^2} + 5 \text{ additional terms}$$

Order-g^3 Amplitude **Order-g^3 Complex Conjugate Amplitude**

Backup Results: First Saturation Correction from order-g^3 production amplitude squared

$$\frac{dN}{d^2\mathbf{k}}\bigg|_{g^6} = \frac{1}{(2\pi)^2}\sum_{\gamma=\eta,\perp} \underline{|\mathfrak{S}_\gamma^{(3)}(\mathbf{k}) + \mathfrak{B}_\gamma^{(3)}(\mathbf{k})|^2} + \mathfrak{S}_\gamma^{(1)*}(\mathbf{k})\left(\mathfrak{S}_\gamma^{(5)}(\mathbf{k}) + \mathfrak{B}_\gamma^{(5)}(\mathbf{k})\right) + \mathfrak{S}_\gamma^{(1)}(\mathbf{k})\left(\mathfrak{S}_\gamma^{(5)*}(\mathbf{k}) + \mathfrak{B}_\gamma^{(5)*}(\mathbf{k})\right)$$

3. $$\int \frac{d^2\mathbf{p}}{(2\pi)^2}\frac{d^2\mathbf{q}}{(2\pi)^2}\frac{d^2\mathbf{p}_1}{(2\pi)^2}\frac{d^2\mathbf{p}_2}{(2\pi)^2}\frac{d^2\mathbf{p}_3}{(2\pi)^2}\frac{d^2\mathbf{p}_4}{(2\pi)^2}\mathcal{H}_3(\mathbf{p},\mathbf{q},\mathbf{p}_1,\mathbf{p}_2,\mathbf{p}_3,\mathbf{p}_4,\mathbf{k}) f^{abc}f^{ade}\rho_P^{b_1}(\mathbf{p}_1)\rho_P^{b_2}(\mathbf{p}_2)\rho_P^{b_3}(\mathbf{p}_3)\rho_P^{b_4}(\mathbf{p}_4)$$
$$\times U^{b_1 b}(\mathbf{k}-\mathbf{p}-\mathbf{p}_1)U^{b_2 c}(\mathbf{p}-\mathbf{p}_2)U^{b_3 d}(-\mathbf{k}-\mathbf{q}-\mathbf{p}_3)U^{b_4 e}(\mathbf{q}-\mathbf{p}_4)$$

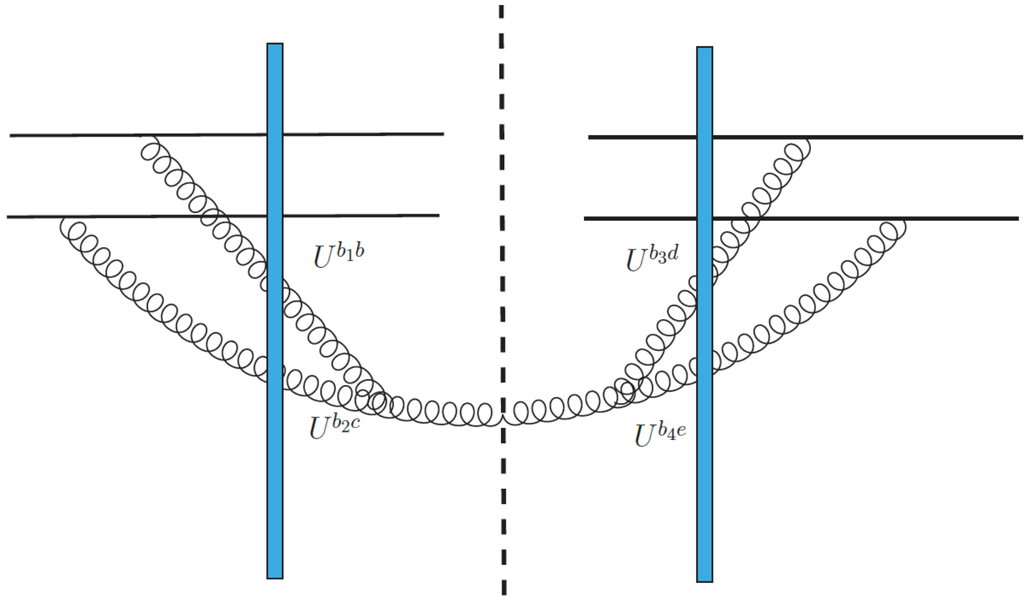

$$\mathcal{H}_3(\mathbf{p},\mathbf{q},\mathbf{p}_1,\mathbf{p}_2,\mathbf{p}_3,\mathbf{p}_4,\mathbf{k}) = -\frac{1}{2\pi k_\perp^2}\frac{(\mathbf{k}-\mathbf{p})\cdot\mathbf{p}_1}{|\mathbf{k}-\mathbf{p}|^2 p_1^2}\frac{(\mathbf{p}-\mathbf{p}_2)\cdot\mathbf{p}_2}{p_2^2}\frac{(\mathbf{k}+\mathbf{q})\cdot\mathbf{p}_3}{|\mathbf{k}+\mathbf{q}|^2 p_3^2}\frac{(\mathbf{q}-\mathbf{p}_4)\cdot\mathbf{p}_4}{p_4^2}$$
$$+ 12 \text{ additional terms}$$

Order-g^3 Amplitude **Order-g^3 Complex Conjugate Amplitude**