Search for heavy diboson resonances in semi-leptonic final states in *pp* collisions at $\sqrt{s}$ = 13 TeV with the ATLAS detector

Zhongyukun Xu, Shandong University
On behalf of the ATLAS Collaboration

Introduction

Several new physics models predict diboson resonances, such as the two Higgs doublet models (2HDM), the Extended Gauge Model (EGM), Extra Dimensions, and Technicolor models.

The search is performed in the 'semi-leptonic' final states, where one of the boson pair is required to decay leptonically and the other hadronically. Three analysis channels based on the number of leptons in the final state are employed (0/1/2-lepton). Each lepton channel is split into one merged (a large-R jet $V \to J$) and one resolved (two small-R jets $V \to jj$) category, except for the 0-lepton channel(only the merged analysis).

This poster presents a new result of searching for the diboson resonance semi-leptonic decay with data collected by the ATLAS experiment at the LHC from 2015 - 2018, corresponding to an integrated luminosity of 139 fb^{-1} in the pp collisions at $\sqrt{s}$ = 13 TeV.

Reference: ATLAS-HDBS-2018-10(https://atlas.web.cern.ch/Atlas/GROUPS/PHYSICS/PAPERS/HDBS-2018-10/)

Analysis Update

Compared with previous publication with 36.1 fb^{-1} (*JHEP03(2018)042* & *JHEP03(2018)009*), several improvements are implemented in this analysis:

- Track-CaloCluster* jet introduced for large-R jet
- Recurrent neutral network(RNN) based ggF/VBF categorization
- New multi-jet estimation based on template method
- Full run II 139 fb^{-1} data recorded

*Large-R jet reconstruction algorithm using both track and calorimeter information, ref: ATL-PHYS-PUB-2017-015

Analysis Details

Object Definition:

Object	Definition
Electrons&Muon	$p_T > 30(7) GeV$ and $\|\eta\| < 2.47$
	Track isolation requirement
Small-R Jets	Anti-kt R = 0.4 , $\|\eta\| < 2.5(\|\eta\| < 4.5)$, $p_T > 30 GeV$, JVT medium
Large-R jets	Anti-kt R = 1.0 TrackCaloCluster jet
	$p_T > 200 GeV$, $mass > 50 GeV$, $\|\eta\| < 2.0$
b-tagged jets	85% efficiency, Multi-variable algorithm (MV2c10)
MET	negative vectorial sum of selected objects

Event Selection:

- 0/1/2 tight(loose) lepton & veto extra-lepton event
- RNN ggF/VBF Categorization
- Hadronically decaying V (J/jj)
  - Jet kinematics selection: pT ratio w.r.t mVV
  - Jet topologic selection: relative angle w.r.t MET & lepton
- SR/CR definition (mass window or extra b-tagged jets)

Track-CaloCluster jet: New track&calorimeter based jet reconstruction algorithm provide better jet substructure resolution to W/Z tagger optimization w.r.t to Calo-only one.

ggF/VBF Categorization: We train a RNN to discriminate the VBF signals and the ggF signal events using HVT signal and heavy Higgs signal. It evaluates the non-V-decay jets within event. RNN score > 0.8 is chosen to keep background rejection efficiency in VBF channel.
20% or higher significance improvement are seen w.r.t cut-based.

Multijet Estimation: For 1-lepton MJ contribution,A template method derives the shapes of the MET distributions of the multijet contributions from multijet-enriched orthogonal control regions (MJCR) which are used in the fit on MET distribution in the target SR/CRs.
Multi-jets contribution is estimated to be 5% in the 1-lepton channel background.

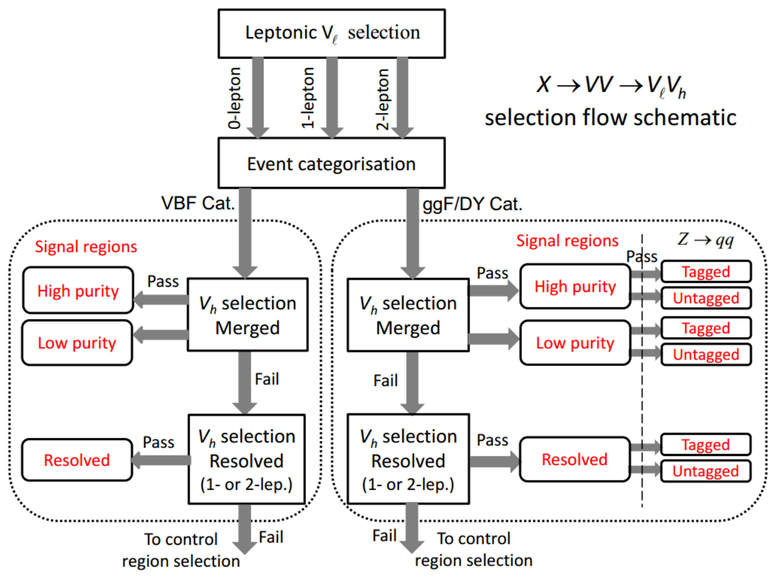

$X \to VV \to V_\ell V_h$ selection flow schematic

Fitting

Fitting Procedure: Fits to the M_{VV} distribution to measure the signal strength with different signal models
- 21 SRs and 21 one-bin CRs

Background Model:
- Top-quarks, W/Z+jets (MC with CRs)
- Diboson MC samples (MC)
- Multi-jets (data-driven)

Systematics:

$m(G_{KK})$ = 600 GeV		$m(G_{KK})$ = 2 TeV	
Uncertainty source	$\Delta\mu/\mu$ [%]	Uncertainty source	$\Delta\mu/\mu$ [%]
Total	32	Total	39
Statistical	19	Statistical	33
Systematic	26	Systematic	21
MC statistics	13	Large-R jet	16
Large-R jet	12	MC statistics	7.0
Background normalisations	11	Small-R jet	3.3
W/Z+jets modelling	9.8	$t\bar{t}$ modelling	3.3
Small-R jet	8.0	Flavour tagging	3.0
Diboson modelling	6.3	W/Z+jets modelling	2.2
$t\bar{t}$ modelling	4.3	Background normalisations	2.1

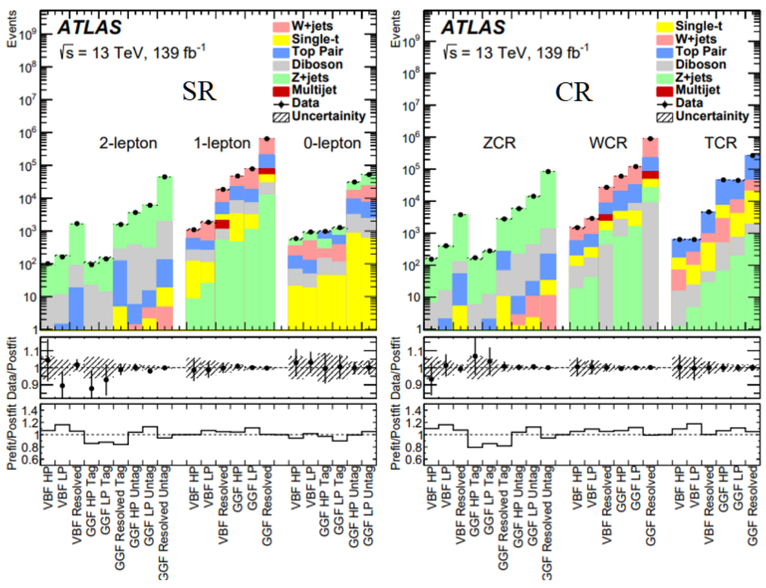

Results

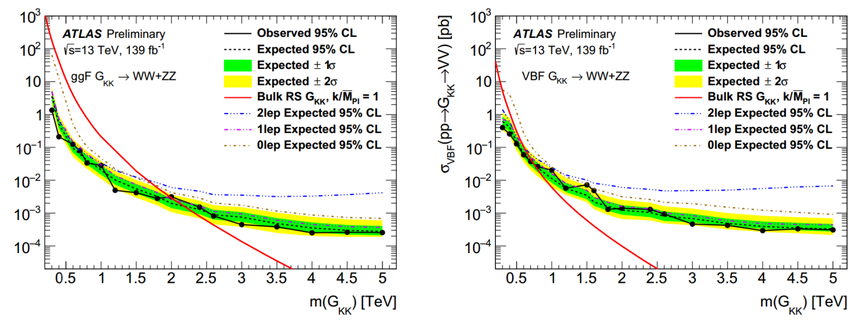

Production process	RS radion	HVT	W'	Z'	RS graviton
ggF/DY	3.2 (2.9)	Model A	3.9 (3.8)	3.5 (3.4)	2.0 (2.2)
		Model B	4.3 (4.0)	3.9 (3.7)	
VBF	–	Model C	–	–	0.76 (0.77)

M_{VV} Spectra example