Characterization of background noise in muography using the Muon Telescope (MuTe)

J. Peña-Rodríguez, L. A. Nuñez
and the MuTe Collaboration

School of Physics, Universidad Industrial de Santander
Colombia
29-07-2020

ICHEP 2020 | PRAGUE
40th INTERNATIONAL CONFERENCE ON HIGH ENERGY PHYSICS

Universidad Industrial de Santander

Muography

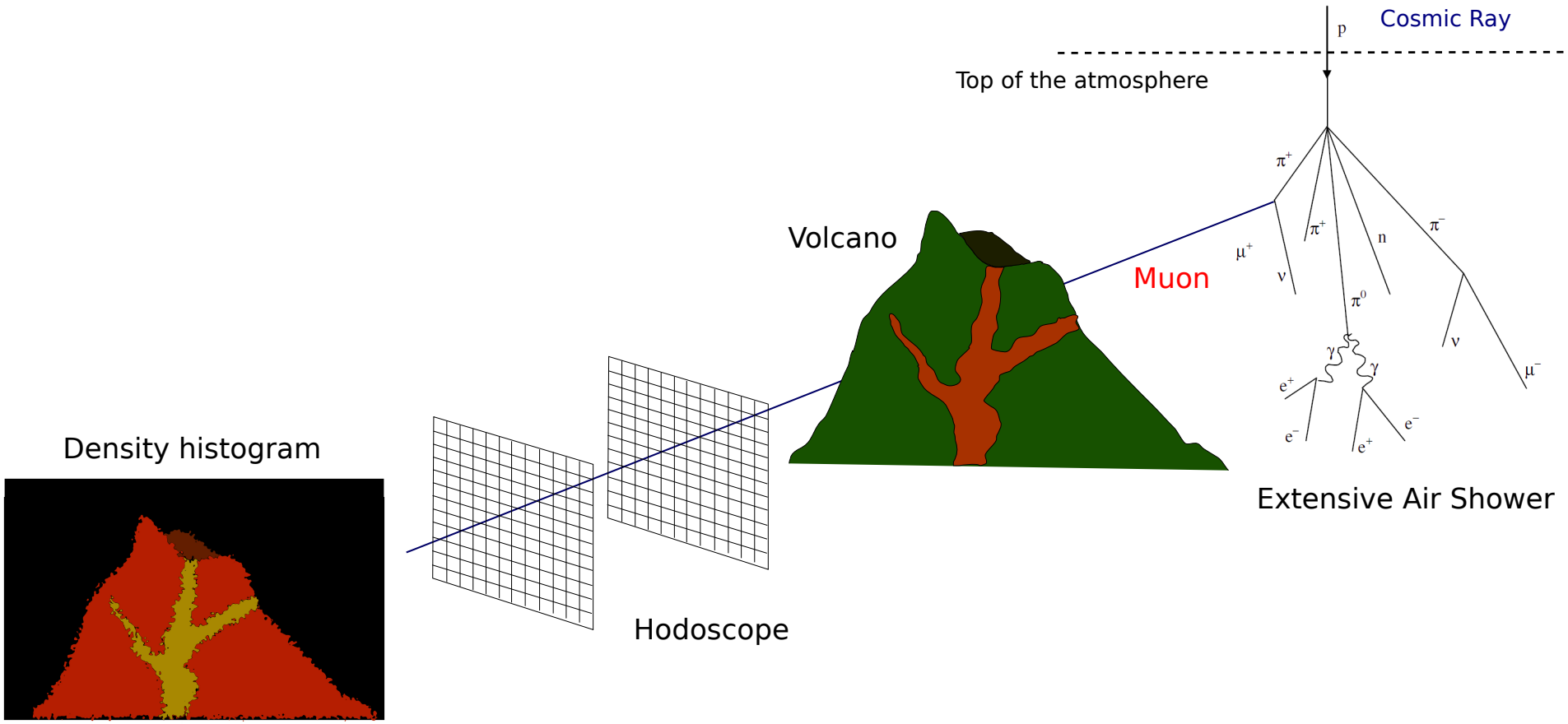
Cosmic Ray
p
Top of the atmosphere
Volcano
Muon
Density histogram
Hodoscope
Extensive Air Shower

Lambert-Beer law

$$\Phi = \Phi_0 e^{-\int_L \mu dx}$$

Transmittance

$$T = \frac{\Phi}{\Phi_0}$$

Opacity (Lesparre 2010)

$$\varrho = \int_L \rho dx \rightarrow \varrho = -\frac{1}{\kappa} \ln T \; [gcm^{-2}]$$

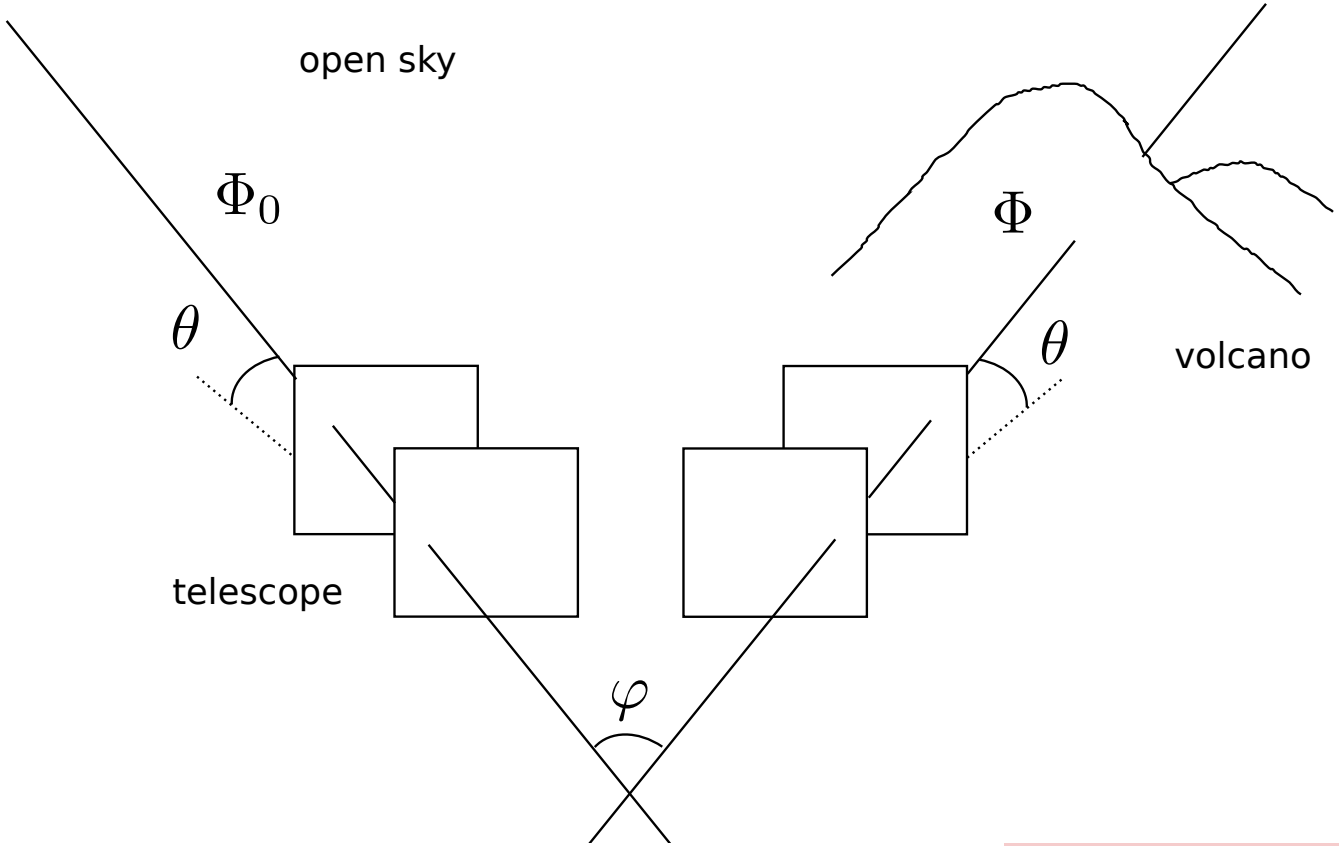

Volcanoes in Colombia

27 volcanos

Cerro Machin Volcano

Background in muography

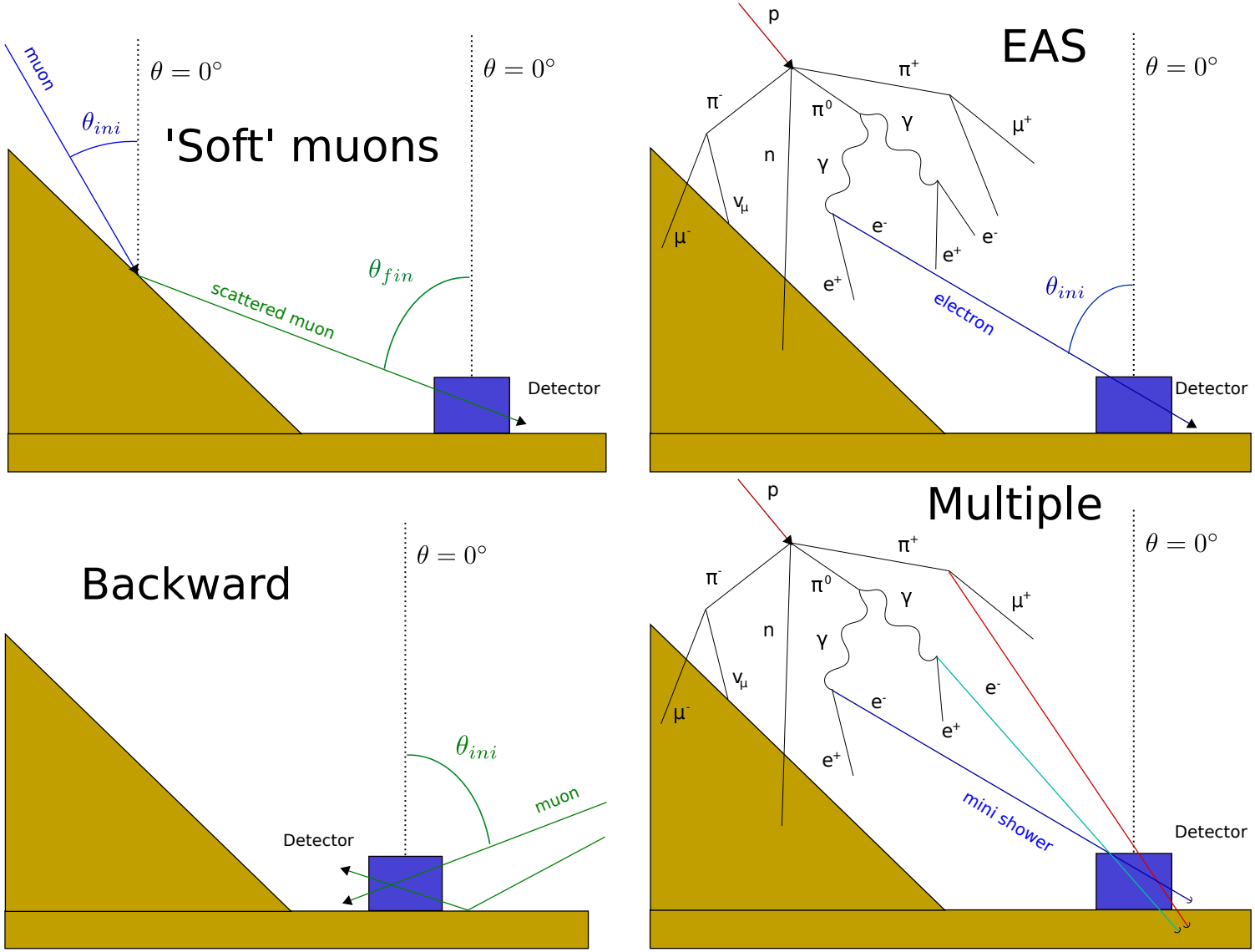

Background rejection methods

low energy particles

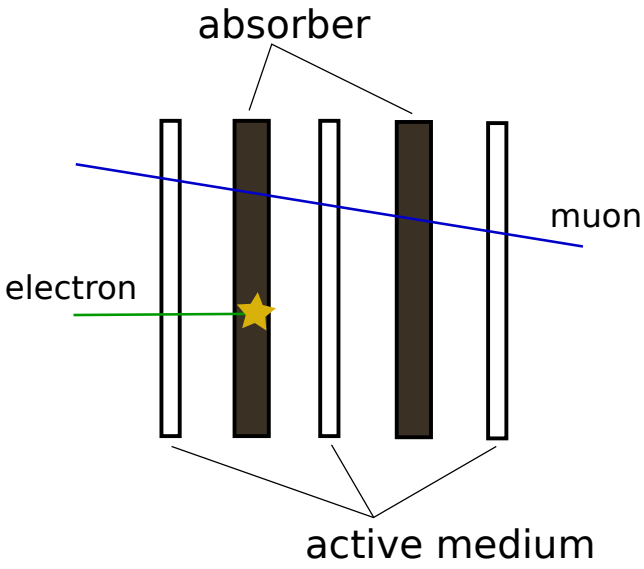

combinatorial

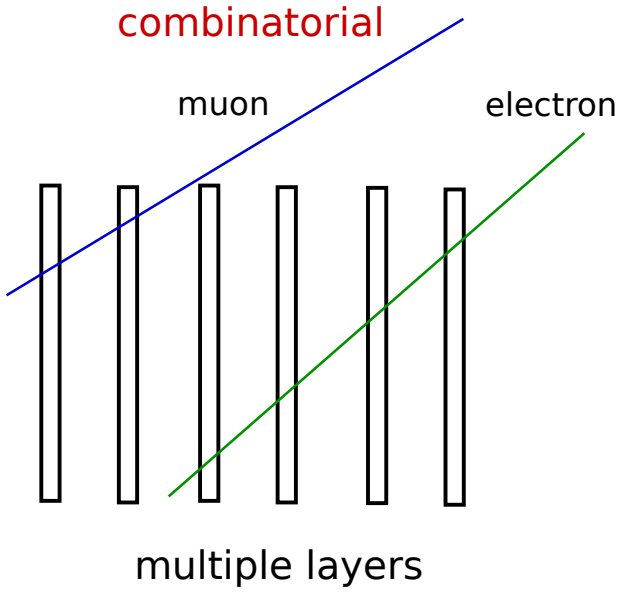

backward scattered

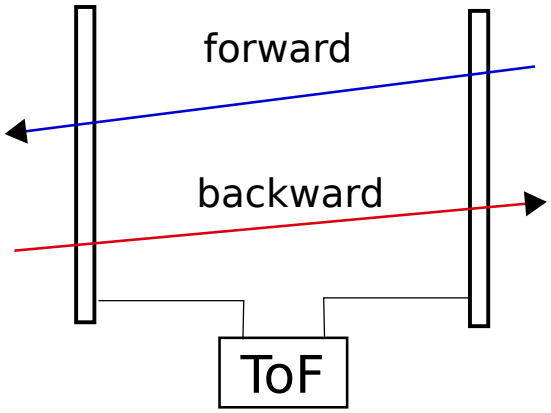

Let's use

Particle Identification Techniques

Detection concept of MuTe

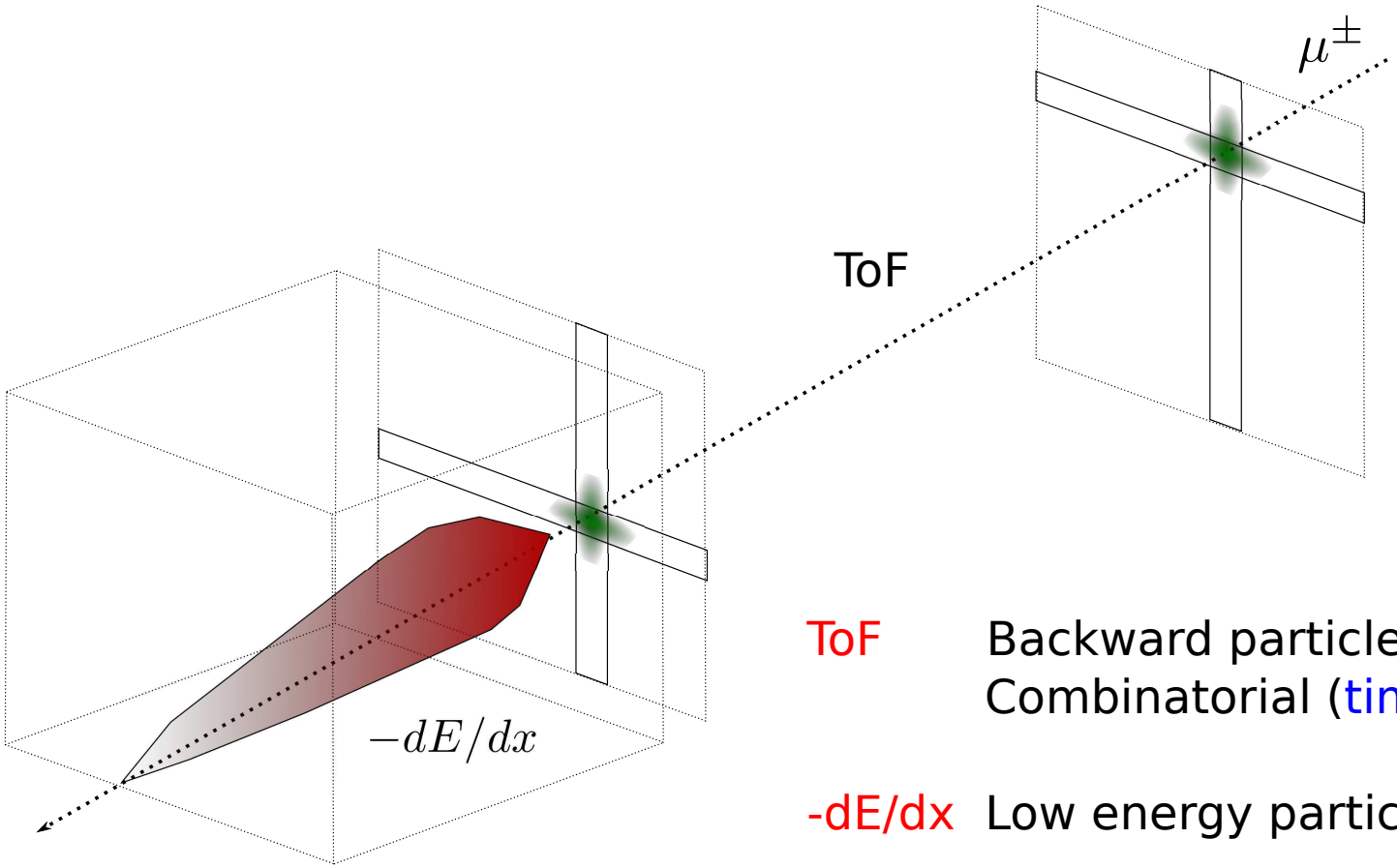

ToF	Backward particles (direction) Combinatorial (timing)
-dE/dx	Low energy particles
-dE/dx + ToF + tracking	Scattered muons (momentum)

The Muon Telescope (MuTe)

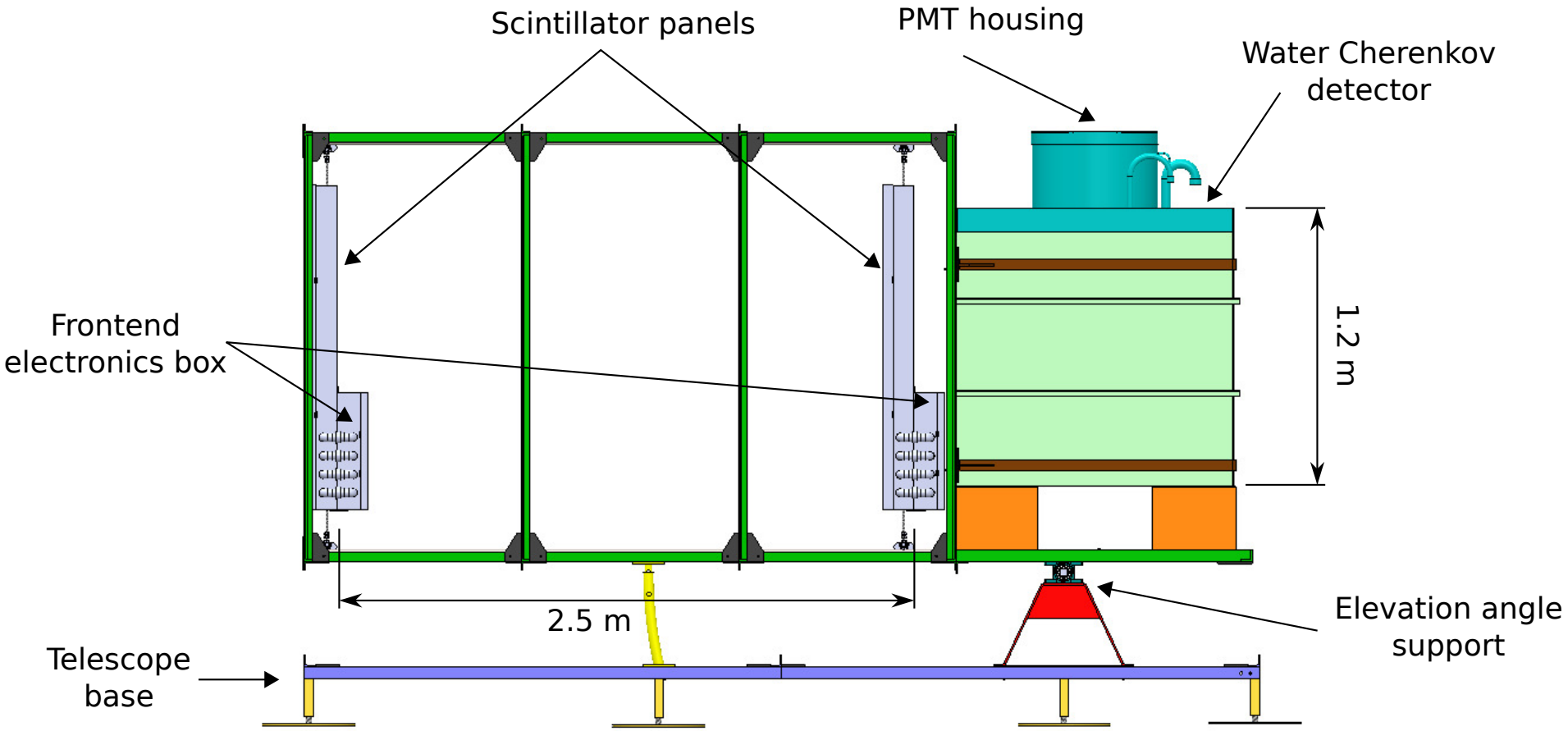

MuTe Collaboration. https://arxiv.org/abs/2004.09364 **2020**

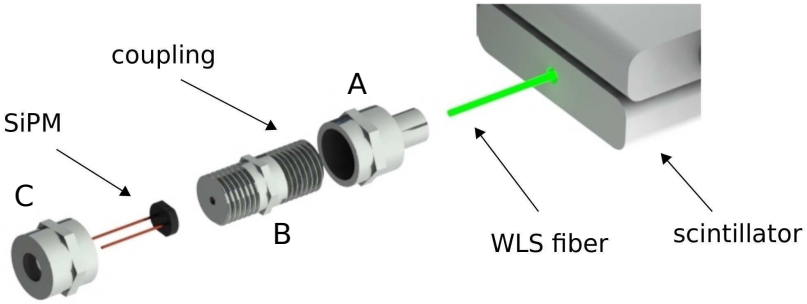

Scintillation bar 120 x 4 x 1 cm³
SiPM 13360-6050CS
Fiber Saint-Gobain BCF-92

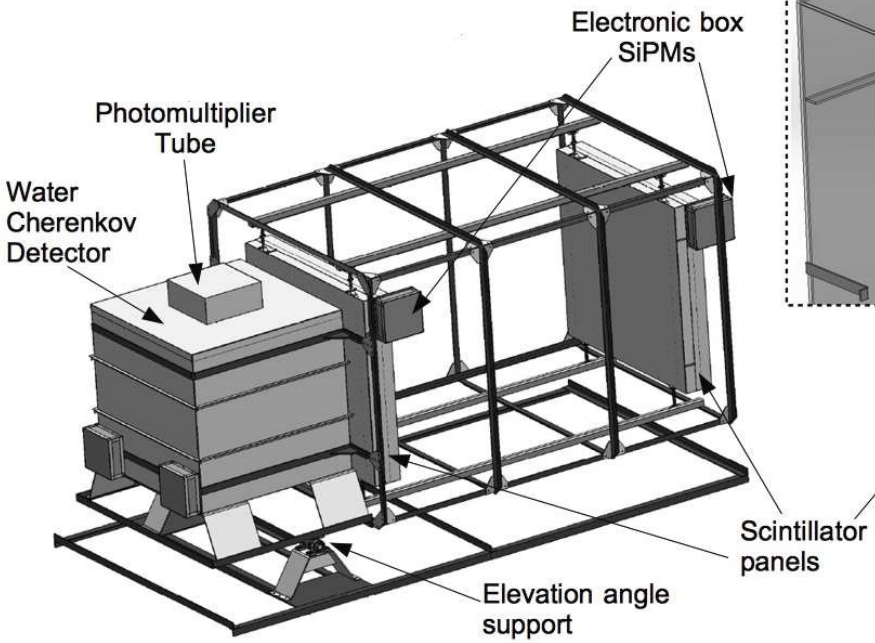

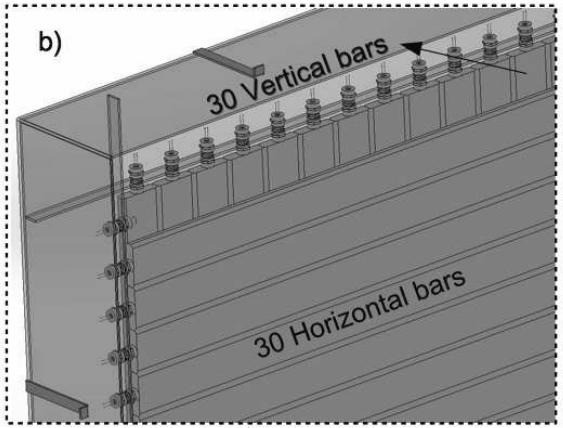

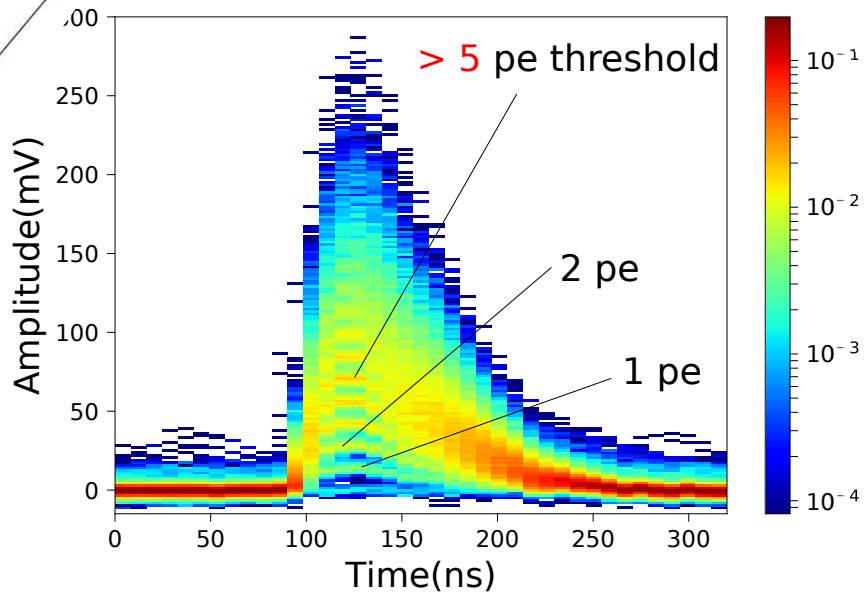

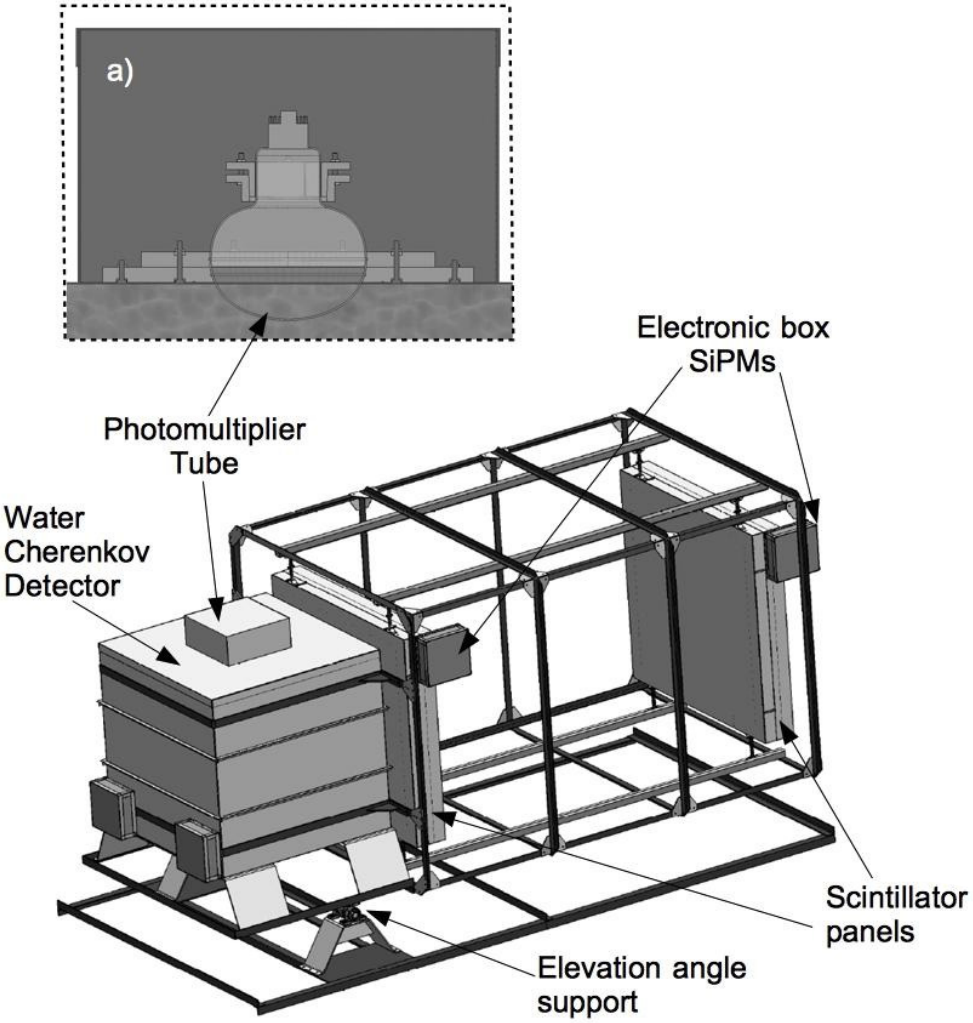

8-in PMT R5912
1.72 m³ WCD
VEM ~240 MeV

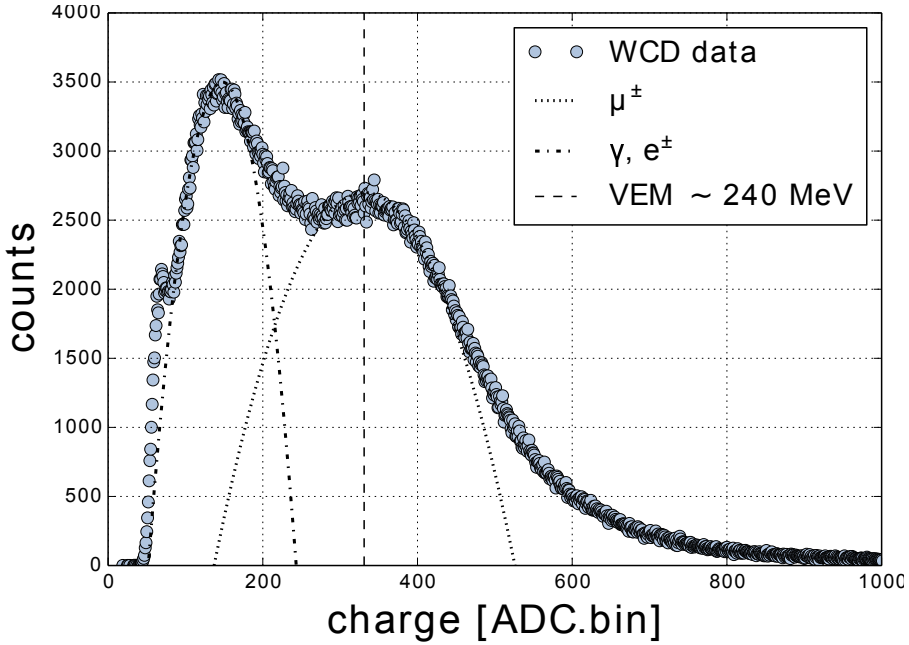

Cosmic ray background characterization

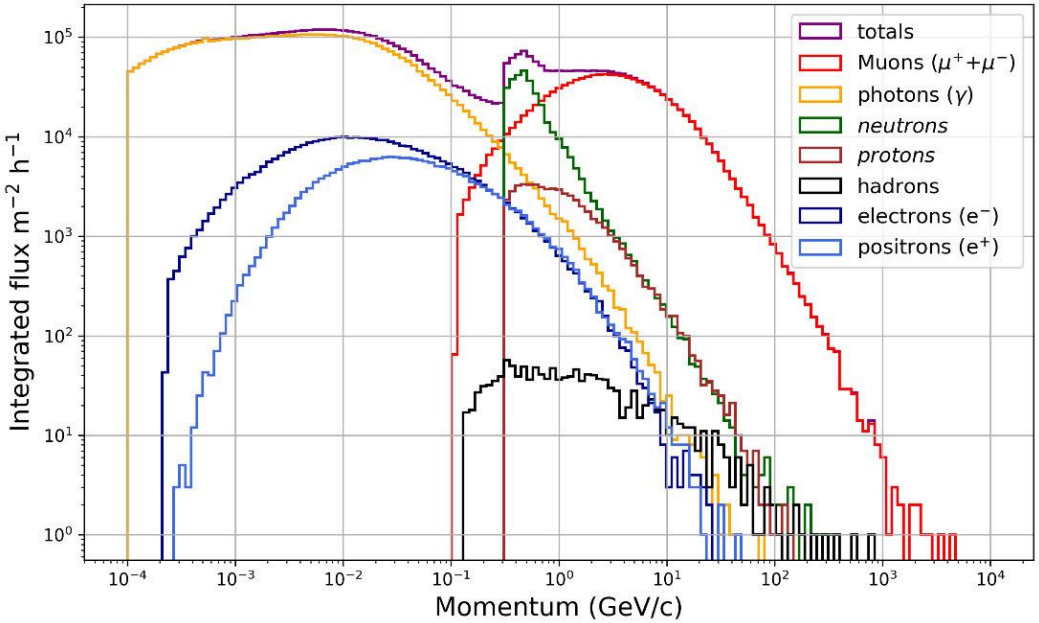

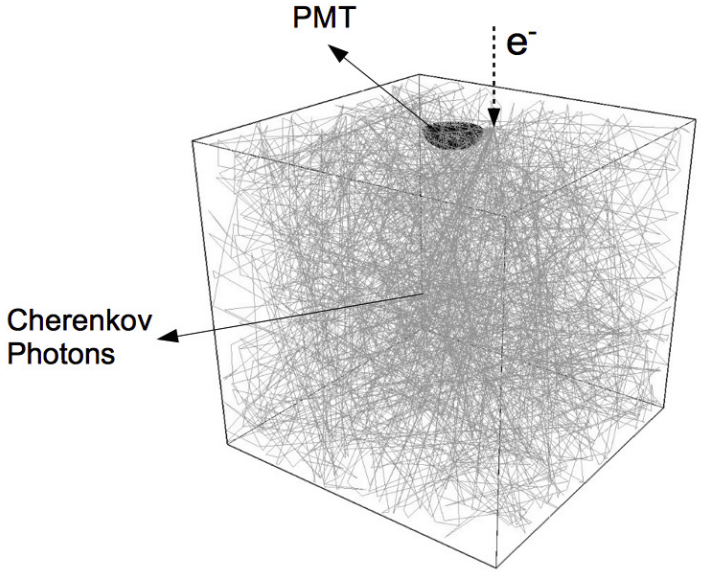

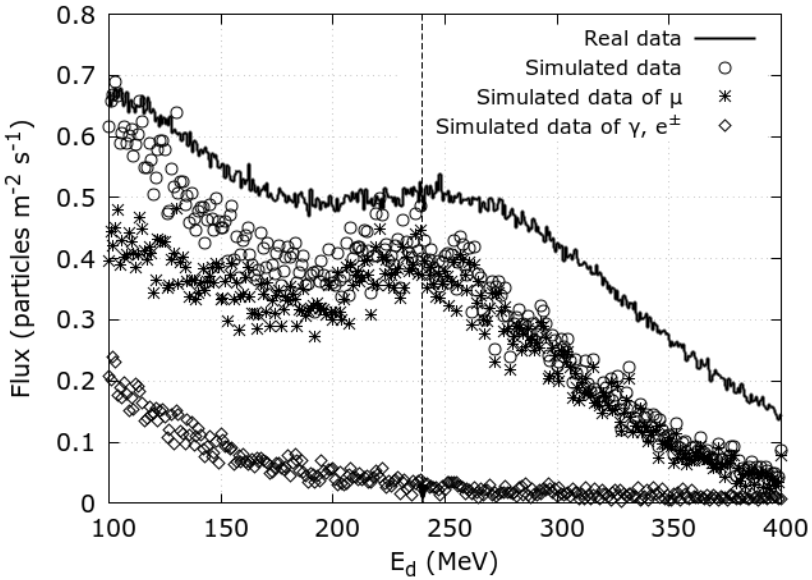

Triggering modes

Single panel

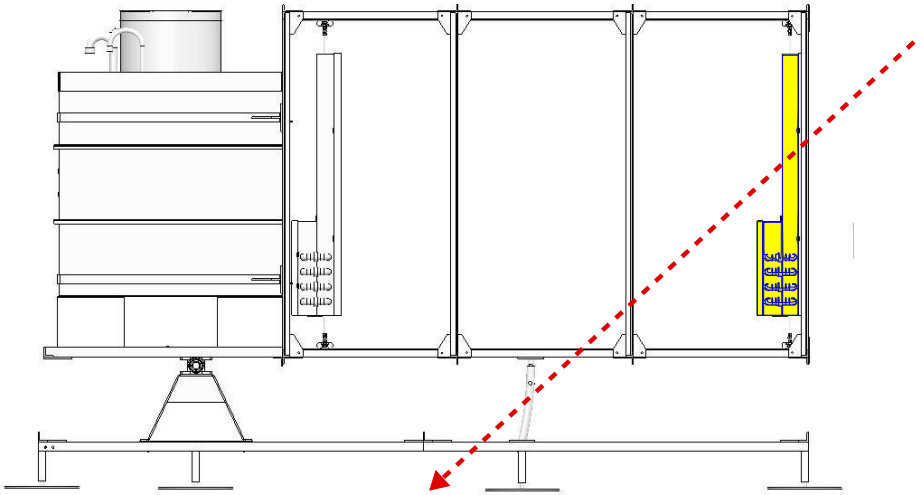

Hodoscope coincidence

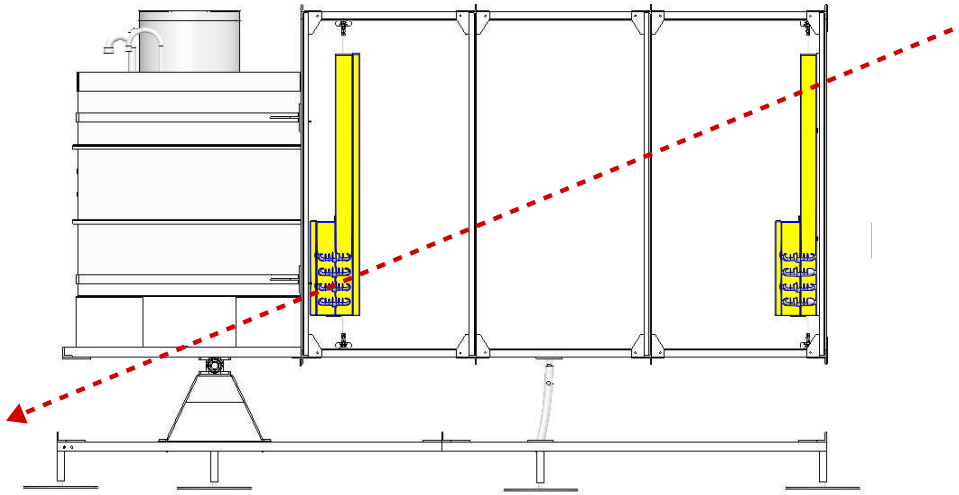

Total coincidence

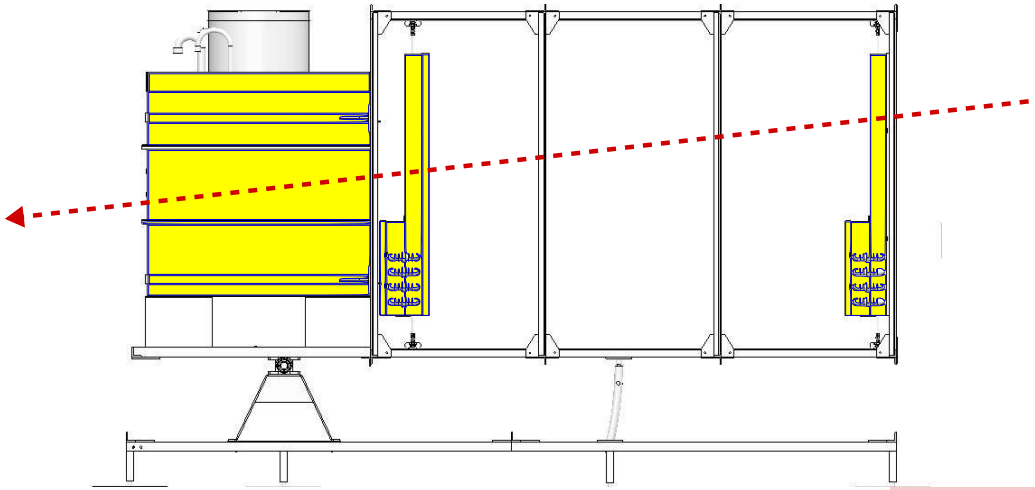

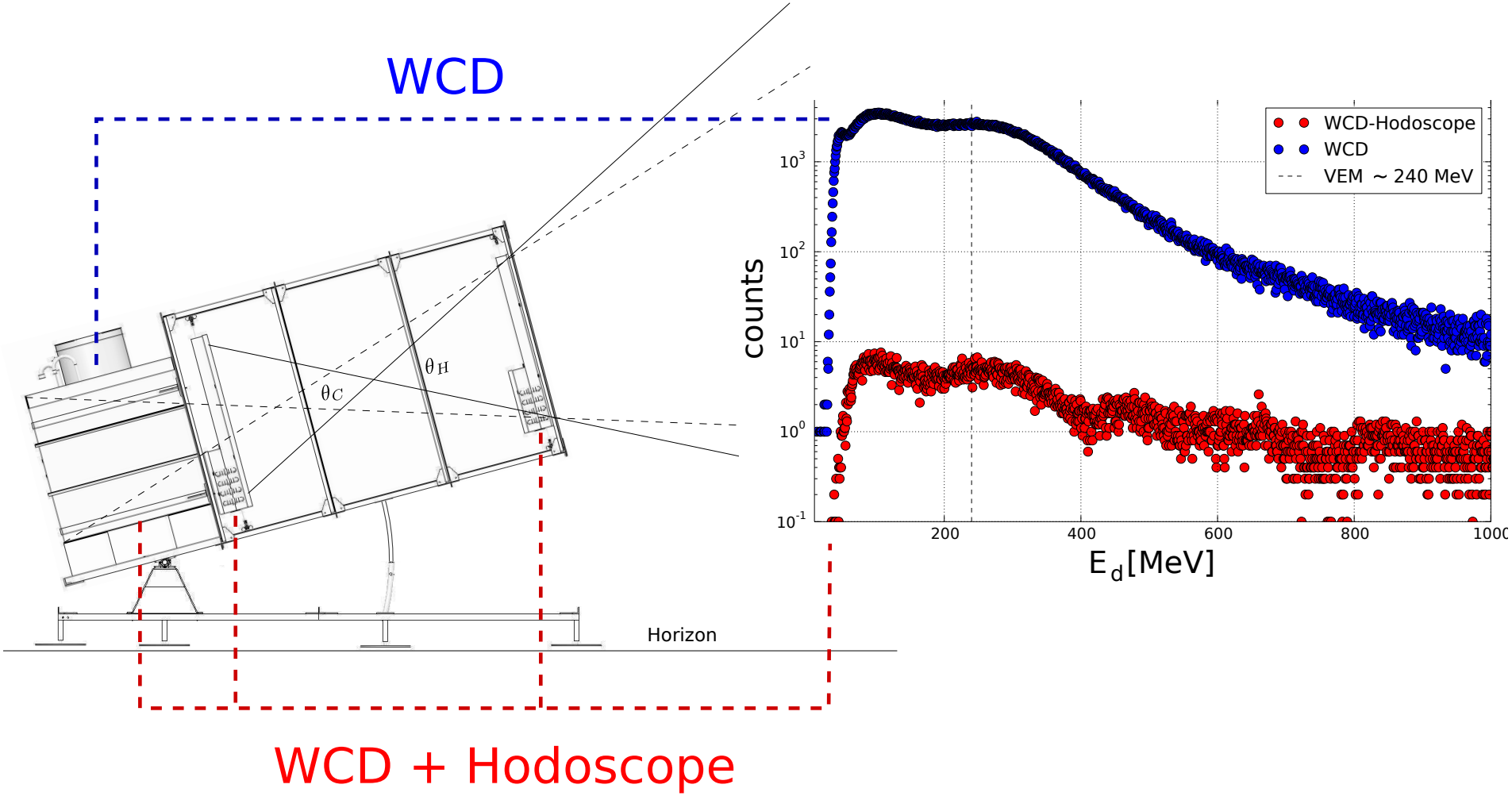
WCD
θ_H
θ_C
Horizon
WCD + Hodoscope
WCD-Hodoscope
WCD
VEM ~ 240 MeV
counts
E_d[MeV]
10^{-1}
10^0
10^1
10^2
10^3
200
400
600
800
1000

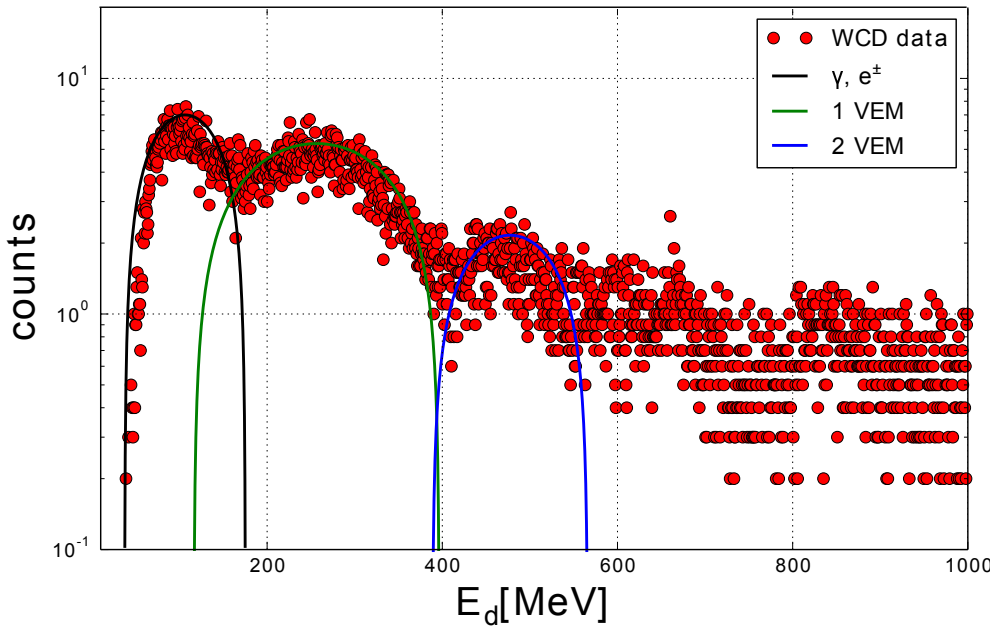

Correlated muons

$\Delta t \sim 300ns$

same Extensive Air Shower

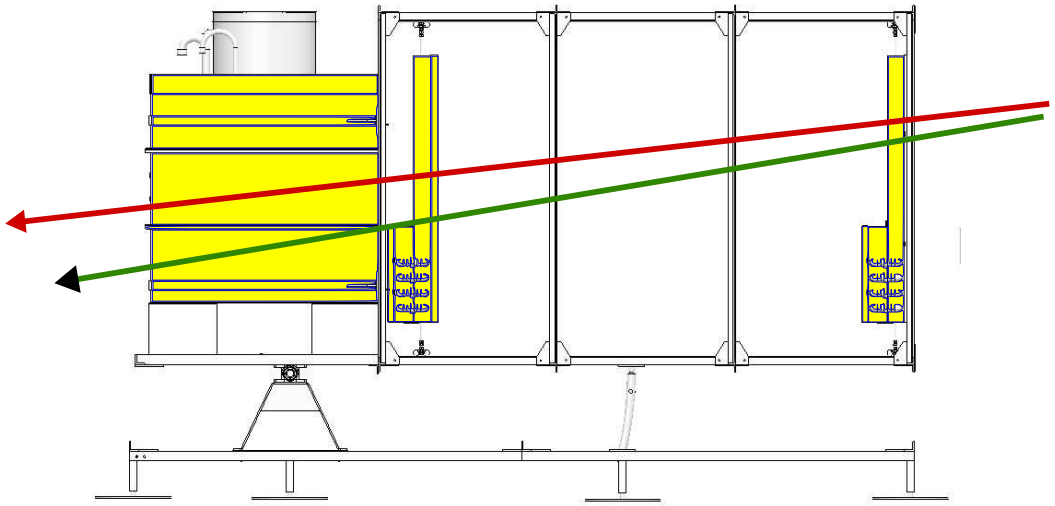

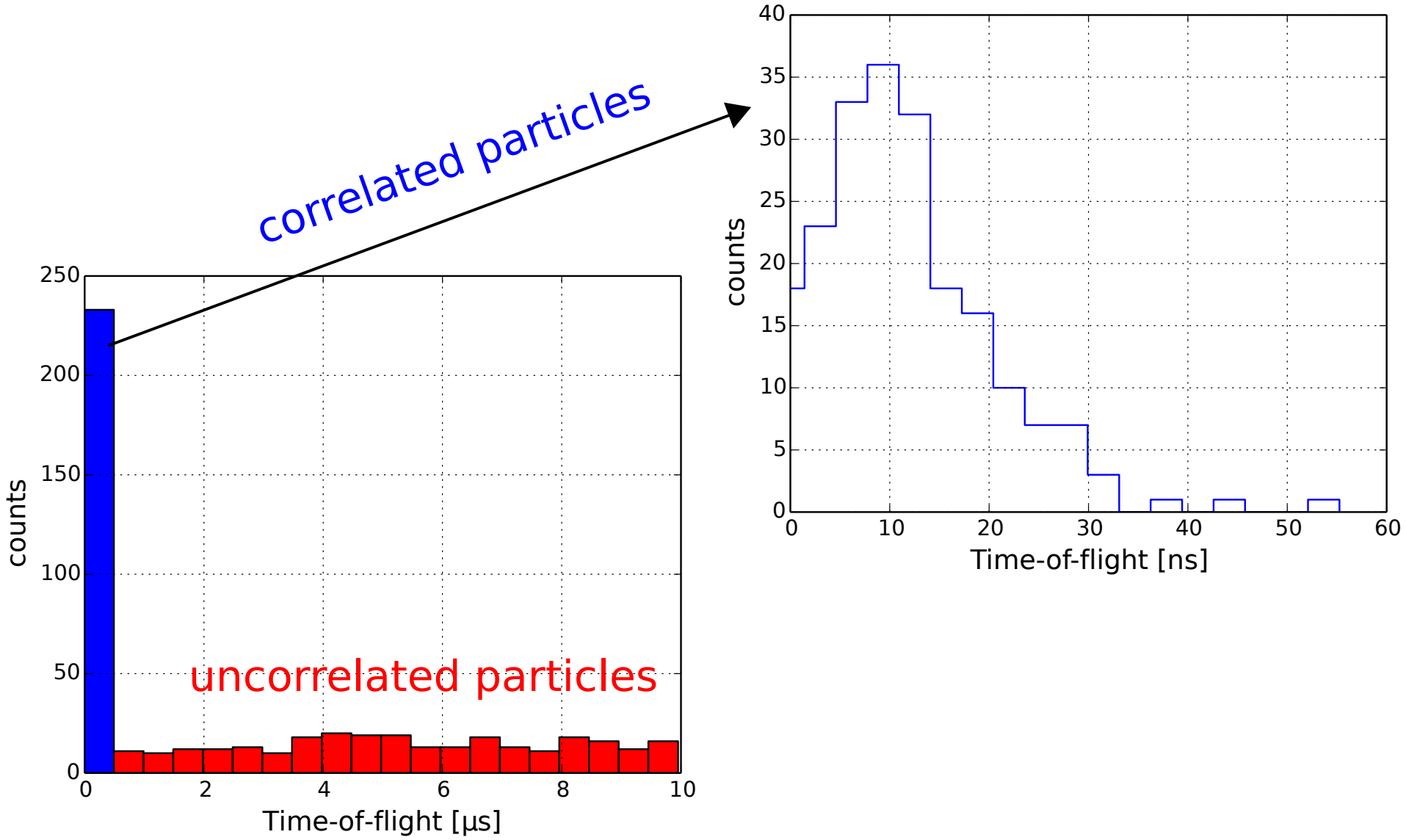
correlated particles
uncorrelated particles
counts
Time-of-flight [µs]
0
50
100
150
200
250
0
2
4
6
8
10
counts
Time-of-flight [ns]
0
5
10
15
20
25
30
35
40
0
10
20
30
40
50
60

	Signal + background	Technique	Parameter
~100%	$e^{\pm}$ 36%	WCD	energy loss
	$\mu^{\pm}$ 33.6%		
	Multiple 30.4%		
33.6%	backward 16.3%	ToF	direction
	forward 83.6%		
27.8%	soft ?	ToF + mass + tracking	momentum
	hard ?		
?	**under analysis**	**Signal**	

Momentum estimation

PID -> mass

$$p_i = \frac{m_0 c d_i}{\sqrt{c^2 t^2 - d_i^2}}$$

ToF Tracking

$$\sigma_p^2 = \left(\frac{\partial p}{\partial t}\right)^2 \sigma_t^2 + \left(\frac{\partial p}{\partial d}\right)^2 \sigma_d^2$$

~138 ps ~5.6 cm

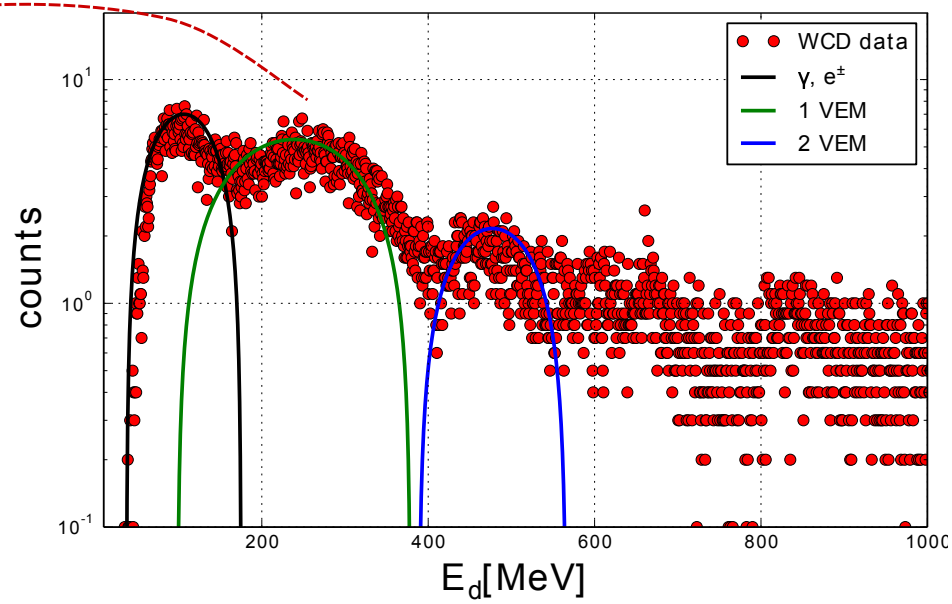

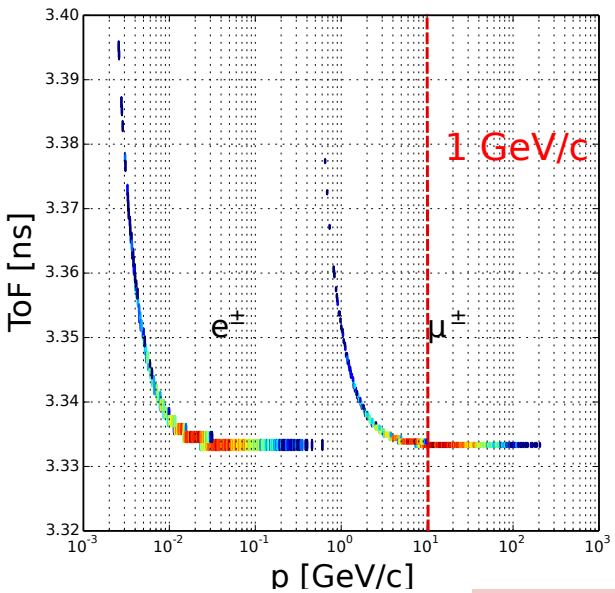

Conclusions and future work

- We found the background caused by the EM component of EAS represents $\sim 36\,\%$ of the recorded data, while the correlated multiple particle was $\sim 30{,}4\,\%$.
- The background due to backward muons depends on the elevation angle of the detector: for 15° it was $\sim 5{,}3\,\%$ taking into account the water volume of the WCD absorbs low energy particles (< 240 MeV).
- The multiple particle background was caused by two sources: **correlated particles** (from the same EAS) with relative arrival time < 300 ns, and **uncorrelated particles** generated by the cosmic ray background.
- We are applying machine learning techniques to separate automatically the signal from background.