40th International Conference of High Energy Physics.

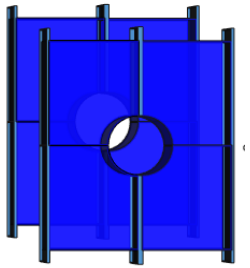

The Forward Diffractive Detector for ALICE

Solangel Rojas Torres, on behalf of the ALICE Collaboration

Czech Technical University in Prague
Faculty of Nuclear Science and Physical Engineering

Prague, Czech Republic
31 July 2020

solangel.rojas.torres@cern.ch

Introduction

ALICE - A Large Ion Collider Experiment

Is one of the main experiments at the LHC and is devoted to the **study of strongly interacting matter**.

- During the ongoing **Long Shutdown 2** , ALICE is implementing significant **upgrades of detectors and systems** [1] to cope with the conditions of the **LHC Run 3 and 4**.
- **Increased interaction rates and luminosities** are expected:
  - **Pb-Pb -> 50 kHz and 6 x 10^{-27} cm^2 s^{-1}.**
  - **Proton-proton -> 1 MHz and 10^{-34} cm^2 s^{-1} .**

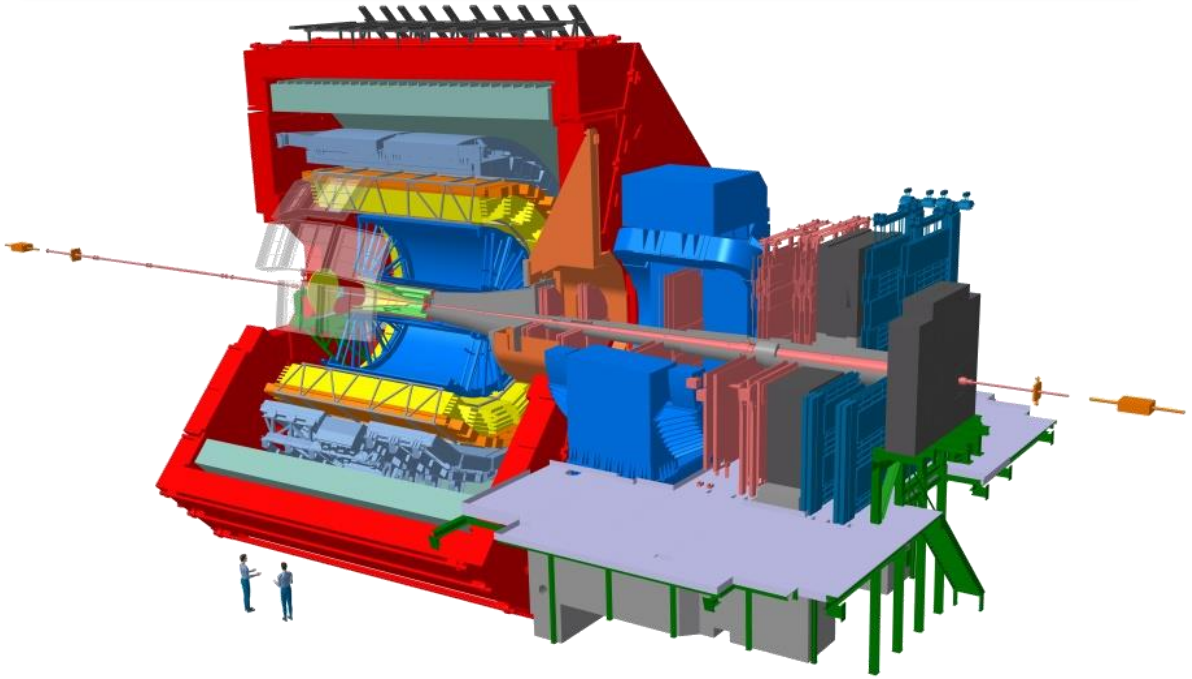

FIT - Fast Interaction Trigger

The FIT detector [2] consists of three subsystems: **FV0**, **FT0** and **FDD**. They will share common **Front-End Electronics** and **Detector Control System**.

FIT will serve as:

- Interaction trigger
- Luminometer
- First indicator of the vertex position
- Forward multiplicity counter
- Provide precise collision time for the TOF-based particle ID
- Determine the centrality and interaction plane for flow measurements.

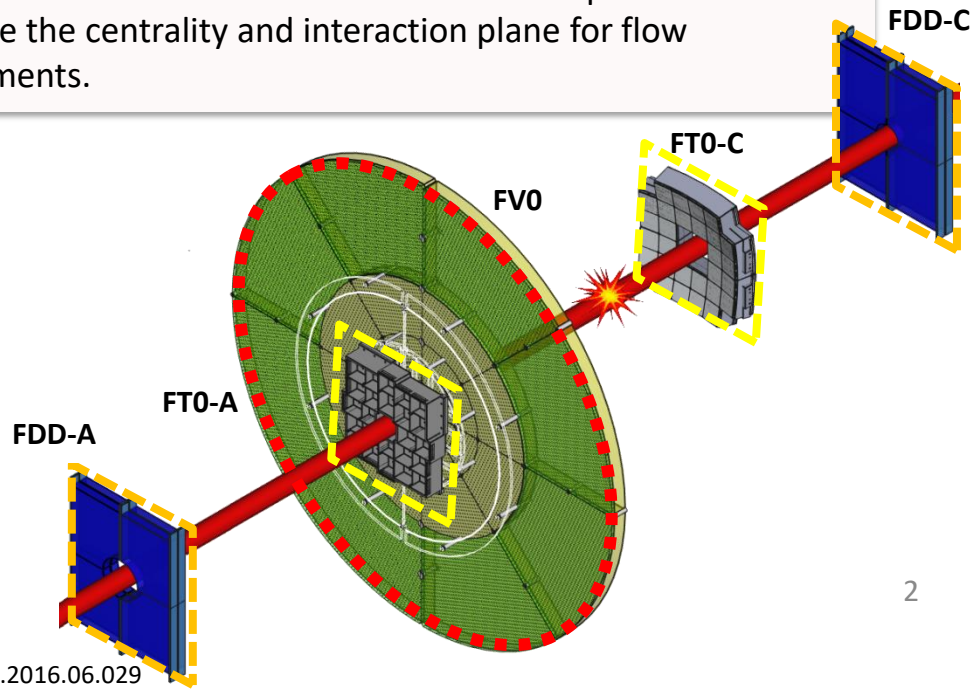

[1] Upgrade of the ALICE Experiment: Letter of Intent, ALICE Collaboration (2012). DOI 10.1088/0954-3899/41/8/087001
[2] New Fast Interaction Trigger for ALICE, Wladyslaw HenrykTrzaska et.al. (2016). Nucl. Instrum. Methods A. DOI doi.org/10.1016/j.nima.2016.06.029

Layout and Motivation

Placement and Segmentation

The **FDD** is the **successor** of the **AD detector.** Implementation of **faster components** and **new electronics** for the FDD is **significantly improving the overall performance**. The geometry and placement remains unchanged.

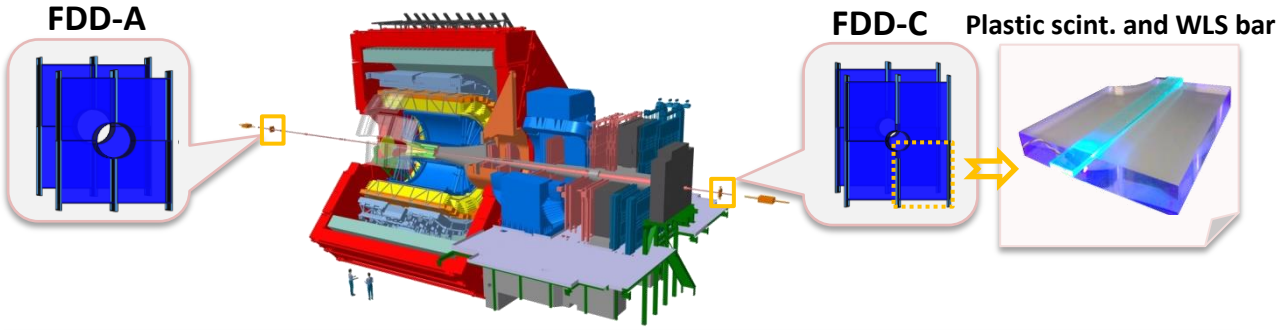

Each **pad** has two wavelength shifting (**WLS**) bars connected to individual **PMT** via a bundle of clear optical fibers.

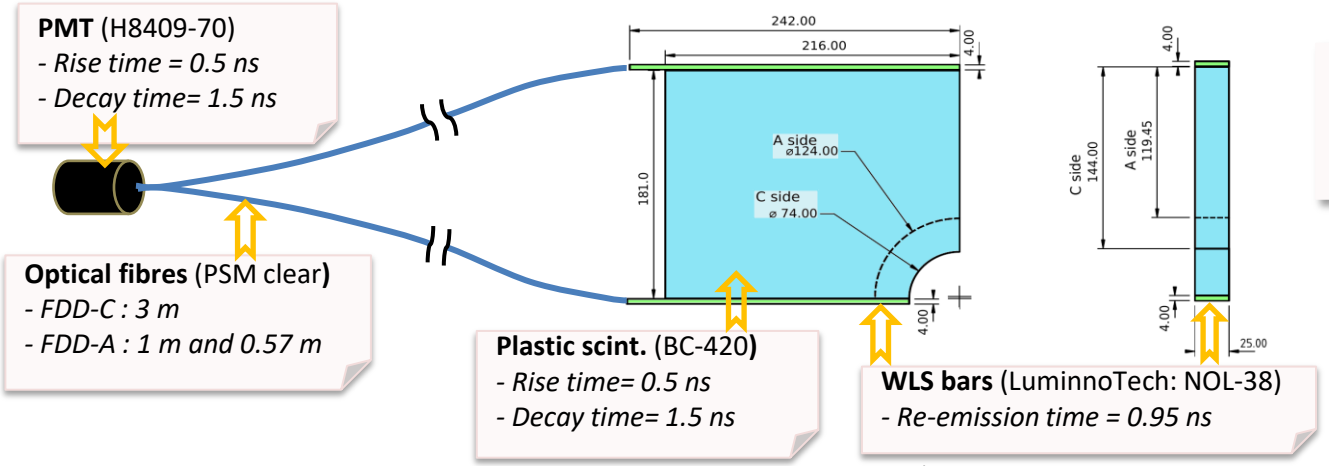

Background Monitoring

Since FDD will cover both, the A- and C-sides it is **ideal for beam monitoring and beam-gas rejection** in a similar way as the AD was used during the LHC Run 2 [3].

Xe-Xe $\sqrt{s_{NN}}$=5.44 TeV

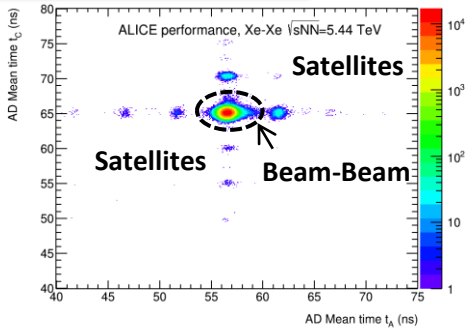

Proton-proton $\sqrt{s_{NN}}$=13 TeV

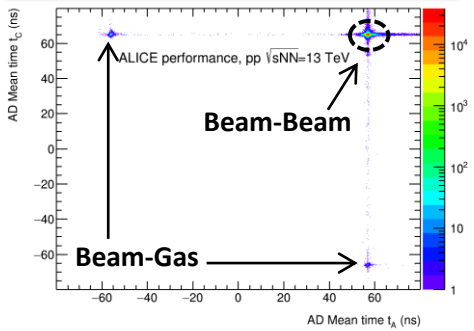

Pseudorapidity coverage

Due to the **forward pseudorapidity coverage**, the FDD will contribute to the:

- Measurements of cross sections of **diffractive** processes [4].
- Studies of **ultra-pheriperal** collisions [5]

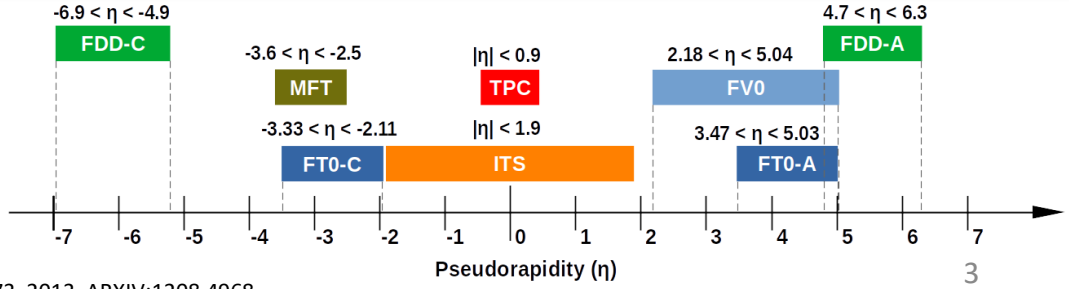

[3] Beam-Gas Background Observations at LHC, Gibson, Stephen et.al. (2017). DOI 10.18429/JACoW-IPAC2017-TUPVA032
[4]Measurement of inelastic, single- and double-diffraction cross sections in proton–proton collisions at the LHC with ALICE. Eur. Phys. J., vol. 73, 2013. ARXIV:1208.4968.
[5] Coherent J/ψ photoproduction at forward rapidity in ultra-peripheral Pb–Pb collisions at sNN=5.02 TeV. Physics Letters B, vol. 798, ALICE Collaboration (2019). doi.org/10.1016/j.physletb.2019.134926

Performance and calibration

Signal Time Width

The **reduction of the signal time width** of FDD with respect to AD was achieved by using materials with a better timing response in the construction of the pads. Tests were performed with cosmic muons.

Example of two signals with similar amplitudes triggered by a cosmic muon.

Distributions of the AD and FDD time width signals at 10% of the maximum amplitude.

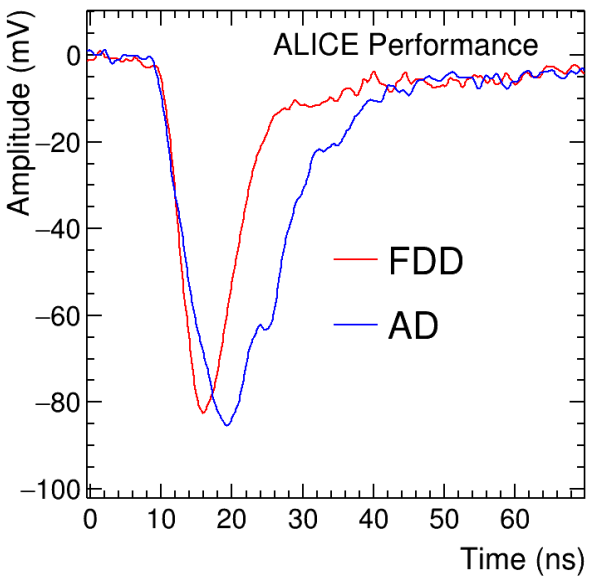

FDD Width = 29.14 ns

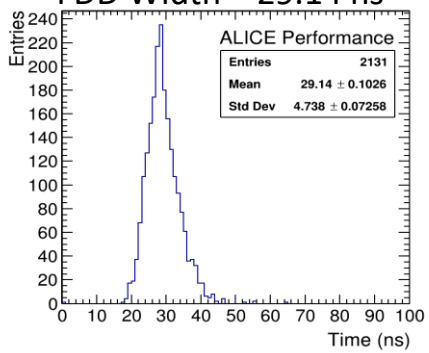

AD Width = 39.93 ns

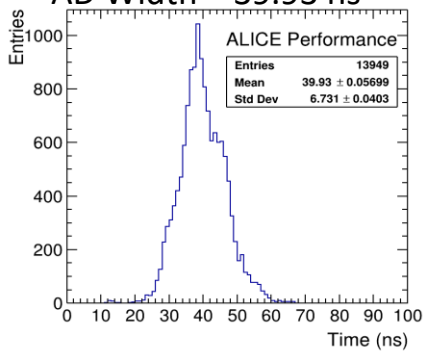

Laser calibration system

The laser calibration system will allow the monitoring of the detector to adjust parameters to guarantee the best performance.
In summary this system will be used to perform:

- Amplitude and time calibration
- Quality assurance
- Monitoring of the gain and ageing of the components, such as the PMTs and plastic scintillators.