Development, construction, qualification and assembly of the Mu2e electromagnetic calorimeter mechanical structures and composite materials

30th International Symposium on Lepton Photon Interactions at High Energies

DANIELE PASCIUTO on behalf of the Mu2e Calorimeter group

12nd January 2022

The Mu2e Experiment

- Fermilab (Batavia, IL, USA)
- Search for coherent neutrinoless muon to electron conversion in the field of an aluminum nucleus (CLFV)
  - $\mu^- Al \rightarrow e^- Al$
- Expected beam data taking in 2023-2024

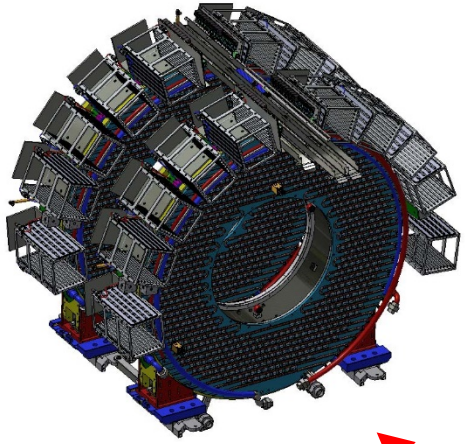

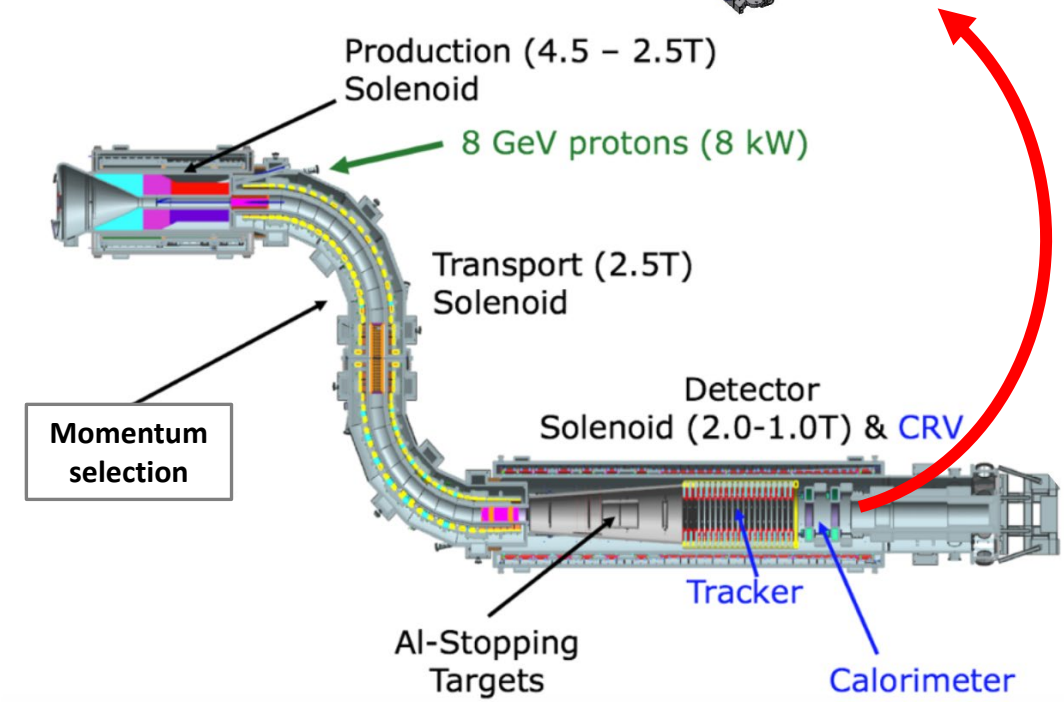

The Electromagnetic Calorimeter

Specification @ 100 MeV/c

- $\sigma_E/E < 10\%$
- $\sigma_T < 500\ ps$
- $\sigma_{X,Y} < 1$ cm

Global envelope:

- Rin= 336 mm
- Rout = 910 mm
- Width= 350 mm

- Components per 1 disk
  - 674 un-doped CsI crystals
  - 1348 SiPMs + front-end electronics
  - 10 crates host power distribution + DAQ boards
  - Support structure
    - 1 external aluminum ring
    - 1 internal carbon fiber ring
  - Calibration system
    - CF770 fluid (gamma @6.13 MeV)
    - Laser
  - Cooling system (HFE-7110 -10/-20 C)
  - Support feet + cabling

- Operational conditions
  - 1 T B field
  - 10^{-4} torr
  - 90 krad, 10^{12}n cm^{-2}year^{-1})
  - 25°C

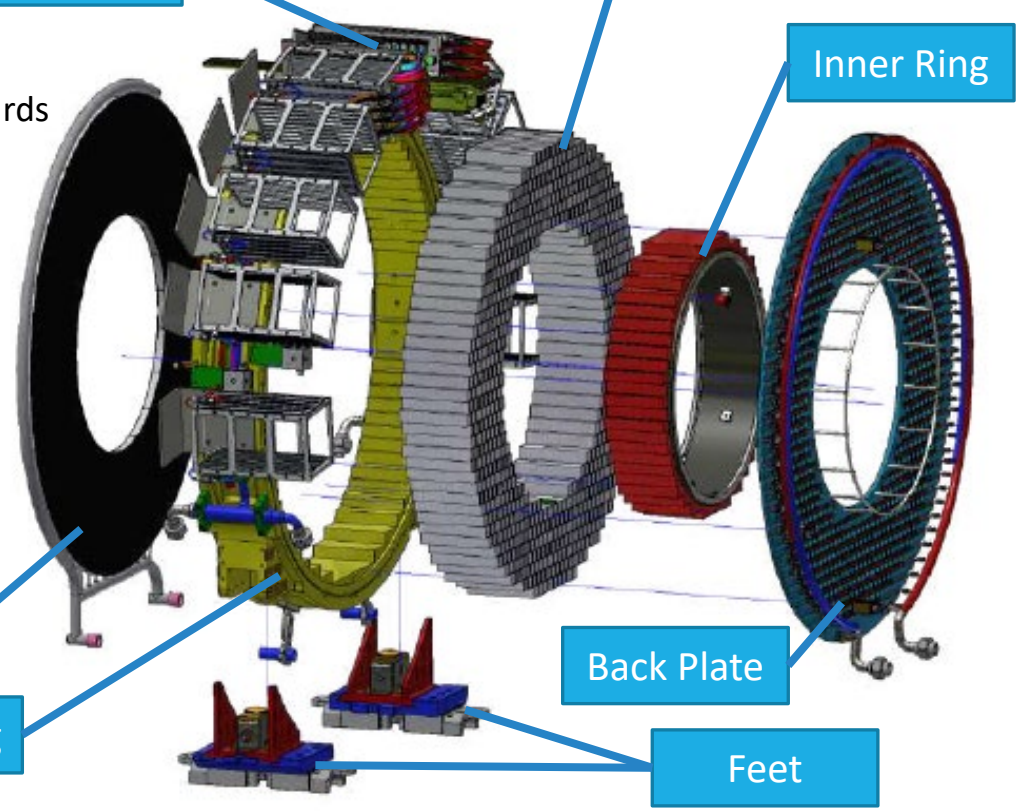

Crystals Quality Assurance

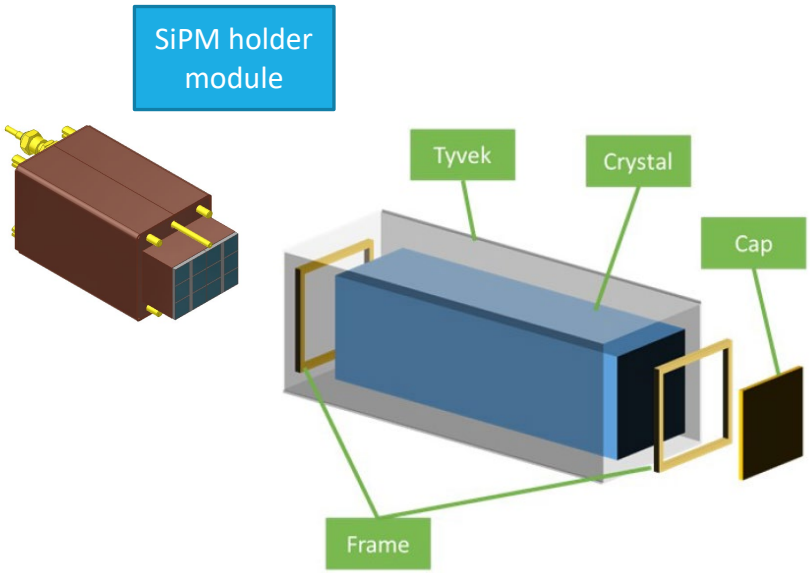

- 674 CsI crystals/disk (34x34x200 mm^3)
- Wrapped with Tyvek foils (150um)
- Separated by Tedlar layers (50um)
- Staggered 'donut'-shape matrix
- Linear dimensional tolerance < 0.1 (short side)/0.2 (long side) mm
- Planarity and perpendicularity < 0.1 mm (checked 100% crystals)

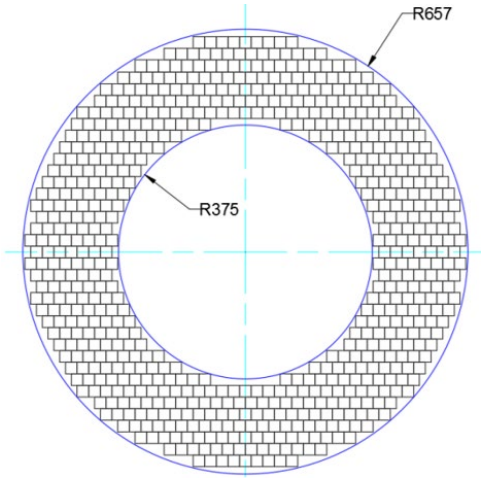

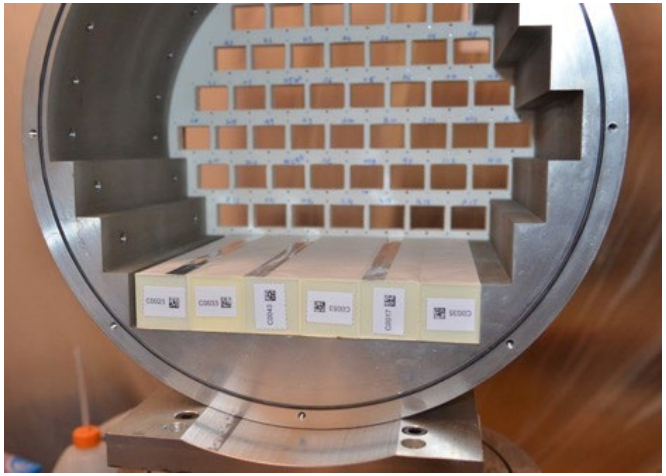

Crystals Stacking

- What we call “disk” is a N x M hollow matrix of crystals (not easy)
- Performed extensive tests of vertical/horizontal stacking
- Developed model to predict crystals positions vs row/column
- Left clearance in the crystal support structures
- Fine tuning of crystals positions still possible with Tedlar sheets

- $Pitch_{vertical} = 34.410\ mm$
- $Pitch_{horizontal} = 34.423\ mm$

Max error (higher column - wider row)

- $error_{vertical} = \pm 0.303\ mm$
- $error_{horizontal} = \pm 0.939\ mm$

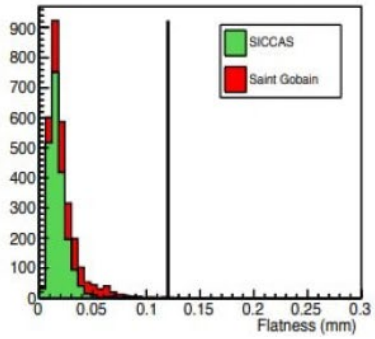

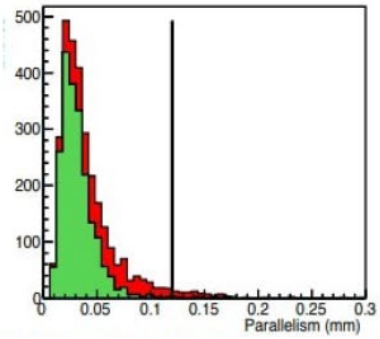

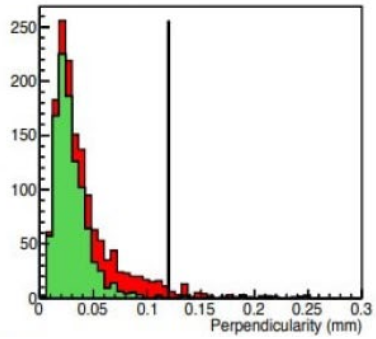

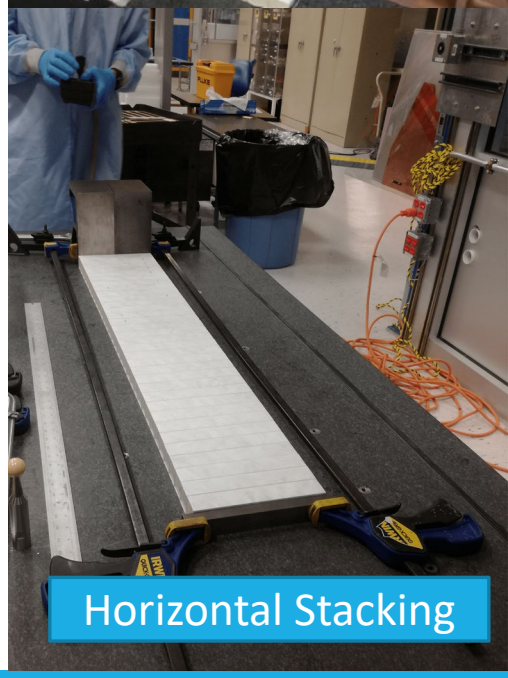

SiPM holder

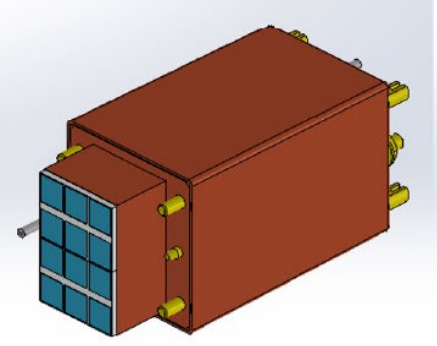

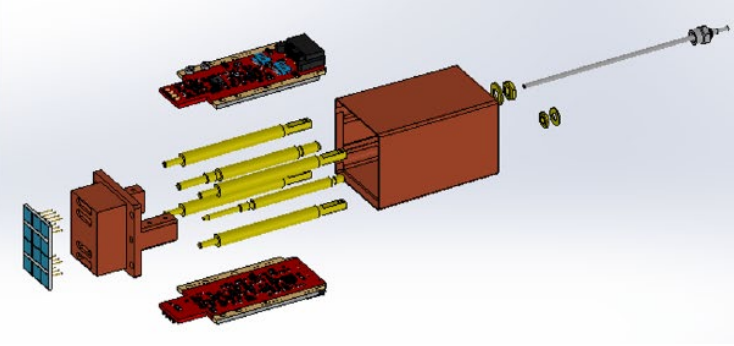

- The module is made of 2 SiPMs and 2 FEE with a fiber needle to flash laser on the crystal directly
- Bulky copper structure for optimal thermal transmission
- Fastened to the Backplate cooling lines
- SiPMs are glued on the holder for optimal thermal transmission
- Reduce dark SiPM dark current
  - must be <2mA@-10°C end life
  - if we work at 20°C we will have 16-20 mA
  - Factor of 2 each 10°C
- Stabilize SiPM gain over time

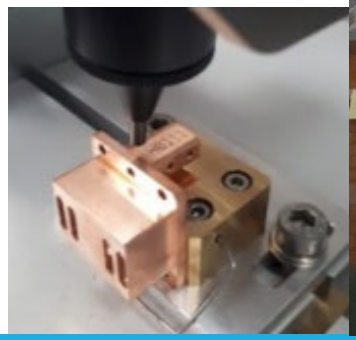

Mechanical Support: Outer Ring

- Robust structure: supports 100% calorimeter mass (1400 kg)
- Monolithic C-profiled ring machined from a block of Al 6082 for maximum stiffness
- Internal surface “stairway” shaped to allow for crystals staggering

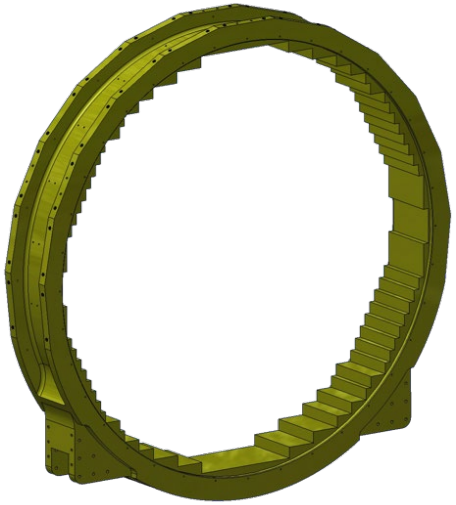

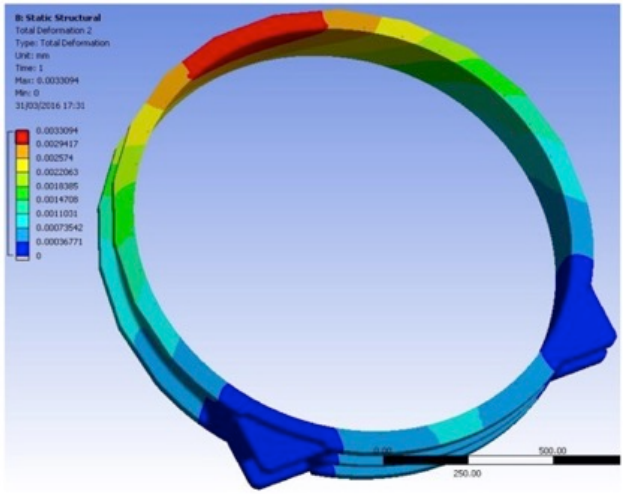

Mechanical Support: Inner Ring

a) ID of 712 mm, 4.2 mm thick, F-.220/193/50 CF fabric (0/90) with cyanate ester resin
b) ID of 672 mm, OD of 712 mm, 13 mm thick, 5083 H111 Al alloy
c) Sandwich with 1.4 mm CF skins (same as a)) and a core of aluminum honeycomb (series 3003) 22mm thick, 3/8" cell size, and 0.003" wall thickness

- Three main components:
  - One cylindrical carbon fiber skin (see a)
  - Two Aluminum rings to increase stiffness (see b)
  - Three carbon fiber - Aluminum honeycomb steps to generate reference planes for crystals stacking (see c)
- Material budget optimized to reduce particles energy loss

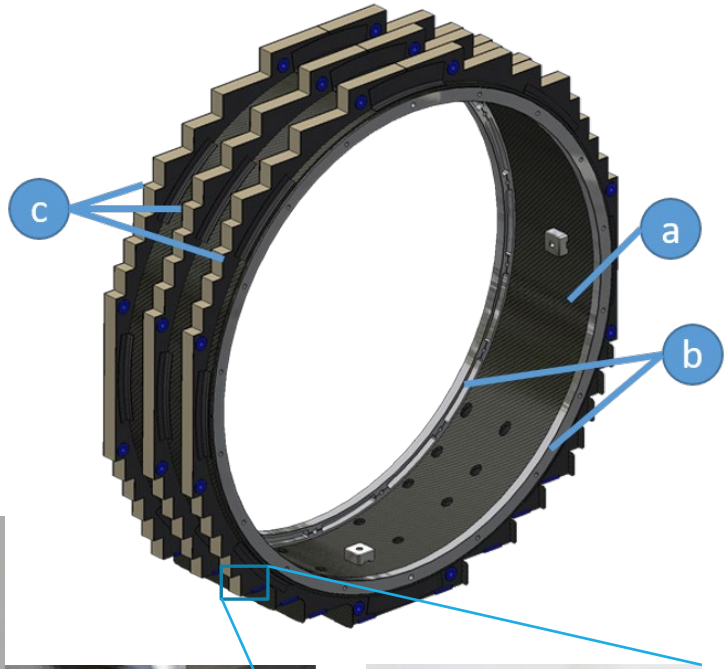

Handles to optimize Inner Ring deformations

- Added a series of supports to adjust load distribution and position constraints
- Performed FEM analysis of contact stress/deformation
- Planned solution:

  Mobile supports (G10 screw + PEEK foot)

  + CF planes (to minimize pressure on crystals)

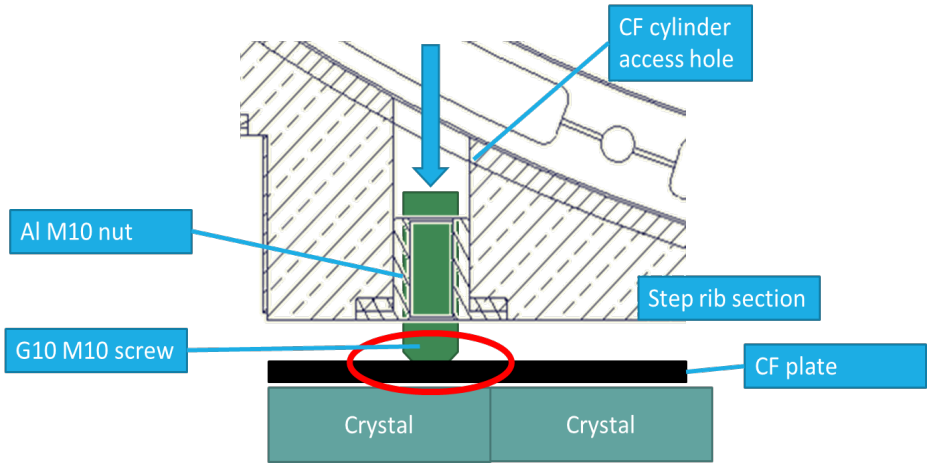

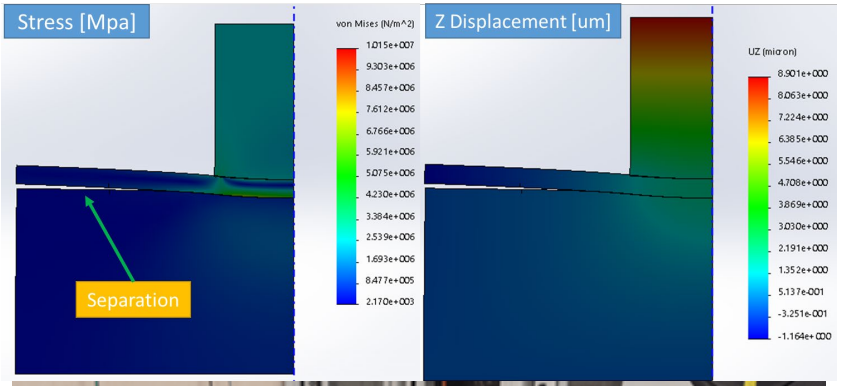

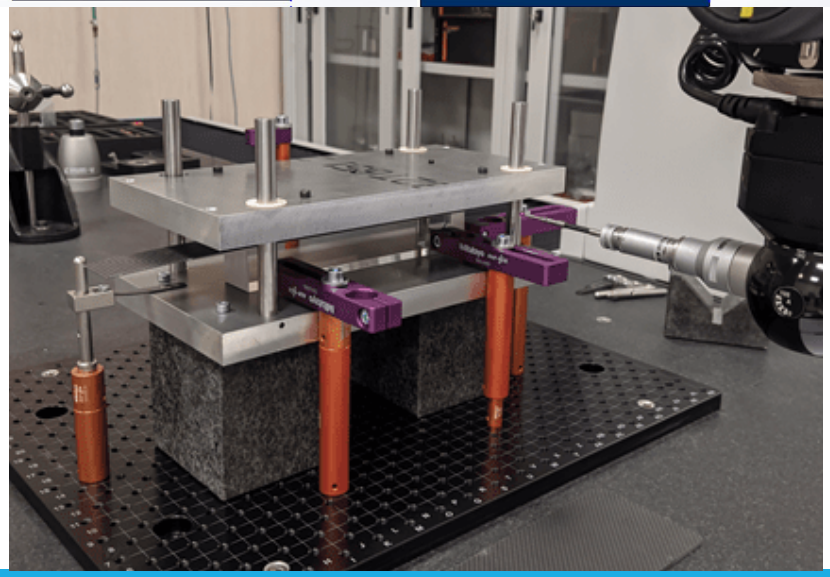

Calibration Source: The Front Plate

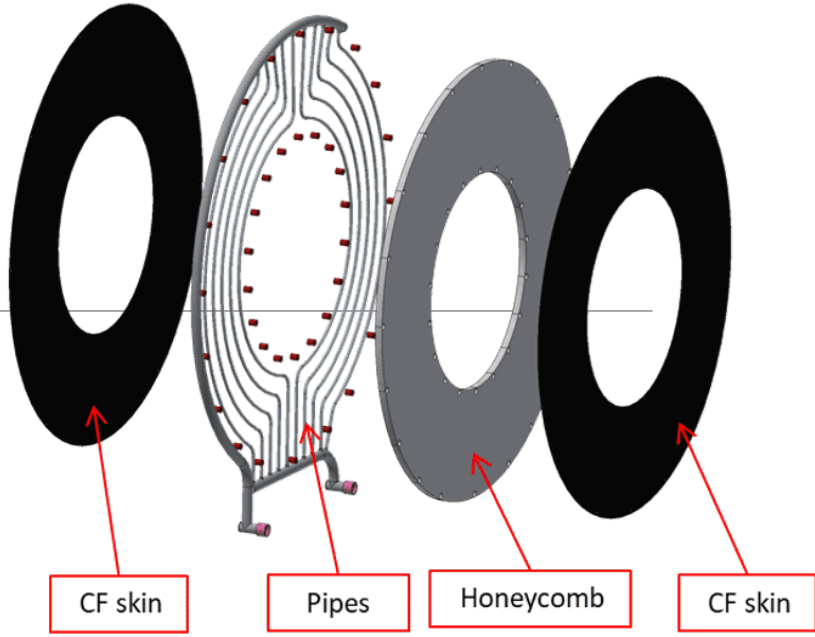

- Support the pipes for the calibration source (CF-770 fluid)
- Low mass structure with thin wall aluminum pipe (minimize particles energy loss)
- Frontal enclosure for crystals protection
- Tested Leak rate < $3 \cdot 10^{-10}$ mbar l/s @ 10-3 mbar with Vacuum Helium Leak test

- Sandwich with 1.4 mm CF skins and a core of aluminum honeycomb (series 3003) 22mm thick, 3/8” cell size, and 0.003” wall thickness
- Thin wall pipe: 3003-H112, 0.375’’ OD x 0.02’’
- 1.2 MeV Energy loss @100MeV

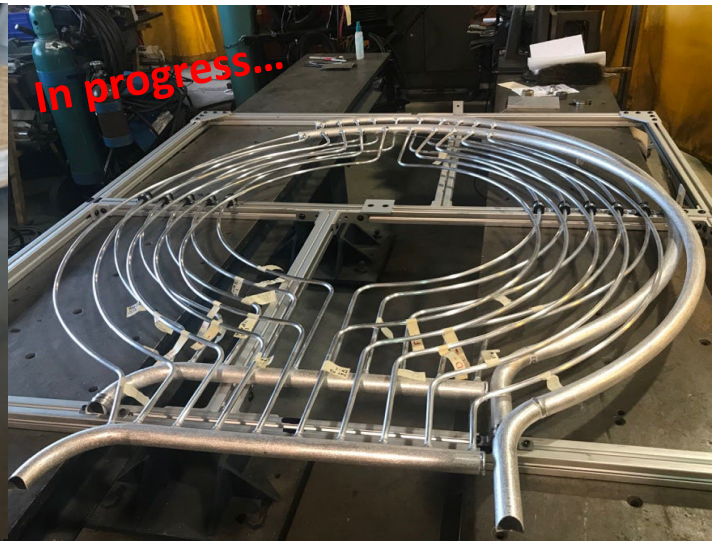

SiPM-FE Support: The Backplate

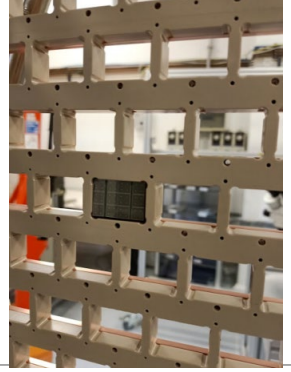

- $\overline{\Delta T} < 1°C$ between inlet and outlet
- Head loss <0.6 bar
- $h_c \geq 2000\ W/m^2K$

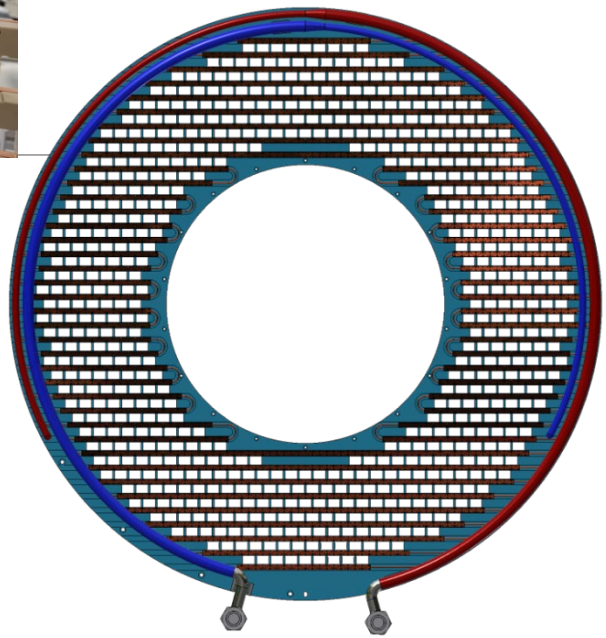

- Supports 674 Front End units (SiPMs + FEE)
- Milled PEEK plate (2 plates glued with a V-Notch joint)
- Integrates cooling of Front-End units (SiPMs + FEE)
- Embeds brazed copper lines (HFE-7100 @-10 C)
- Cooling lines running in parallel between I/O manifolds (AISI 316L) for homogeneous fluid distribution

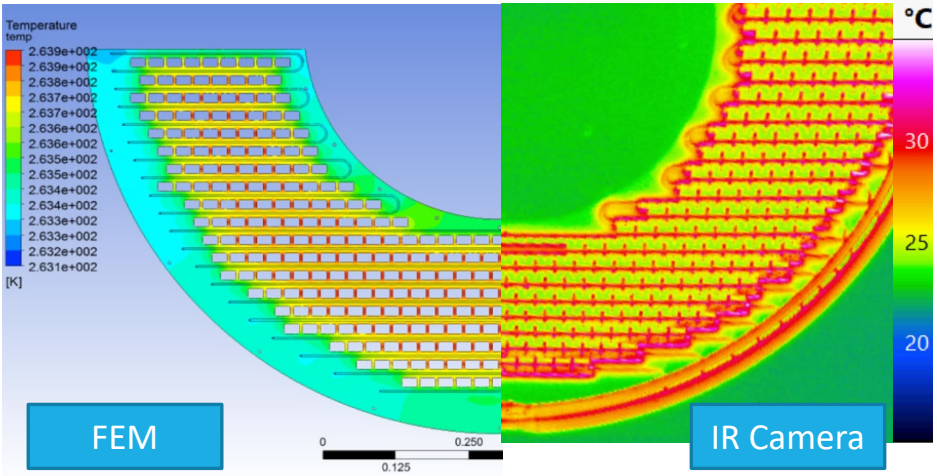

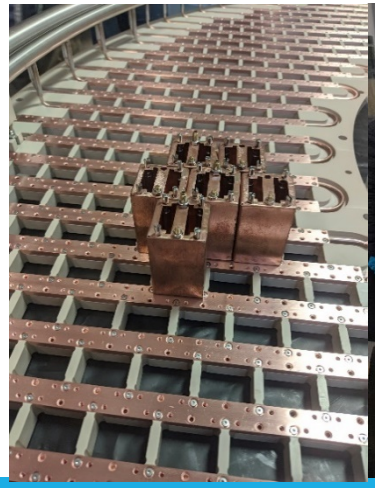

DAQ Crates

1. External side
2. Internal side
3. Top
4. Bottom
5. Tungsten shield
6. Inlet/Outlet pipe
7. Cable holder
8. Cable containment wall

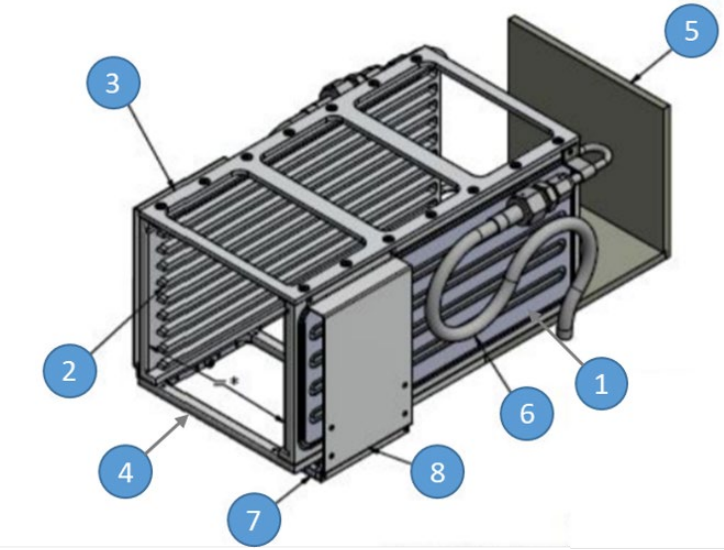

- Host DAQ boards (8 boards/crate)
- Tungsten shields to improve protection from radiation
- Embed cooling lines to reduce envelopes and optimize thermal performance
- 10 crates in parallel between I/O manifolds
- Flexible S-shaped connections
- Includes FE cables holding system

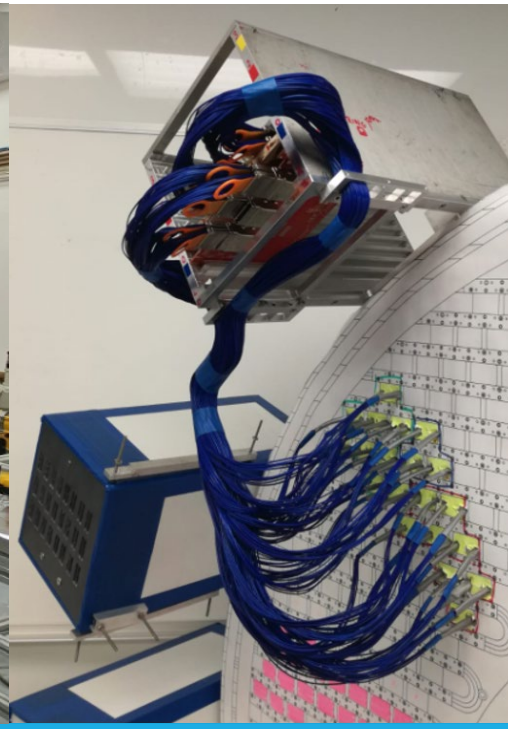

Thermal performance

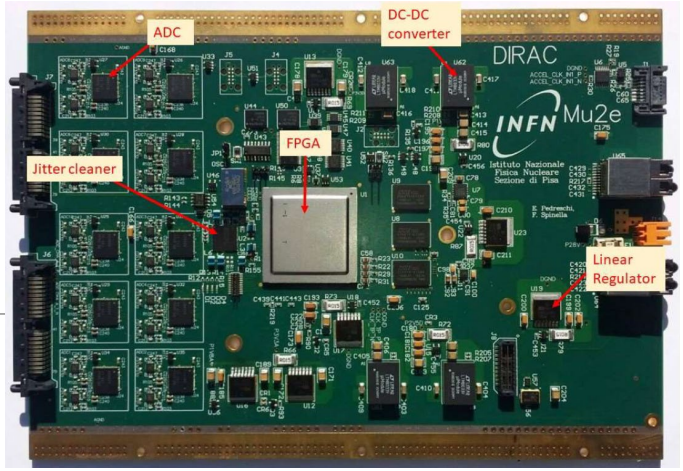

- Remove 40 W/DAQ board
- Copper plate with vacuum proof grease (Aprizon) to improve thermal exchange
- Cardlocks to fix boards and improve thermal exchange

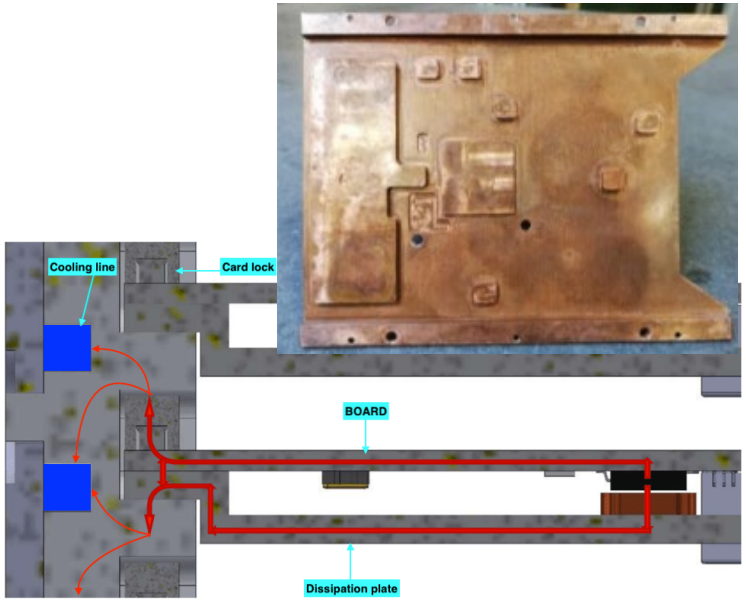

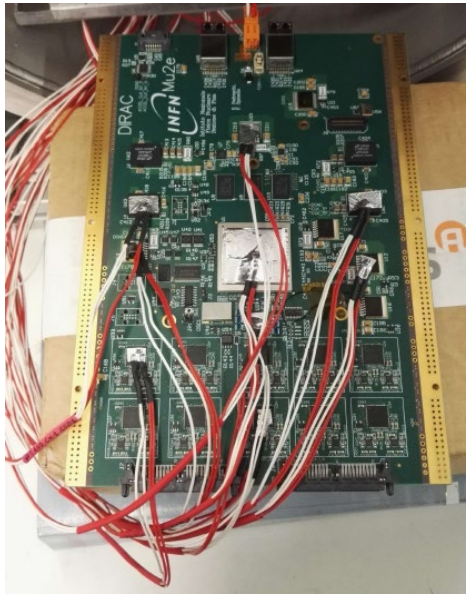

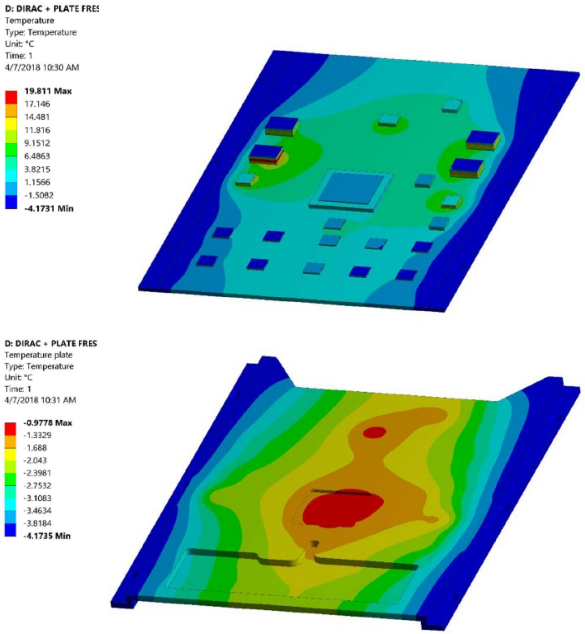

Conclusions

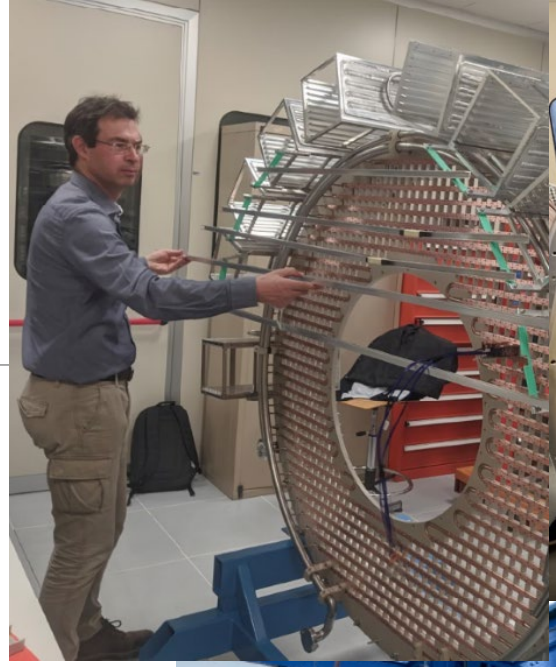

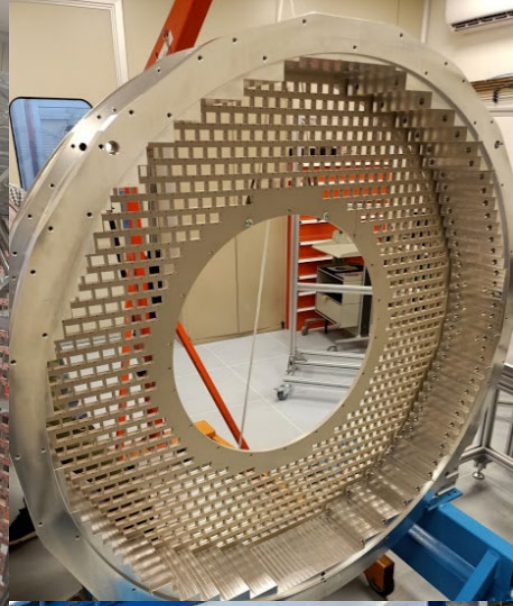

- Mu2e EM calorimeter mechanical design finalized.
- It took many years of prototyping and engineering to reach this stage!
- Most of the large components already built and tested
- Some parts still being built, but not far in time
- Crystals, SiPMs production concluded, FEE, cables and DAQ boards under production
- **Looking forward to start assembly in the summer!**

This work was supported by the European Union's Horizon 2020 research
and innovation program under the Marie Sklodowska-Curie
Grant Agreement no 734303, 822185, 858199, 101003460

European Commission

Thanks for your attention