Update on Photon Detection Module for Large-Scale Noble Liquid Experiments and Precise Timing Systems

K. Deslandes, V. Gauthier, P. Martel-Dion, F. Nolet,
S. Parent, C. Richard, T. Rossignol, N. Roy, N. St-Jean,
A. Turala, F. Vachon,
F. Retiere*, R. Fontaine, S. A. Charlebois

Université de Sherbrooke, Canada
* Triumf, Canada

TIPP2021
May 28th 2021

UNIVERSITÉ DE SHERBROOKE

3!T Institut interdisciplinaire d'innovation technologique UNIVERSITÉ DE SHERBROOKE

GRAMS

Photodetection Module : Photon-to-Digital Converters (aka Digital SiPM) and Enabling Technologies

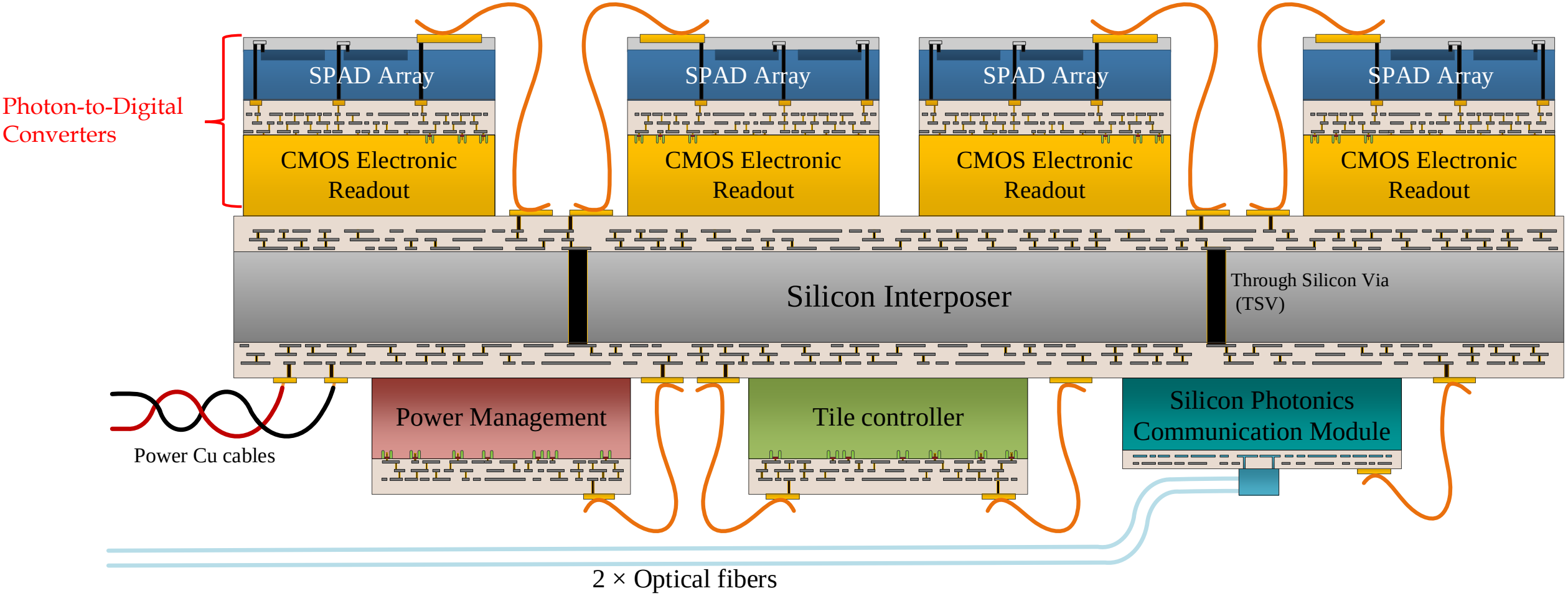

From Analog to Digital Silicon Photomultiplier

UNIVERSITÉ DE SHERBROOKE

Analog and Digital Silicon Photomultiplier (SiPM): The Definition

Single photon avalanche diode (SPAD) is the basic unit cell of **analog and digital SiPM**

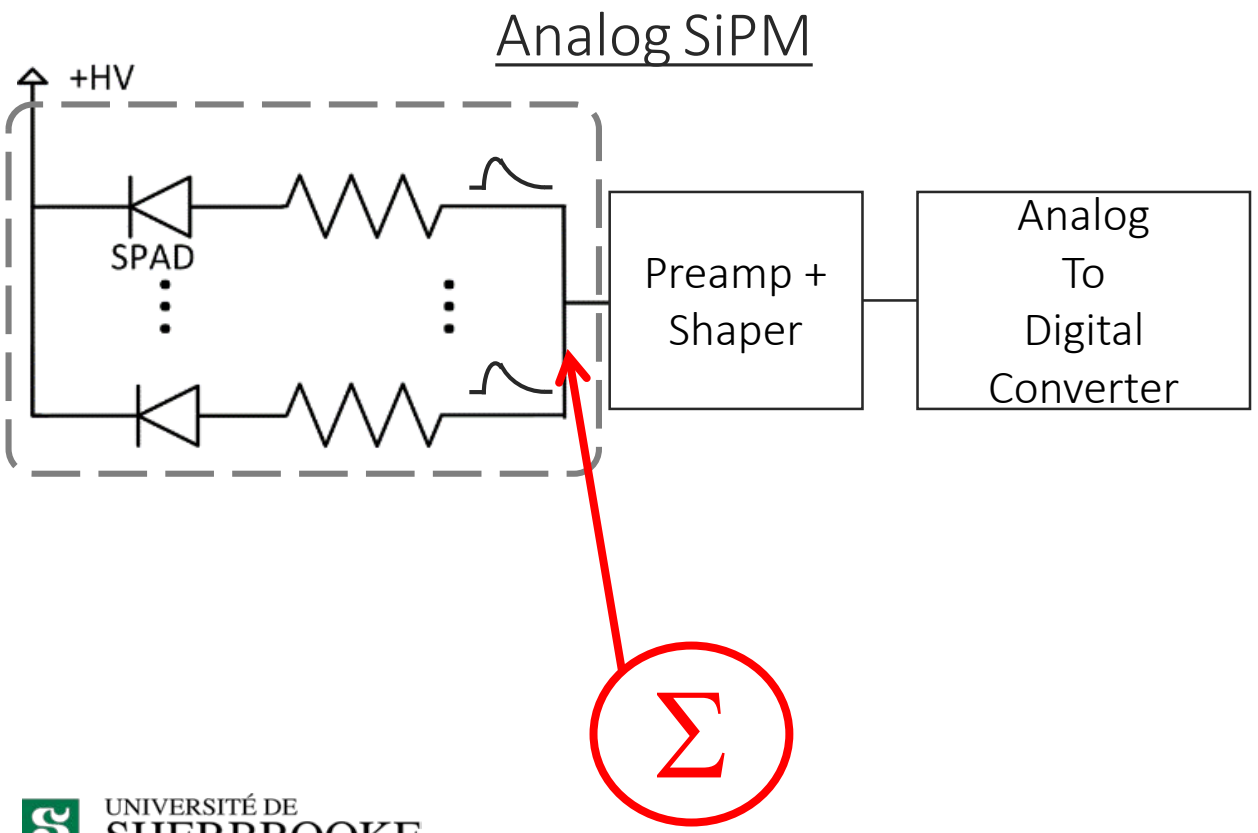

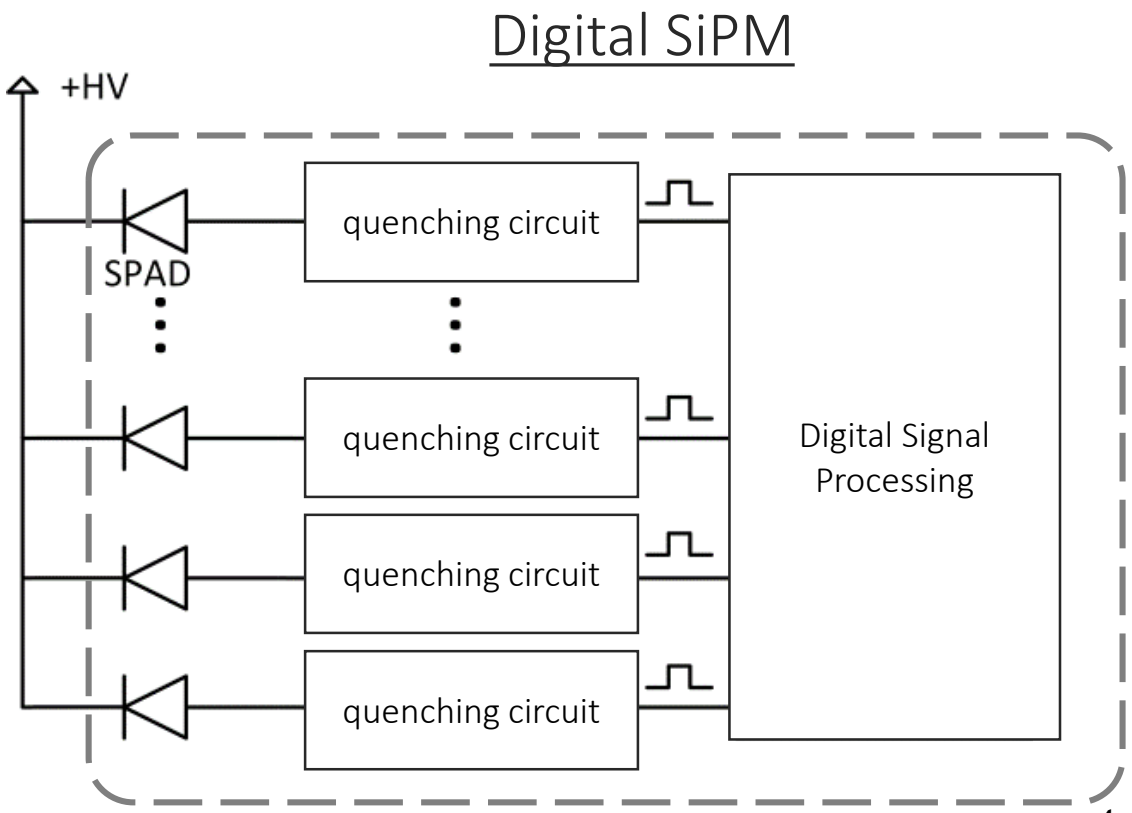

The Analog SiPM Paradox

- A SPAD is a **Boolean detector ("0" or "1"): digital information available at the sensor level**

- **Analog SiPM = Sum of boolean detectors (array of SPAD) to get a linear response…**

- Then, use a current/transimpedance amplifier + shaper + ADC

To digitize the data… again!

jean-francois.pratte@usherbrooke.ca

Enabling Progress for Single-Photon Detection: Digital SiPM Advantages

- **Each SPAD is coupled one-to-one** with its individual readout circuit
  - **Photon-to-bit conversion** at the sensor level
- Improved noise immunity
- Output capacitance is not an issue (compared to analog SiPM)
- Single photon counting over the entire dynamic range
- Control over each SPAD: **faulty or radiation damaged = shut off**
- Mitigates afterpulsing noise (programmable holdoff/deadtime)
- No trigger = Low power consumption

jean-francois.pratte@usherbrooke.ca

Photon-to-Digital Converter : Motivation and going 3D

UNIVERSITÉ DE SHERBROOKE

3D versus 2D Photon-to-Digital Converters

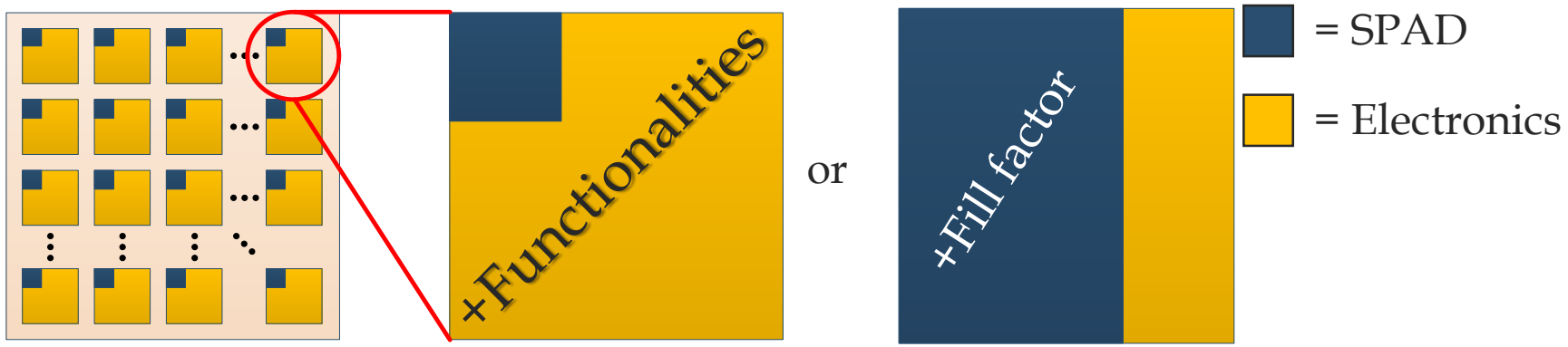

The solution:
3D vertical integration

- Enables high photosensitive fill factor
  with
- Advanced digital signal processing
- Choice of SPAD optimal technology
  with
- Choice of CMOS optimal technology for application specific functions

Photodetection Module

- Silicon-based solution for **cryogenic instrumentation** → coefficient of thermal expansion matching
  - Particle physics instrumentation: liquid argon and liquid xenon experiments
    - nEXO (neutrino) : ~5 m^2
    - ARGO (dark matter) : ~250 m^2
  - Quantum communication (quantum key distribution satellite receiver)
- Medical Imaging
  - Positron emission tomography (PET)
  - Computed tomography (CT)
- Neutron Imaging

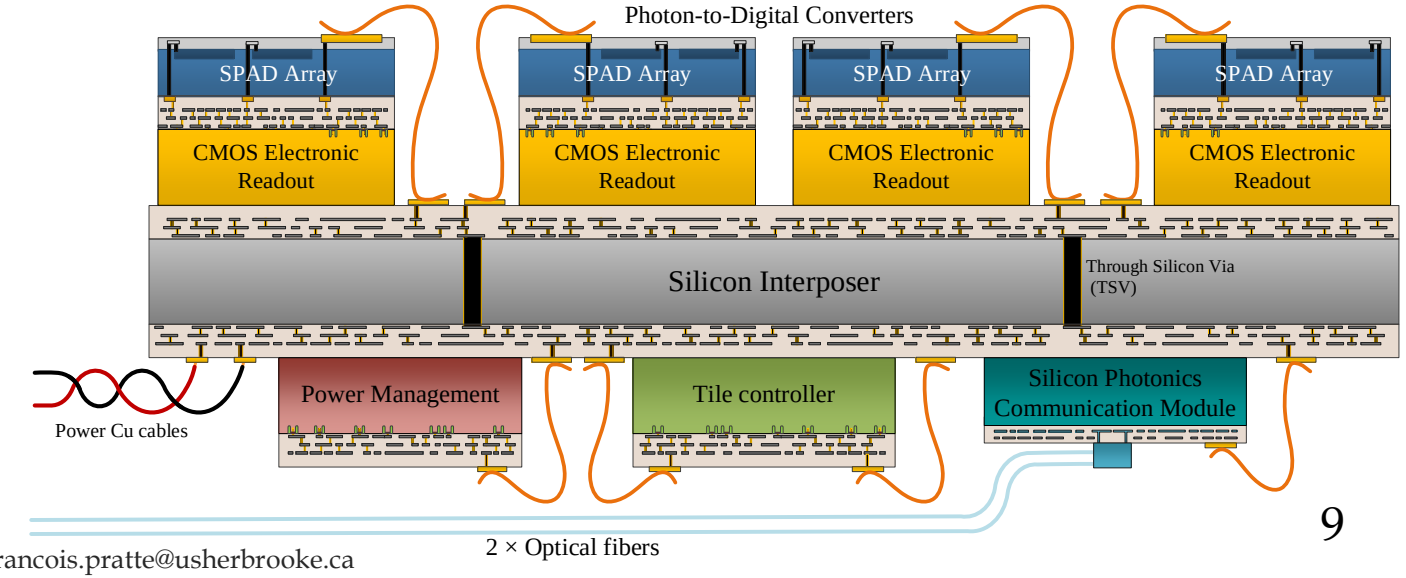

Photon-to-Digital Converter : SPAD Array Technologies

UNIVERSITÉ DE SHERBROOKE

3D Photon-to-Digital Converters : SPAD Array Technologies

- Frontside illumination
  - Sherbrooke – Teledyne DALSA custom process SPAD array
  - CMOS SPAD
    - TSMC 180 nm
    - TSMC 65 nm
- Backside illumination concept ongoing at Triumf (F. Retiere)

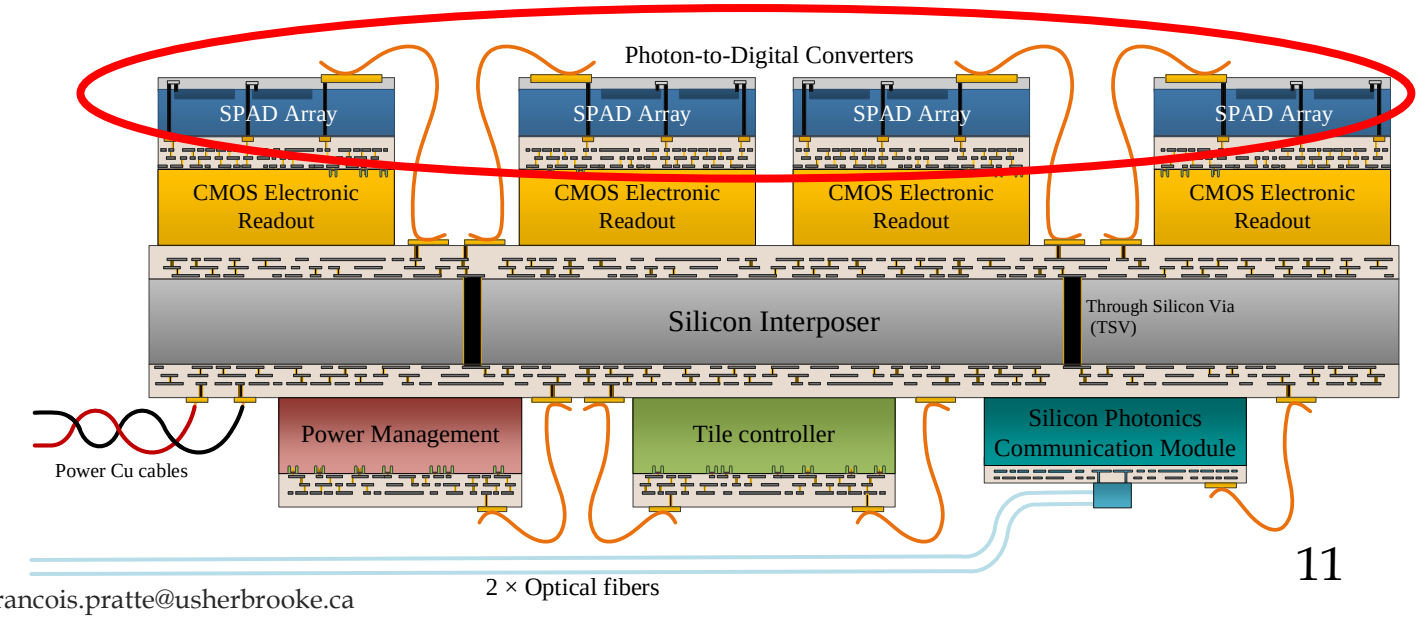

SPAD Array Technologies:
Sherbrooke – Teledyne DALSA SPAD array

UNIVERSITÉ DE SHERBROOKE

Sherbrooke – Teledyne DALSA SPAD and Flying Probe

- Single cell with various:
  - SPAD size and shape
  - process variation
- Small array (4 x 4 cells)
  - cell size and pitch
  - w/ or w/o trench

- 6″ wafer-level flying probe
- Single channel
- Multichannel probe under development now

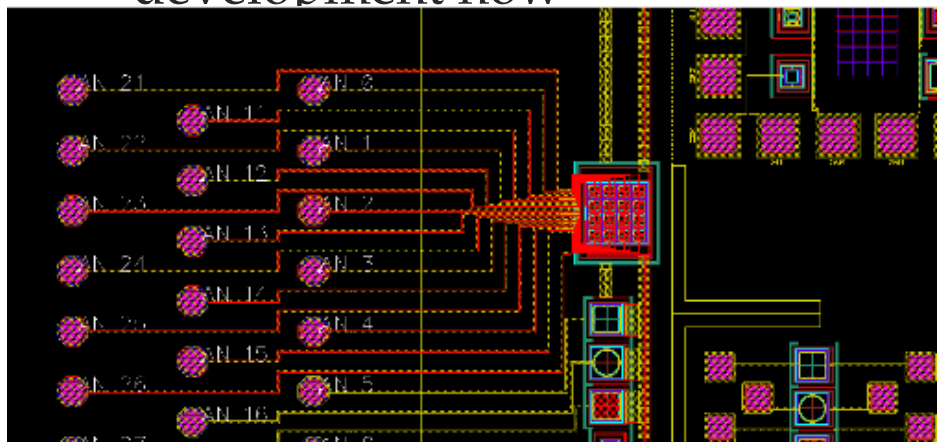

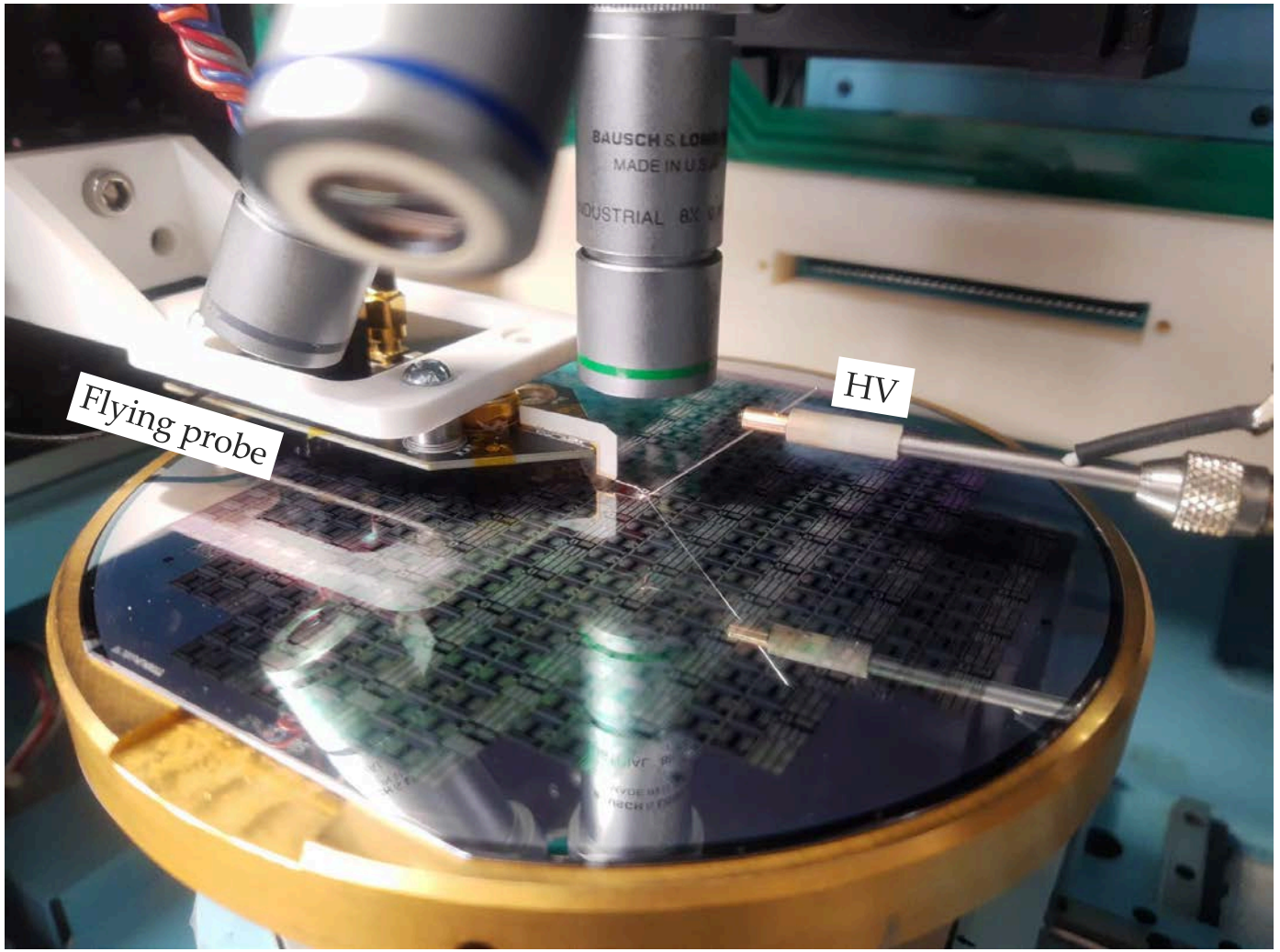

jean-francois.pratte@usherbrooke.ca

Chip Probe + SPAD TDSI

Chip Probe + TDSI (35 um) p+/deep n-well
Temp. = 20C
Vbd/Vov = 22.1 V/3.3 V (15%)
Median DCR/AP (deadtime) = 631 cps / 8% (60 ns)
PDE peak (%) = 60% @ 420 nm
PDE ≥ 30% = 400 – 565 nm
SPTR(ps FWHM) = 21 (820 nm) / 34 (410 nm)

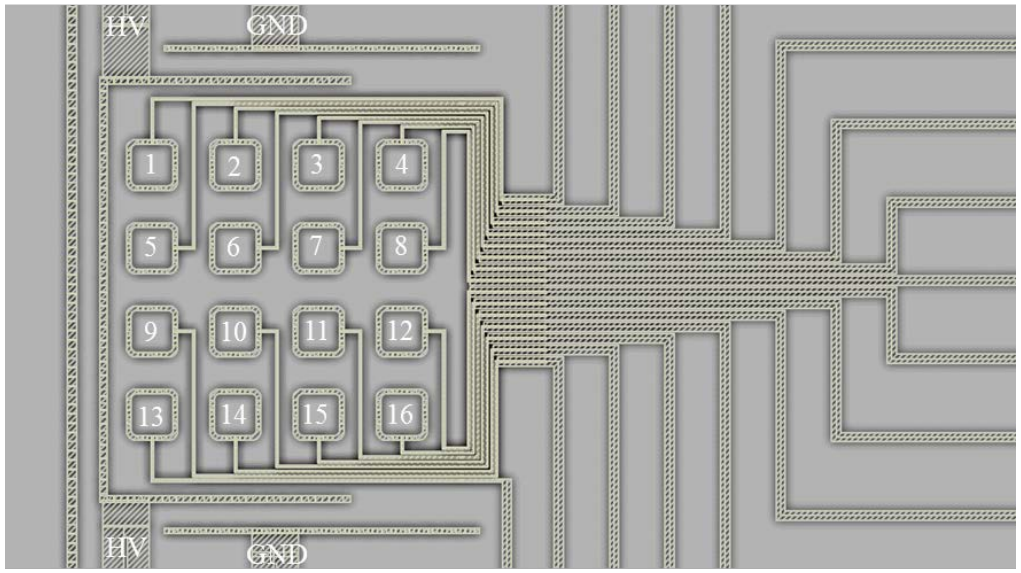

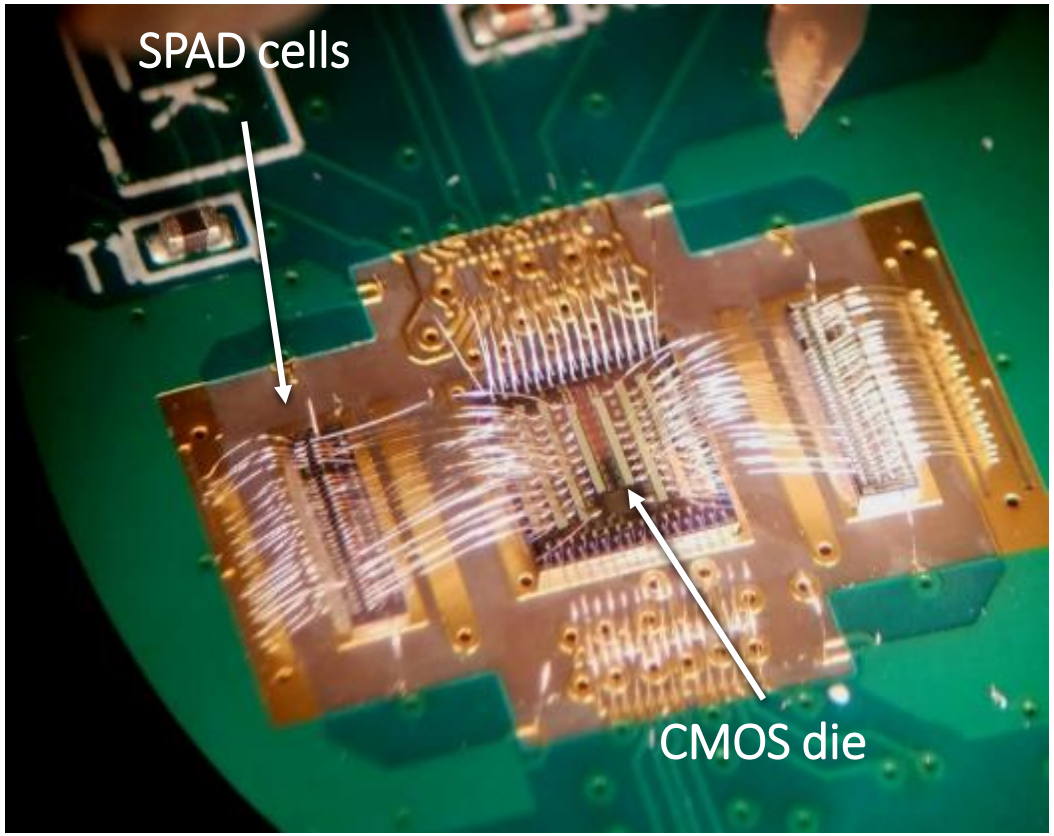

VUV Sensitivity Enhancement: Contact Frédéric Vachon #613

frederic.f.vachon@usherbrooke.ca

- Delta-doping: surface energy band engineering to cause electron drift
- Increase internal quantum efficiency (▲)
- Delta doping + anti-reflective coating (+) : major PDE improvement in VUV range
- UdeS-TRIUMF-Lawrence Berkeley Lab collaboration « Towards high efficiency single VUV photon detectors »

Arthur B. McDonald
Canadian Astroparticle Physics Research Institute

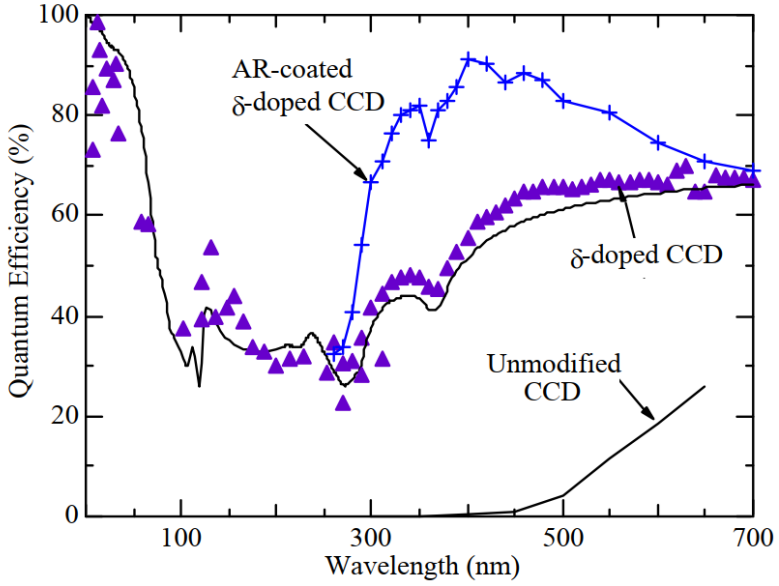

Delta-doped back-illuminated CMOS imaging arrays: progress and prospects.
M.E. Hoenk (In Infrared Systems and Photoelectronic Technology IV 2009)

Only electrons absorbed too close to surface get lost

Electrons in interface states are trapped at the surface, thus reducing noise

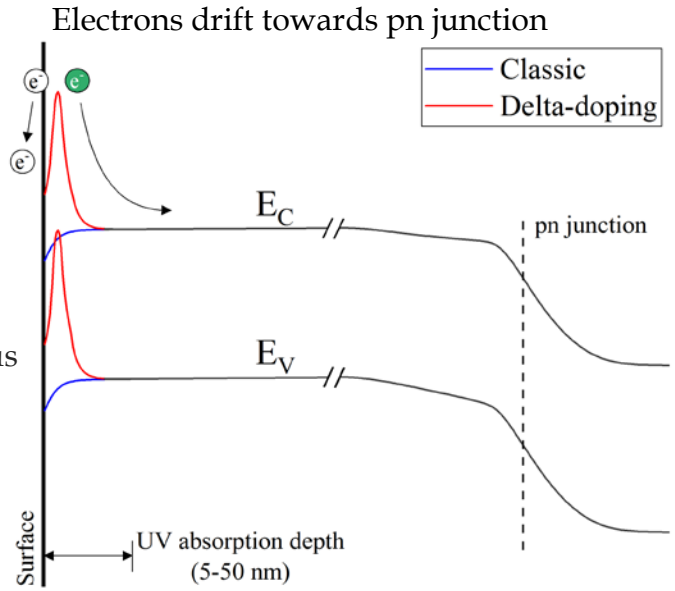

Simulation of energy bands with delta-doping

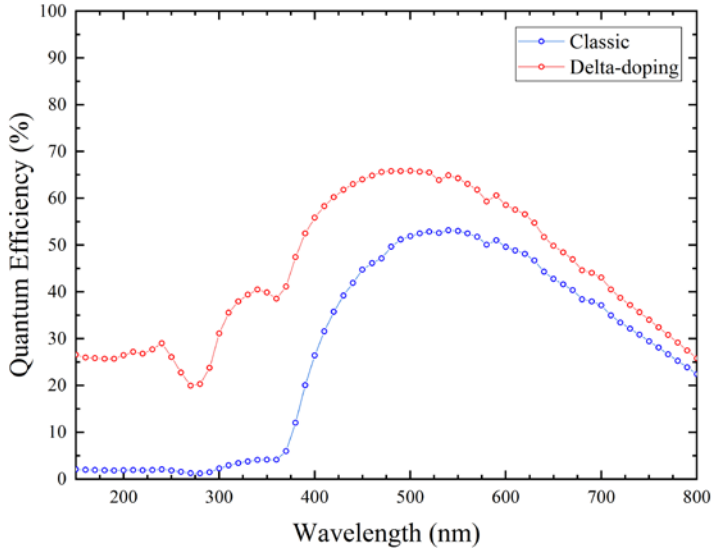

Simulation of SPAD quantum efficiency with delta-doping

Photon-to-Digital Converter : CMOS Readout

UNIVERSITÉ DE SHERBROOKE

3D Photon-to-Digital Converters : CMOS Readout

1. High resolution timing applications

- Applications: Quantum key distribution, PET, CT
- Time-to-digital converter target: 5 ps resolution, sub 5 ps RMS jitter (**measurements ongoing and very promising**)
- CMOS 65 nm

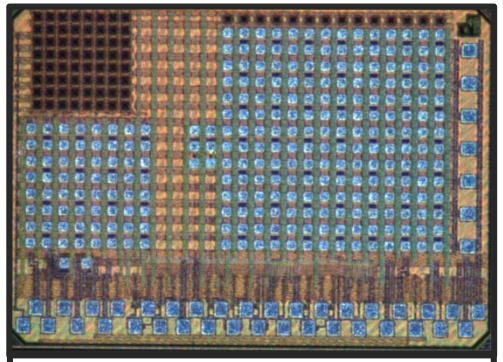

65nm CMOS high timing resolution readout (1.6 mm × 2.2 mm)

2. Low power, large area experiments

- Applications: Neutron Imaging and Noble liquids instrumentation
- CMOS 180 nm
- Rev. 2: Jan 2022

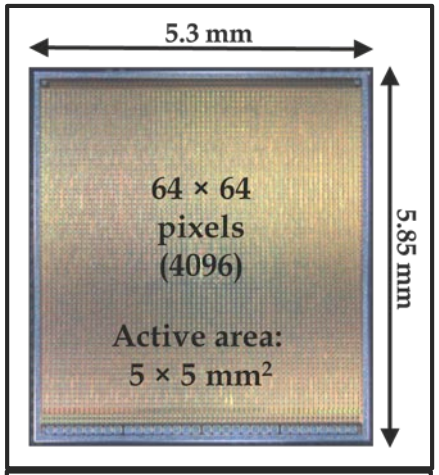

180 nm CMOS readout for low power, large area systems

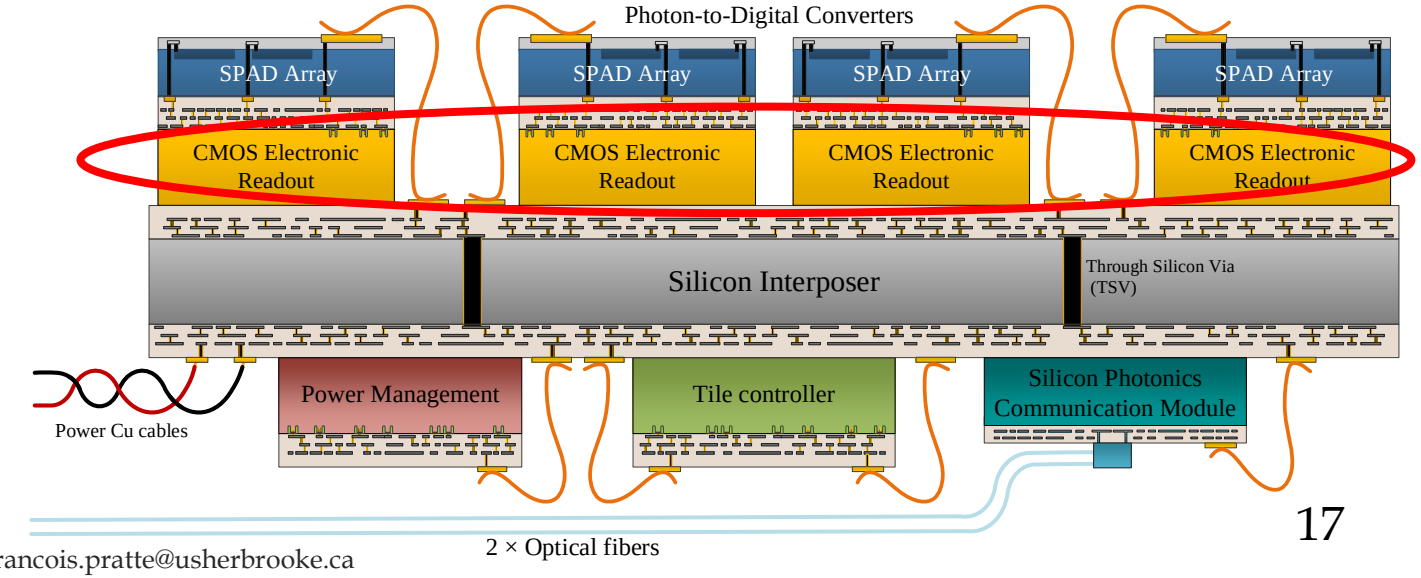

jean-francois.pratte@usherbrooke.ca

Photon-to-Digital Converter : CMOS Readout

Microelectronic Readout Integrated Circuit for Precise Single Photon Timing Resolution

UNIVERSITÉ DE SHERBROOKE

ASIC Overview (originally for PET)

- TSMC 65 nm CMOS (LP)
- 16 × 16 pixels in 1.1 × 1.1 mm^2
- Jitter: 18 ps RMS for 256 pixels
- F. Nolet, A 256 Pixelated SPAD readout ASIC with in-Pixel TDC and embedded digital signal processing for uniformity and skew correction,NIMA, https://doi.org/10.1016/j.nima.2019.162891.
- W. Lemaire, Embedded time of arrival estimation for digital silicon photomultipliers with in-pixel TDCs, NIMA, https://doi.org/10.1016/j.nima.2020.163538.

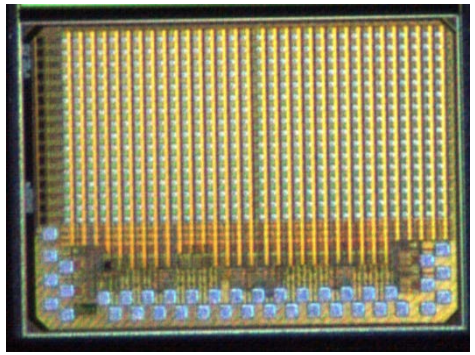

Rev 1. 2019

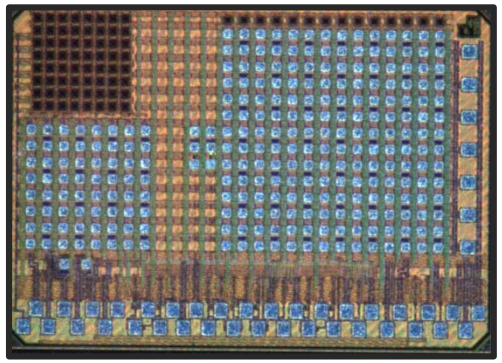

Rev 2. 2021

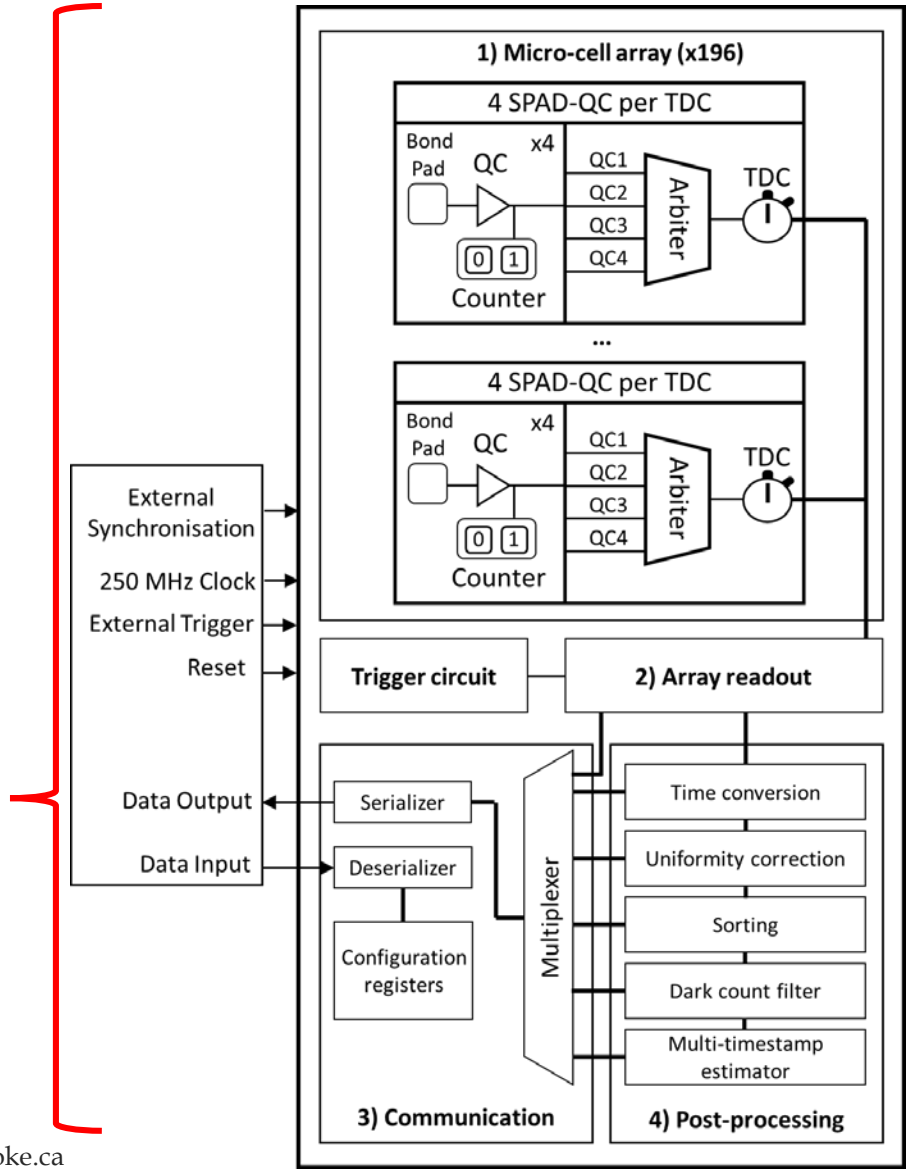

jean-francois.pratte@usherbrooke.ca

Time-to-Digital Converter

Nolet, F. et al. *Electron. Lett.* (2020)

Time-to-digital converter

- CMOS 65 nm
- 8x Vernier ring-oscillator-based TDC
- 5.5 ps RMS timing jitter (1 channel)
- 22 µW @ 1 Mevents/s

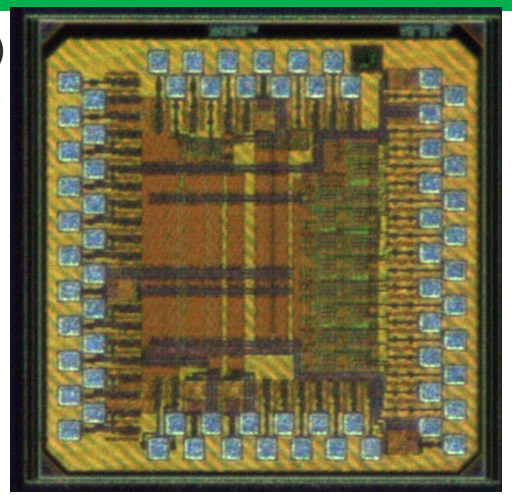

ZYNQ

Data acquisition system:

- 8 input channels
- Common trigger for all channels in start-stop mode
- 2x 8-channel time-to-digital converters
- Leading and falling edge timestamping for TOF and TOT measurements
- Mezzanine with ZYNQ and gigabit Ethernet
- On-board calibration

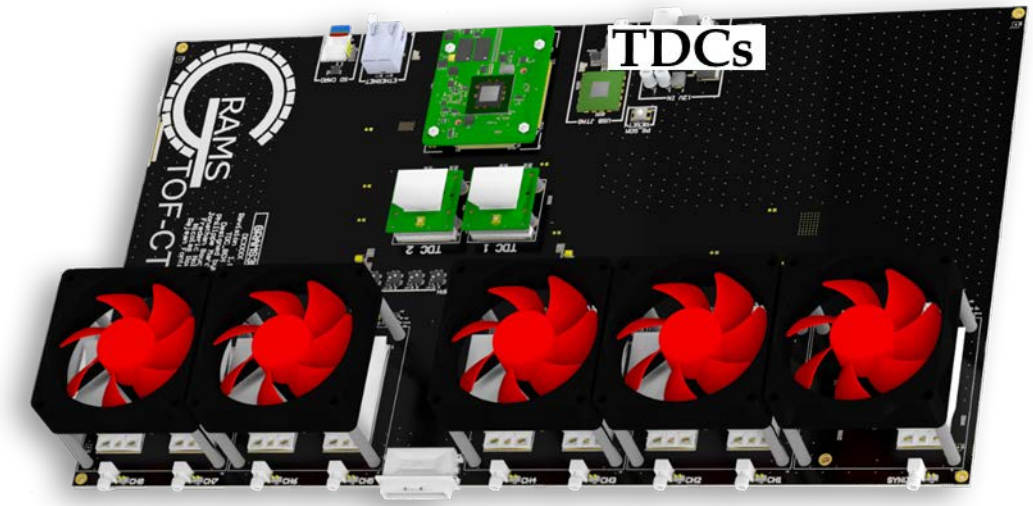

Channel inputs

Trigger input

Photon-to-Digital Converter : CMOS Readout

Microelectronic Readout Integrated Circuit for Low Power, Large area and Analog SiPM Replacement

UNIVERSITÉ DE SHERBROOKE

CMOS: Low Power PDC Readout - Overview

- TSMC 180 nm BCD process
- 5 x 5 mm^2 active area
- 64 x 64 pixels (4096)
- 78 µm pixel pitch
- 3-side buttable (for tiles)
- Digital-on-Top design flow

One row of 61 2D SPADs for functional testing

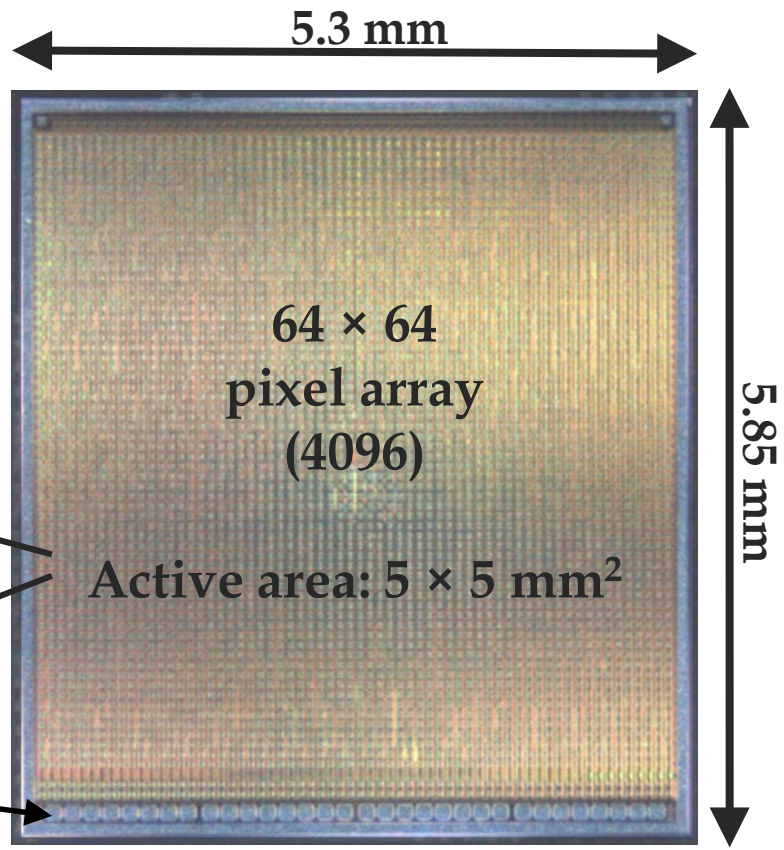

Quenching circuit and 3D interconnect

A single pixel

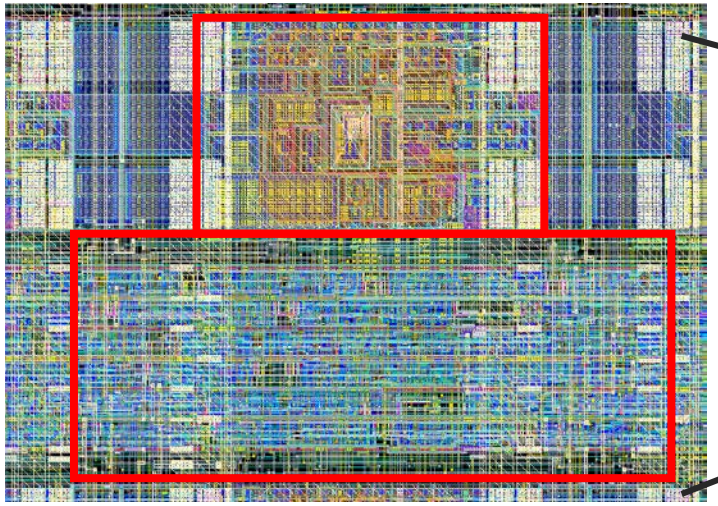

Digital signal processing

32 I/O pads in single row

Low Power CMOS PDC Readout – 3 Outputs

1. Flag
   - Timestamped with an external TDC (TR < 100 ps RMS)
   - Used to trigger digital sum read request and discriminate dark count

2. Digital Sum
   - Executed on request (asynchronous) or
   - Sampling from 10 ns to 10 µs (128 bin FIFO)

3. Analog Monitor
   - Amplitude proportional to number of triggered pixels
   - Lower output capacitance than analog SiPM

Pixel functionnalities:
- Enable for each SPAD
- Adjustable hold off (afterpulse)
- Embedded testing in each pixel

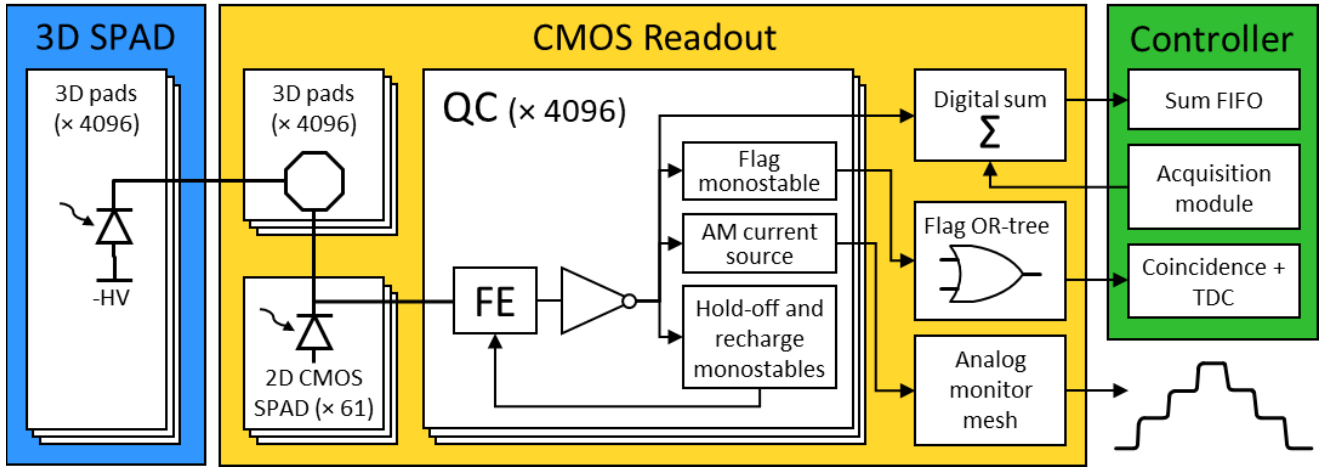

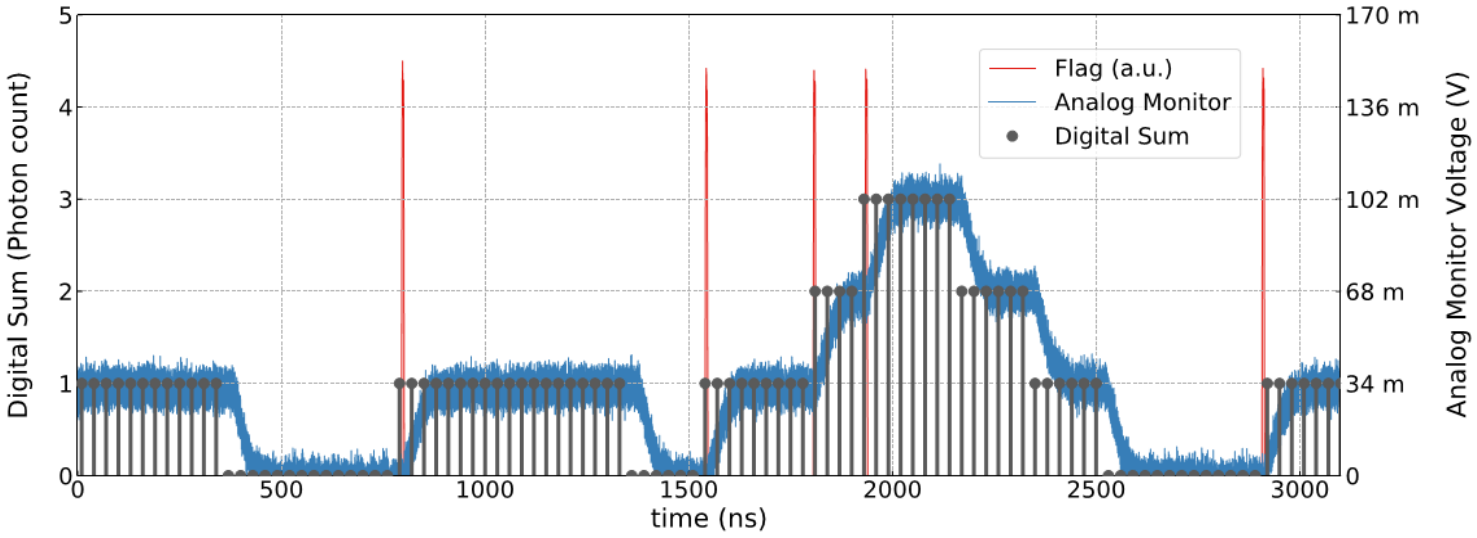

jean-francois.pratte@usherbrooke.ca

Photon Detection Module : Silicon Interposer

UNIVERSITÉ DE SHERBROOKE

Photodetection Module – Silicon Interposer: K. Deslandes #512

- Coefficient of thermal expansion matching between components:
  → Cryogenic + space instrumentation
- Silicon-based « PCB »
- Collaboration with IZM Fraunhofer (Berlin)
- 8 redistribution layers
- 8″ wafer
- Initial results conclusive
- Full stack interposer testing summer 2021

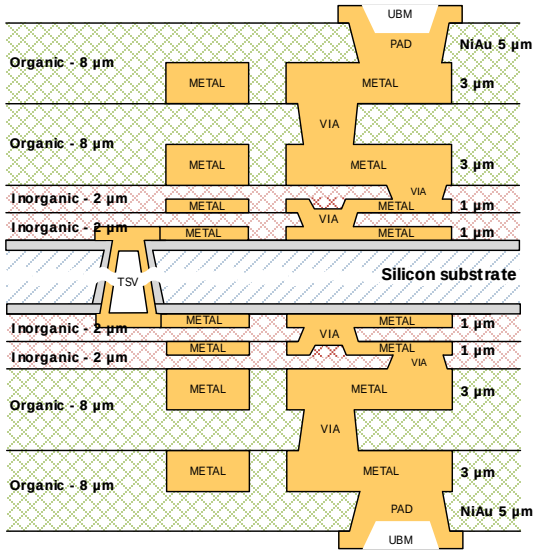

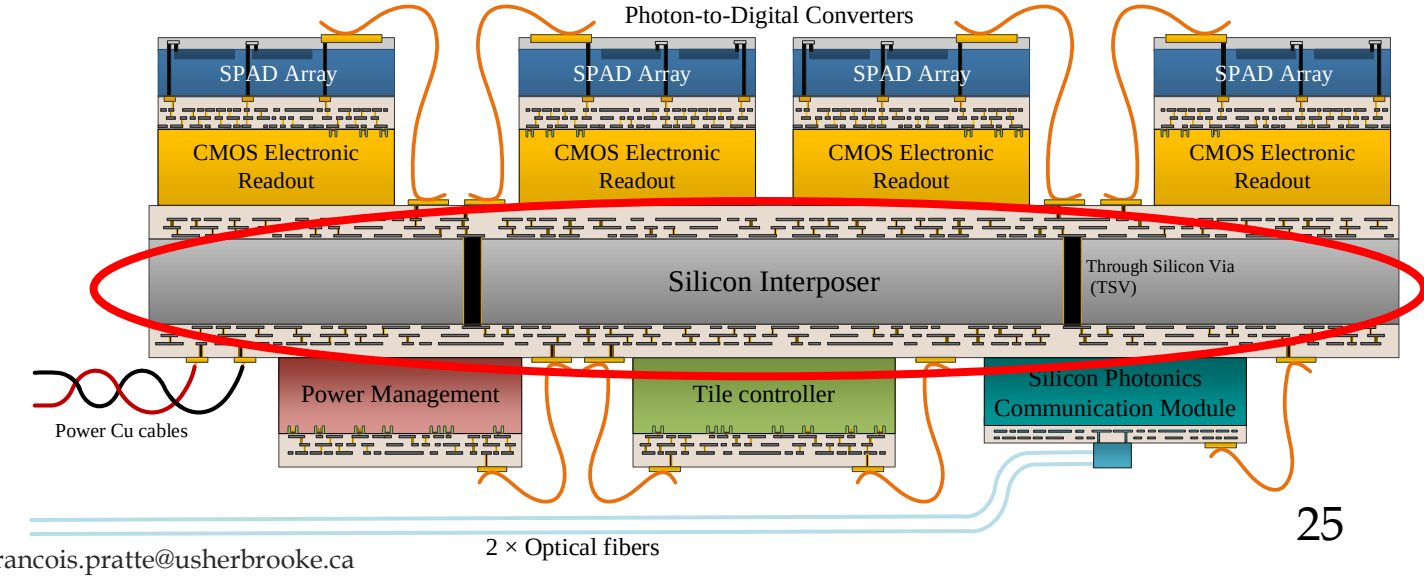

Interposer prototype: Characterization run

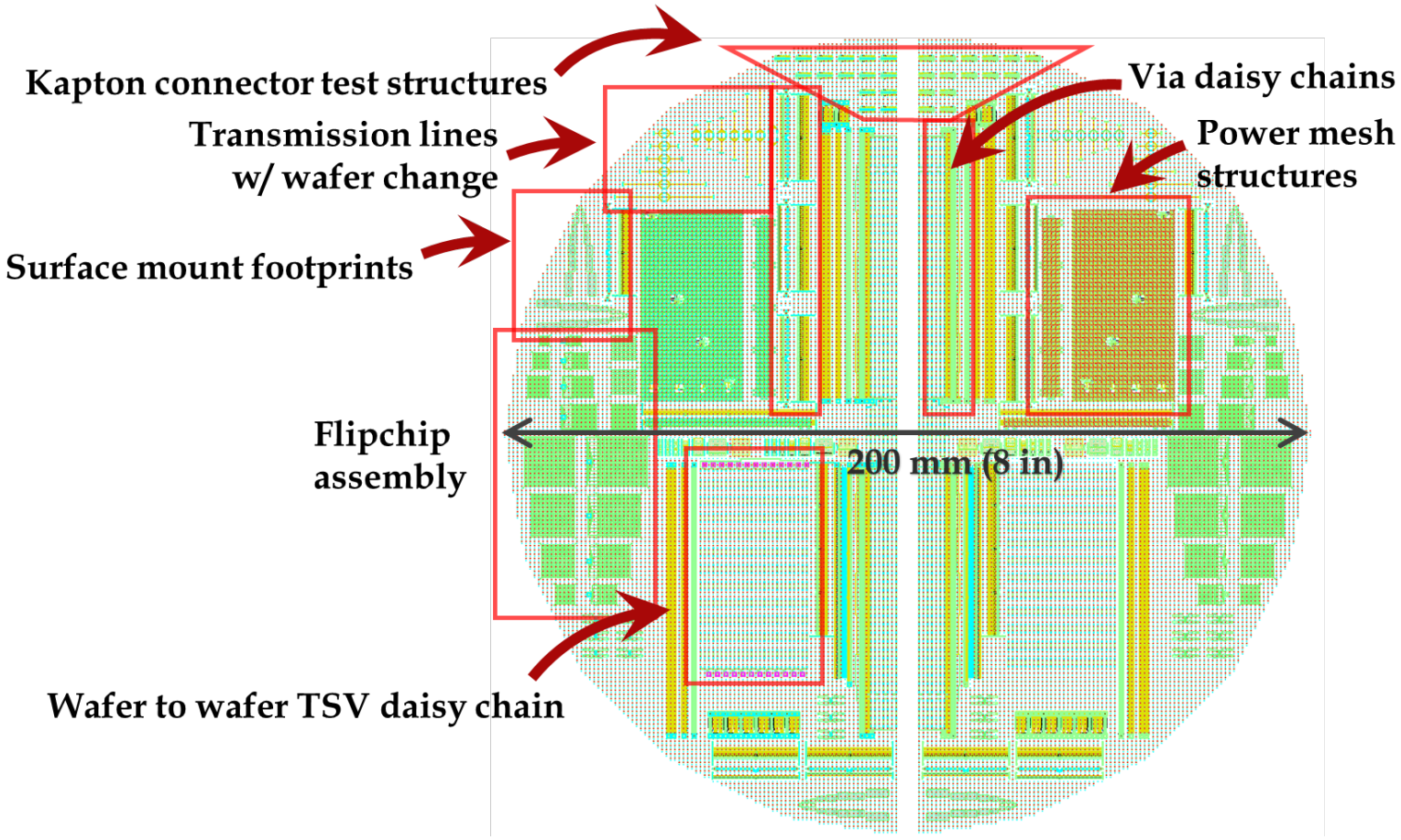

Test structures on the wafer

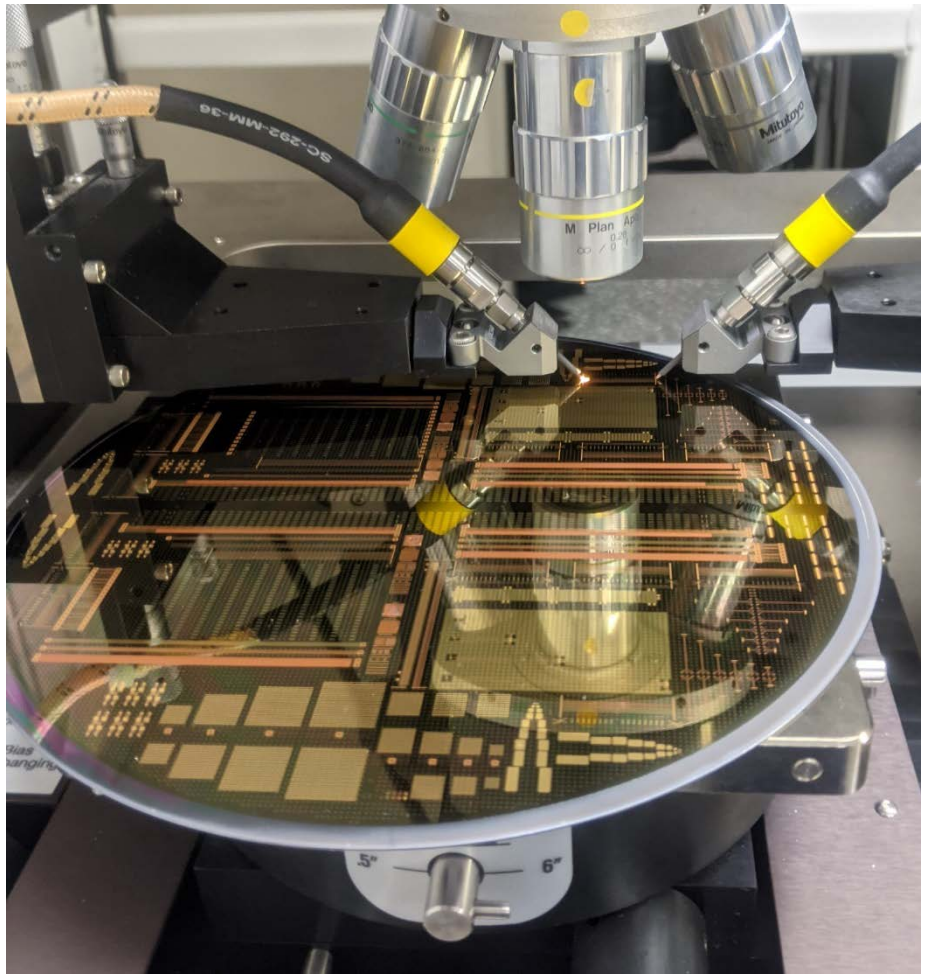

RF measurement over 8″ wafer (4 RDL)

Photon Detection Module : Silicon Photonics-Based Low Power Communication Interface

UNIVERSITÉ DE SHERBROOKE

Photodetection Module – Silicon Photonics Comm Module

- Cryogenic operation
  - Noble liquid experiments
- One laserless communication module per photodection module

  → Laser only at the DAQ → Low power at the photodection module
- Optical fibers: resistant to EMI and ground loops

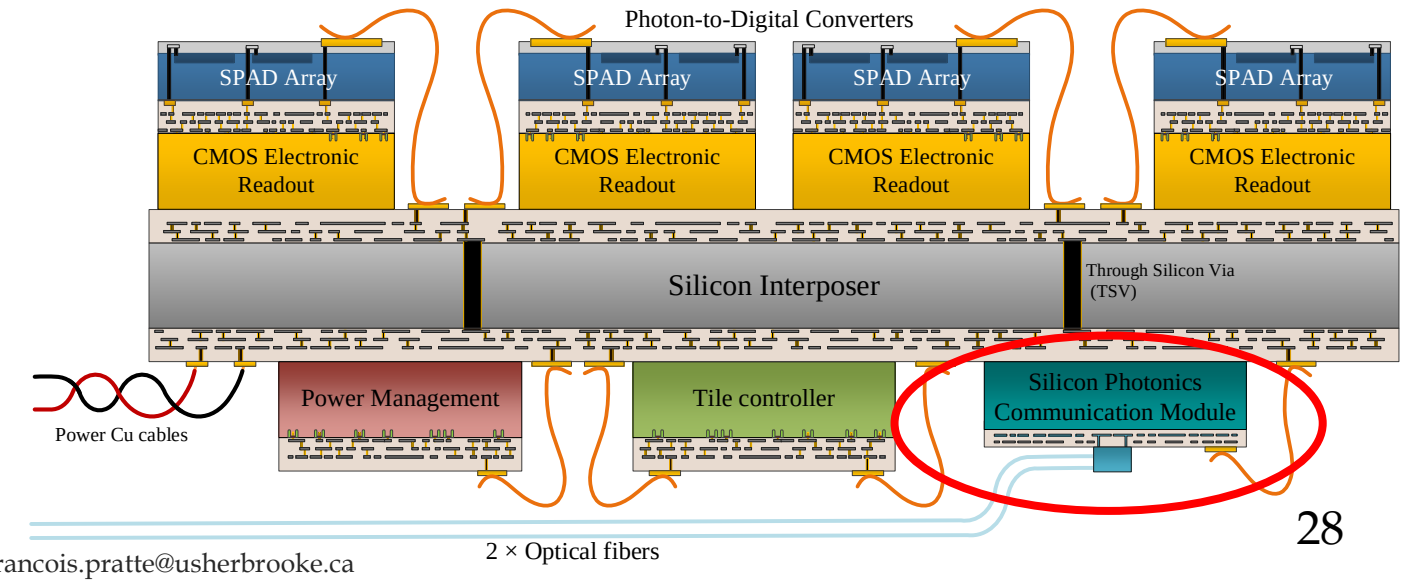

Silicon Photonics Data Acquisition and Control System

- Based on passive optical networks
- λ1:
  - Bits to program the module
- λ2:
  - Down: Clock signal
  - Up: Data
- Tiles can be multiplexed to save on the number of fibers and hence feedthroughs

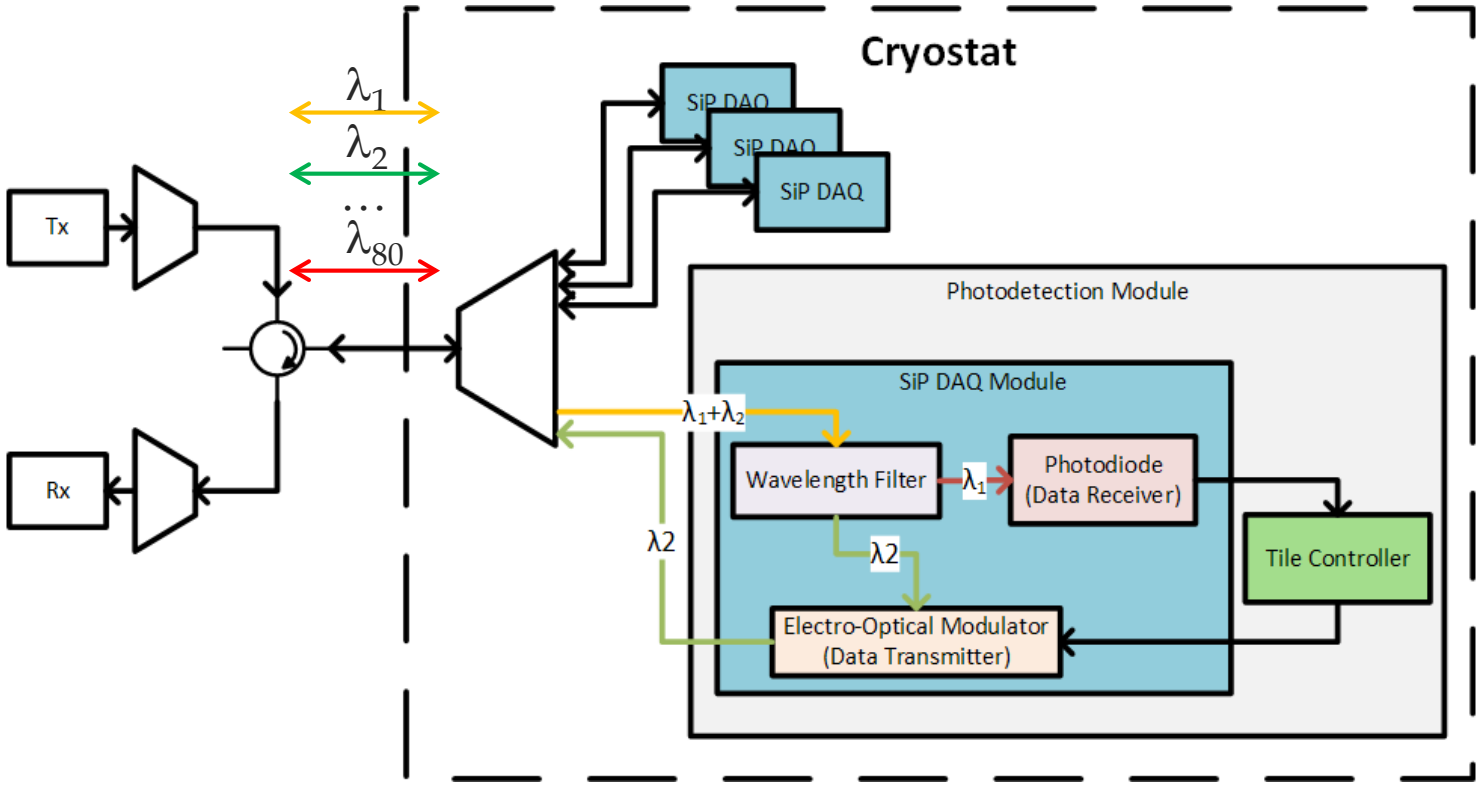

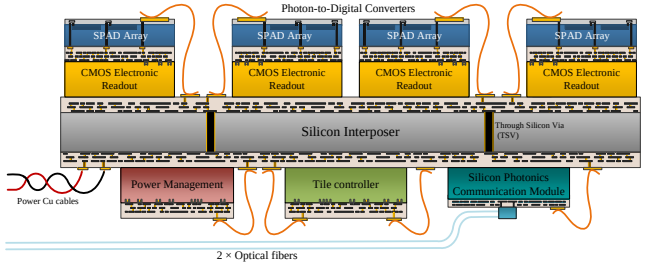

Standard ITU-T G.694.1

Silicon Photonics Data Acquisition and Control System

1. Photonic Wirebonds
2. Michelson Modulator 1:
   - Slow Thermal Phase Shifter
   - Fast PN Junction Phase Shifter
3. Michelson Modulator 3:
   - Slow PN Junction Phase Shifter
   - Fast PN Junction Phase Shifter
4. Germanium Photodiode
5. Michelson Interferometer (Passive)
6. Grating couplers (Optical I/O)

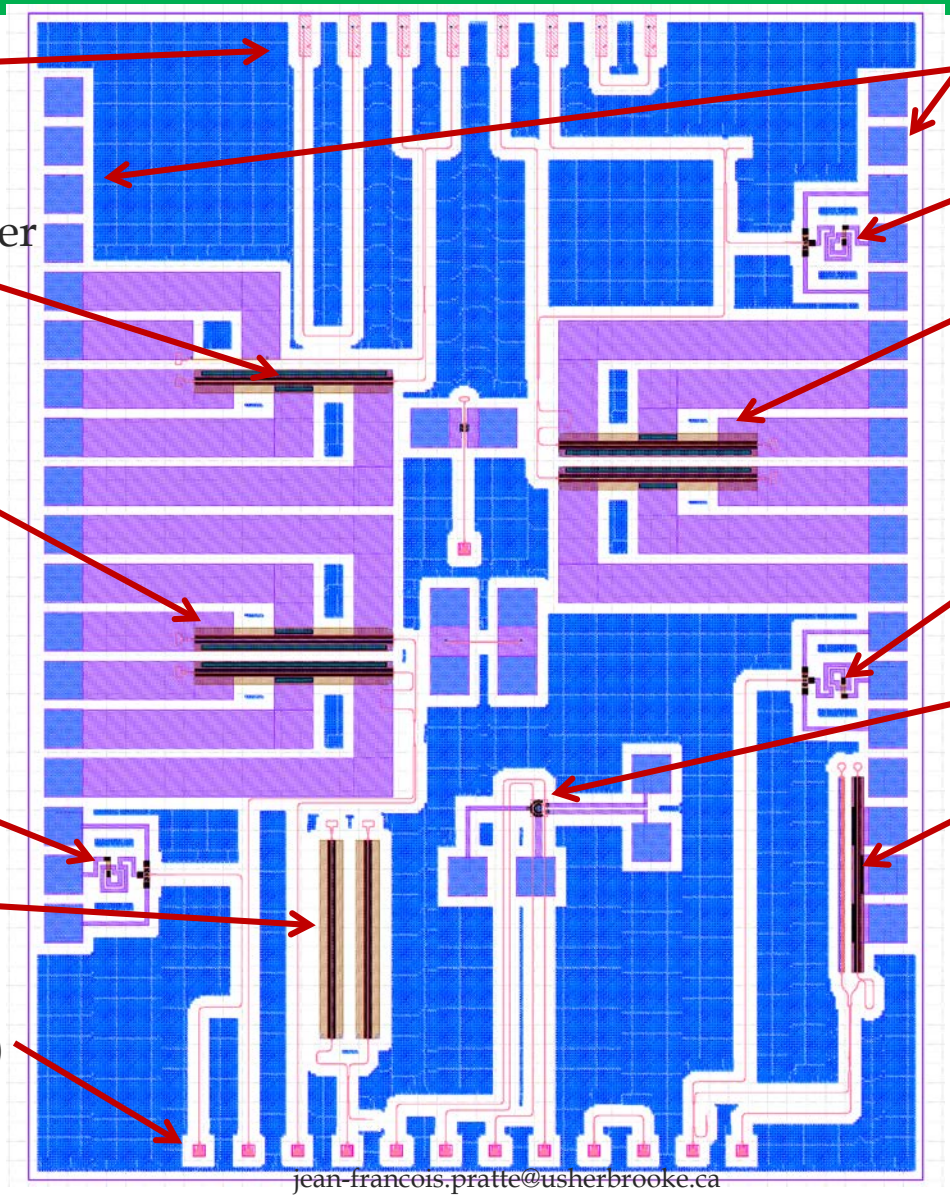

7. Electrical I/O
8. Germanium Photodiode
9. Michelson Modulator 2:
   - Slow PN Junction Phase Shifter
   - Fast PN Junction Phase Shifter
10. Germanium Photodiode
11. Micro-Ring Resonator
12. Michelson Interferometer
    - Fast PN Junction Phase Shifter

$2.3 \times 3\ mm^2$

jean-francois.pratte@usherbrooke.ca

65 nm CMOS SPAD and Quenching Circuit

6.29 ps FWHM Single Photon Timing Resolution and Laser Beam Monitoring Device

UNIVERSITÉ DE SHERBROOKE

Single SPAD Module based on CMOS 65 nm Architecture

- Single input (12 V) and single output (0-1 V)
- 17.6 um ∅, p+/n-well
- Vbd/Vov = 10 V/2.5 V (25%)
- avg. DCR/AP (deadtime) = 100 kcps / 5% (60 ns)
- PDE = 1% (820 nm) / 5% (410 nm)
- **Single photon timing resolution (SPTR): 6.29 ps FWHM**

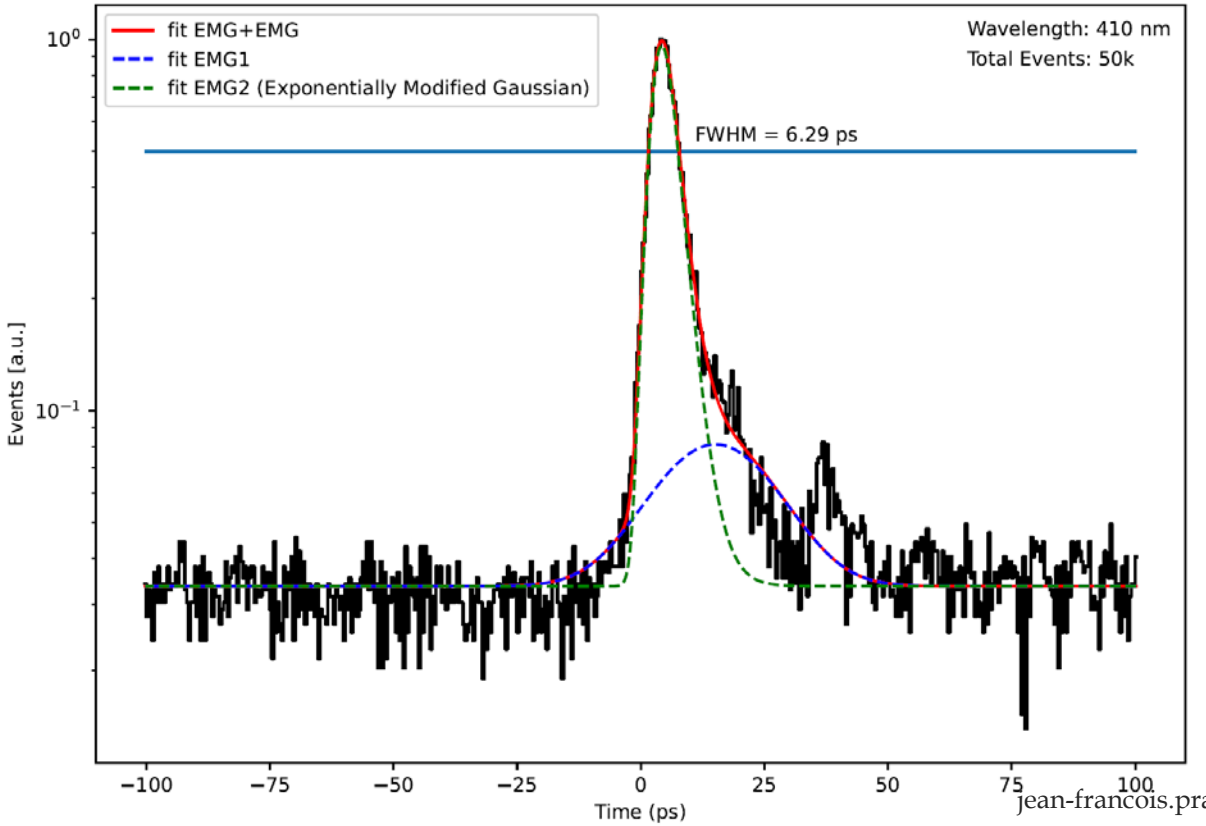

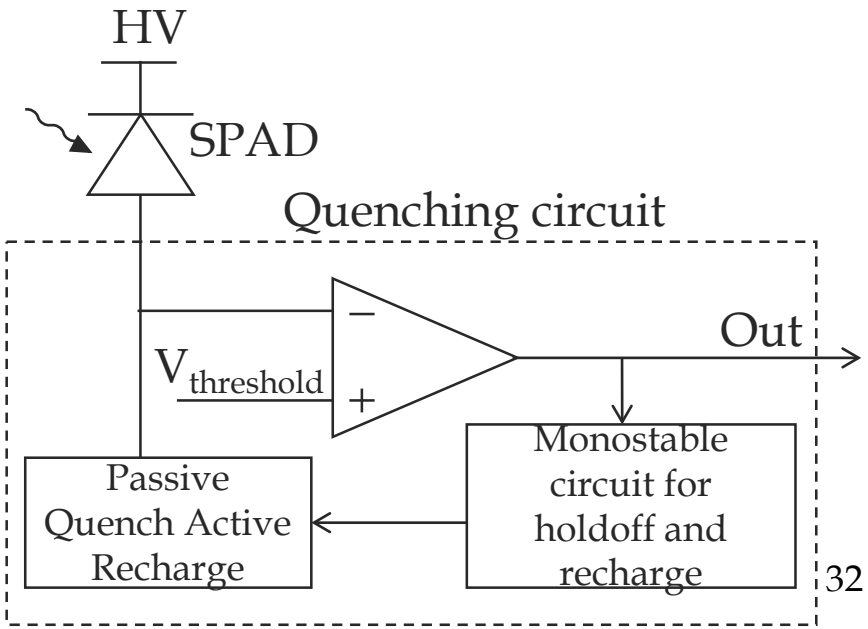

jean-francois.pratte@usherbrooke.ca

Single Photon Timing Resolution Test Setup

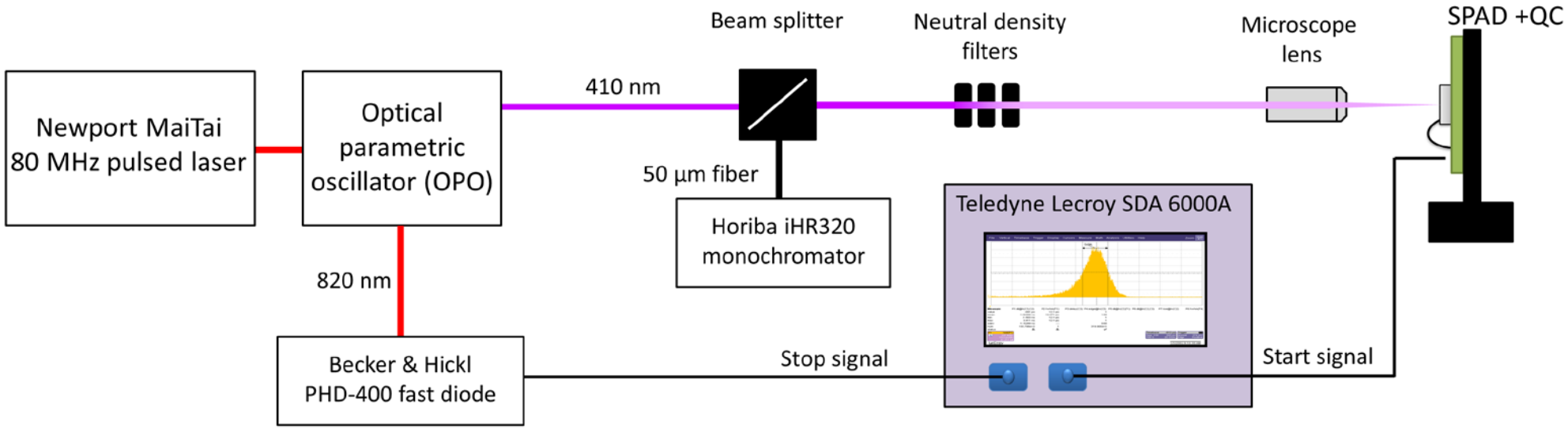

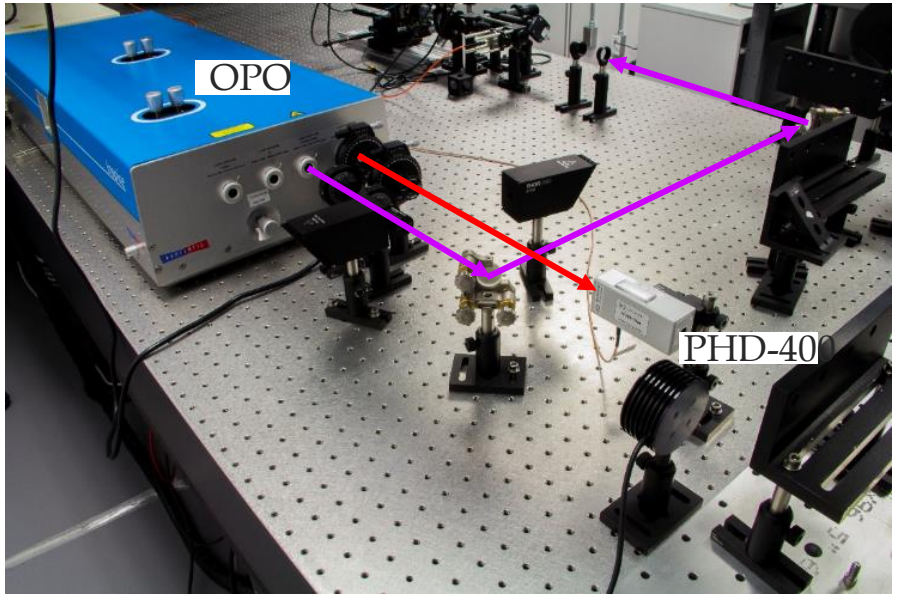

Maitai
- Pulse rate: 80 MHz
- Pulse width: < 100 fs
- Wavelength: 820 nm (690-1040 nm)

OPO outputs
1. 820 nm (690-1040 nm pump laser)
2. 410 nm (345-520 nm) + … still some 820 nm!
3. (930-2500 nm)
4. (490-750 nm)

jean-francois.pratte@usherbrooke.ca

Single Photon Timing Resolution: No Filter

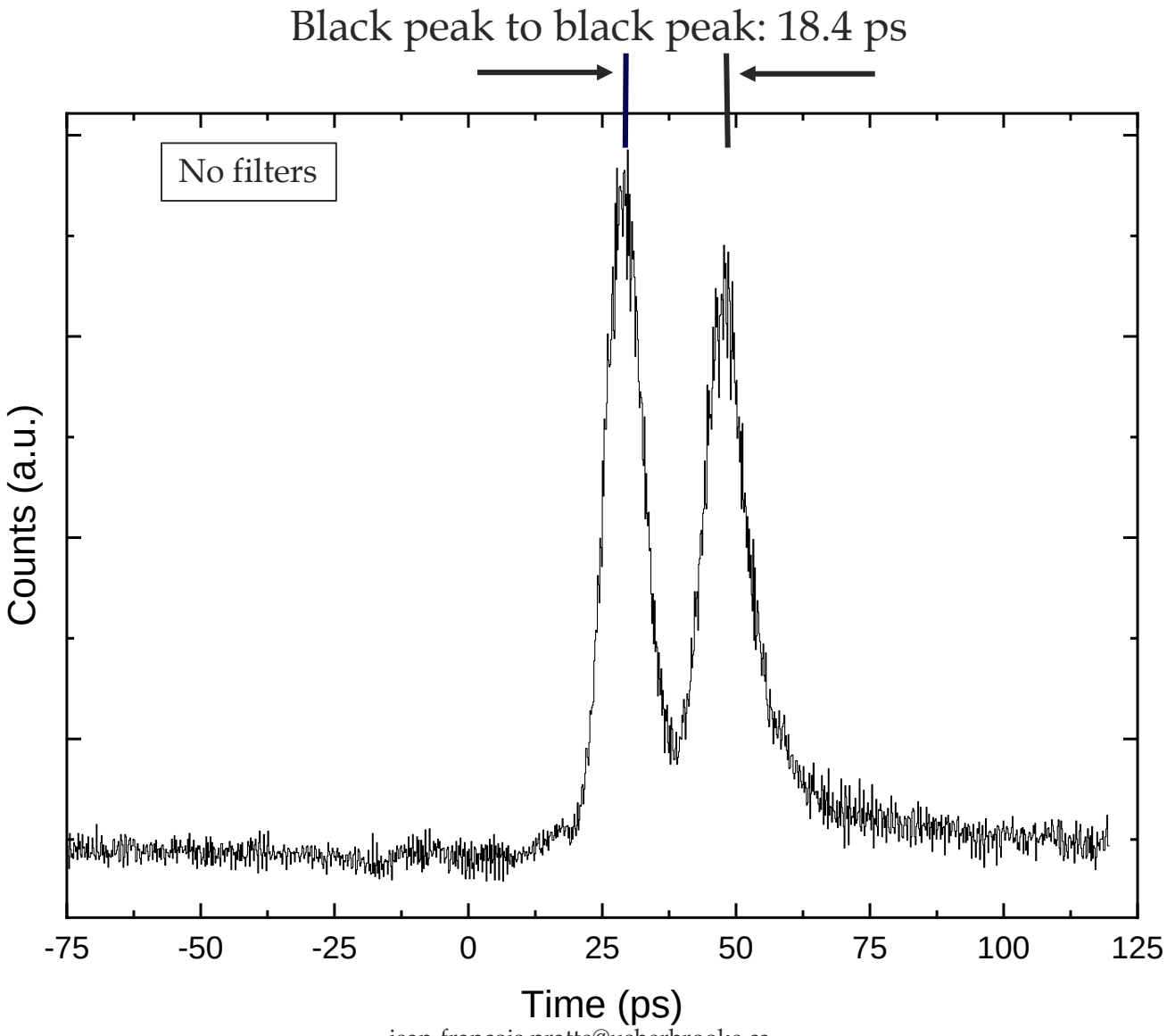

jean-francois.pratte@usherbrooke.ca

Single Photon Timing Resolution: Low Pass Filter

Black peak to blue peak: 4.6 ps → ~ lens filter thickness

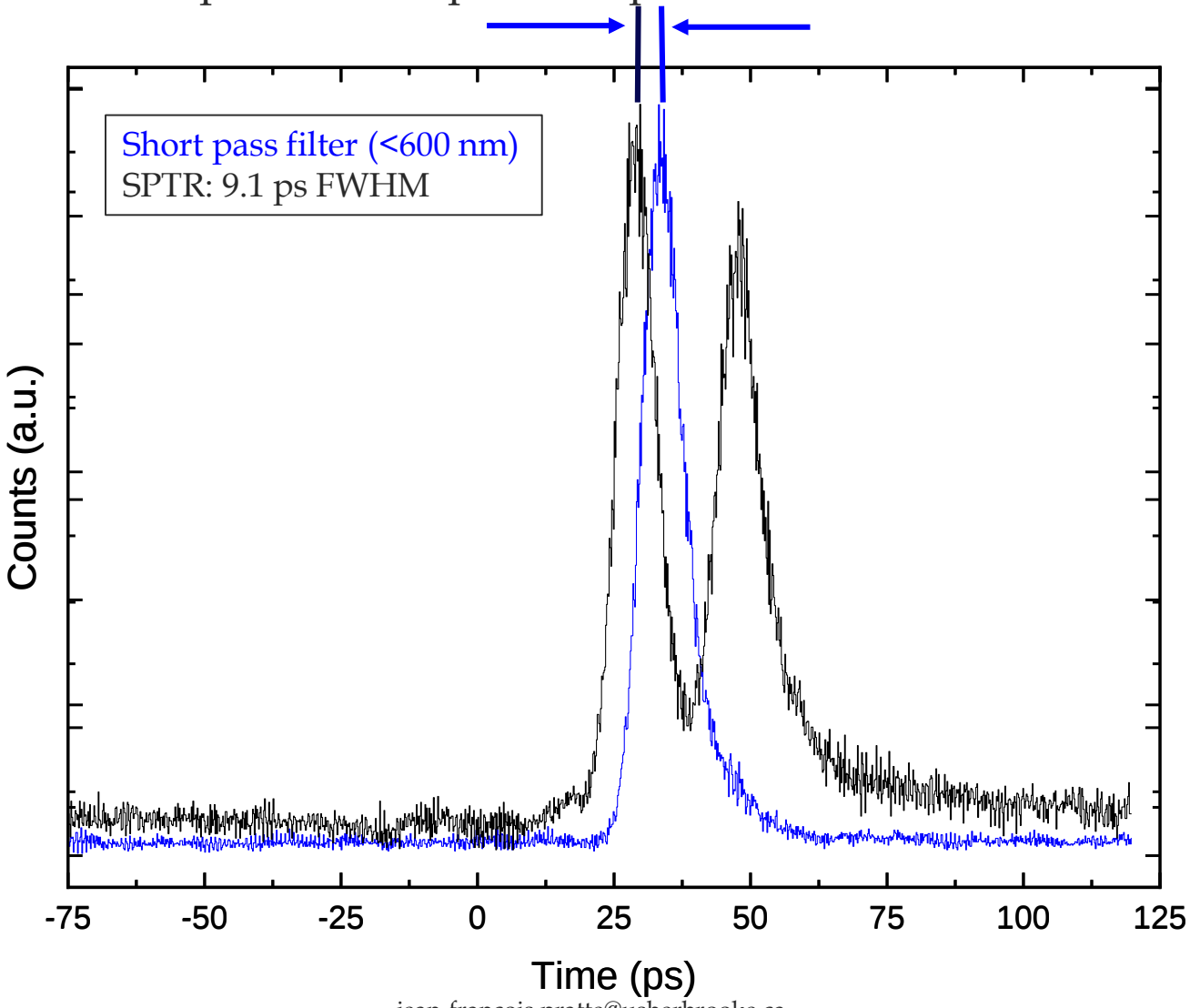

jean-francois.pratte@usherbrooke.ca

Single Photon Timing Resolution: High Pass Filter

Black peak to red peak: 3.8 ps → ~ lens filter thickness

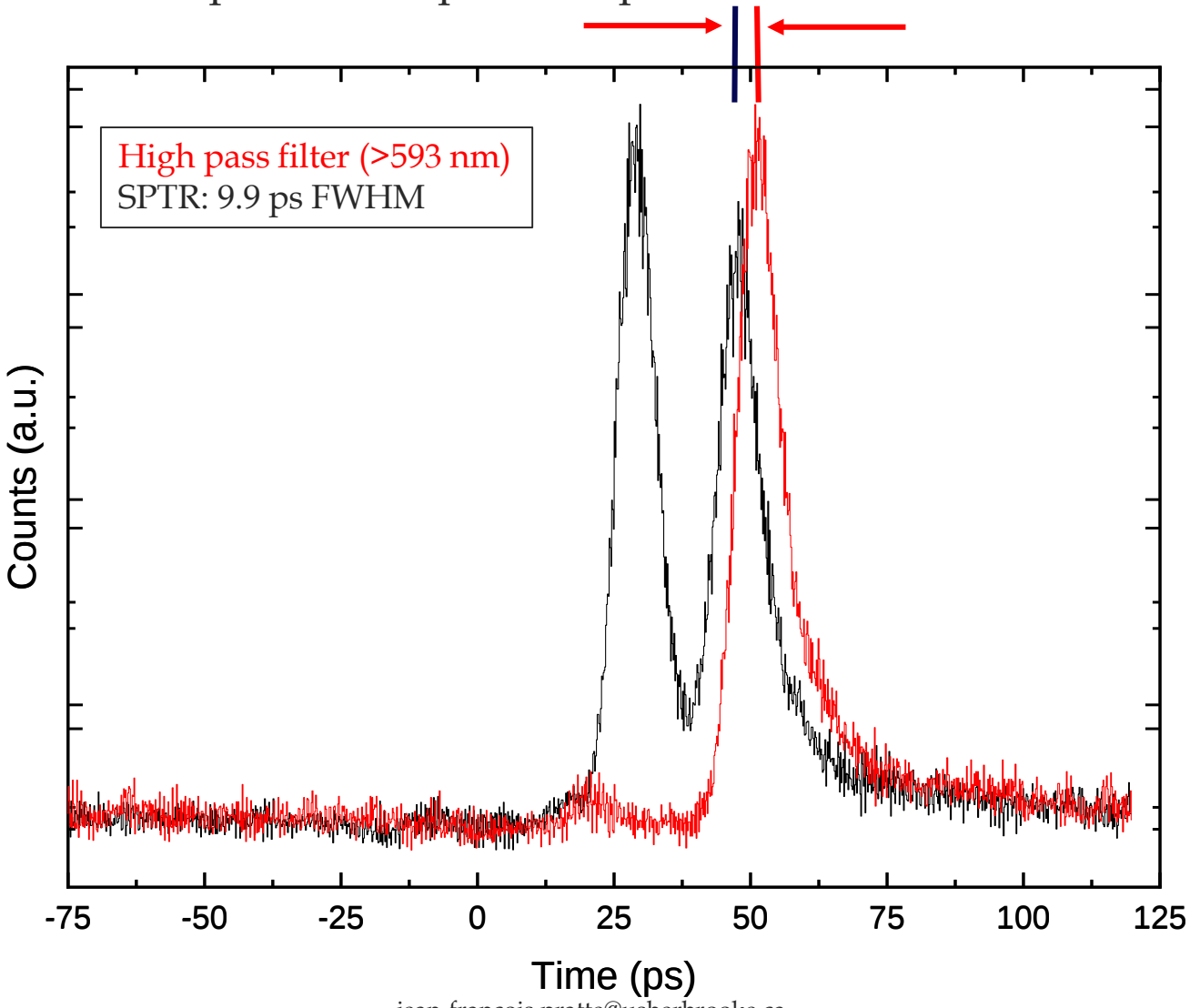

jean-francois.pratte@usherbrooke.ca

65 nm CMOS SPAD and Quenching Circuit Module

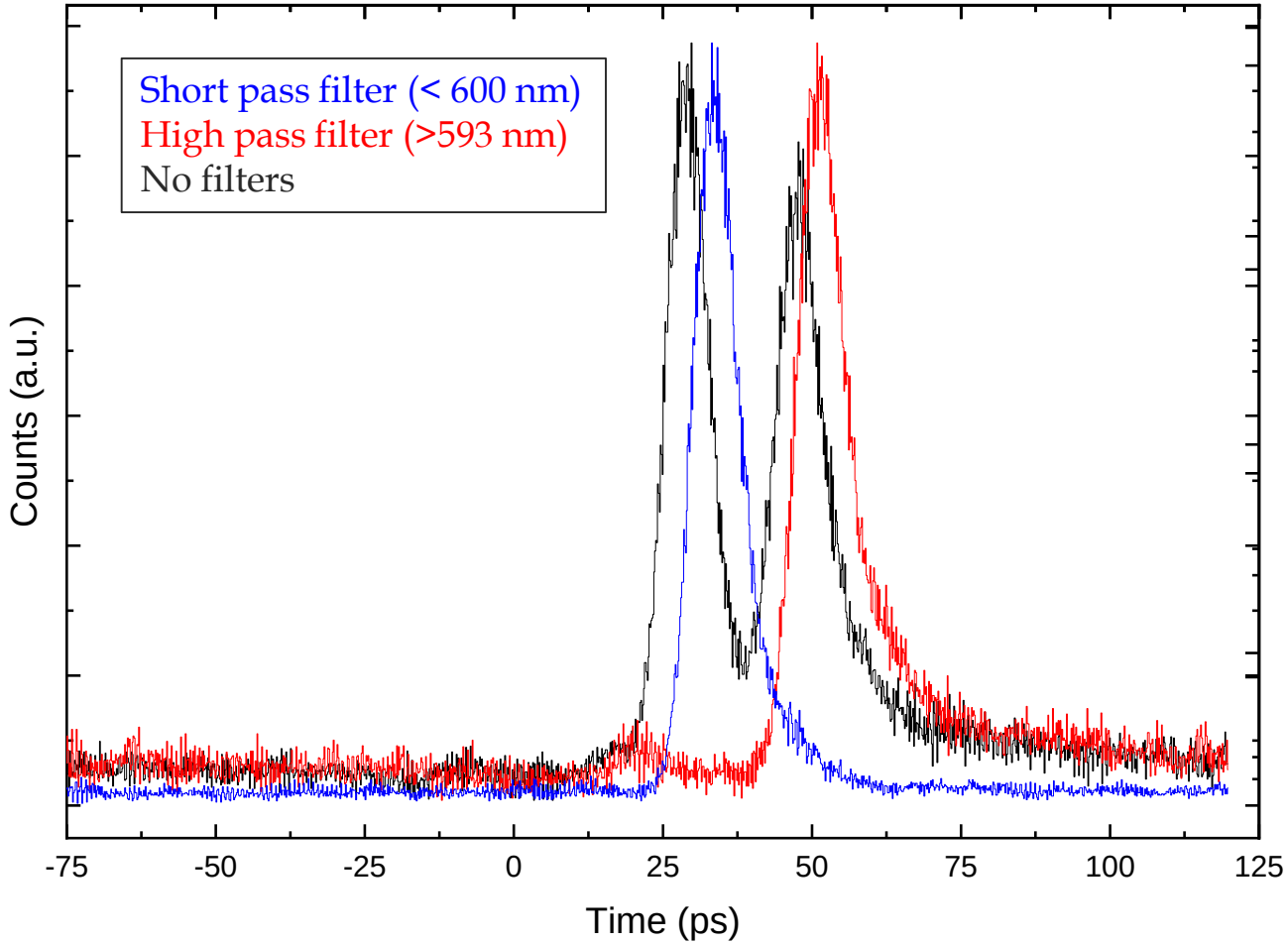

Nice ultraprecise and simple laser beam monitoring system

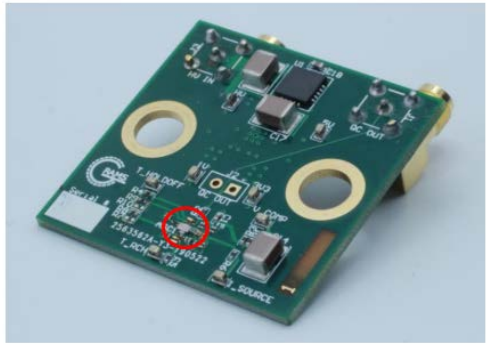

Conclusion

- Single photon instrumentation plays a key role in various fields.
- 3D Photon-to-digital converters have advantages over analog SiPM and can be tailored to the experiments.
- Silicon interposer has great potential for low background experiments.
- Silicon photonics communication enables:
  - minimize EMI + ground loops;
  - optical fiber bandwidth → can mux many readout in one fiber and minimize the number of feedthroughs in a cryostat.
- Precise timing systems:
  - 8 channel benchtop TDC module soon available with ~10 ps FWHM resolution;
  - SPAD + readout : handy time-based laser monitoring system with sub 10 ps FWHM SPTR
- Looking for collaborators to work on <u>power management</u> unit and <u>full custom tile controller.</u>

Selected Publications from our Team

- **3D Photon-To-Digital Converter for Radiation Instrumentation: Motivation and Future Works. (2021). Pratte, J.-F.; Nolet, F.; Parent, S.; Vachon, F.; Roy, N.; Rossignol, T.; Deslandes, K.; Dautet, H.; Fontaine, R.; Charlebois, S.A. *MDPI Sensors*. 21, 598. https://doi.org/10.3390/s21020598**
- **Roadmap toward 10 ps time-of-flight PET challenge.** (2020). Lecoq, P.; Morel, C.; Pratte, J-F. et al. *Physics in Medicine and Biology*. Institute of Physics and engineering in Medicine.
- **22 µW, 5.1 ps LSB, 5.5 ps RMS jitter Vernier time-to-digital converter in CMOS 65 nm for single photon avalanche diode array.** (2020). Nolet, F.; Roy, N.; Carrier, S.; Bouchard, J.; Fontaine, R.; Charlebois, S. A.; Pratte, J-F. *Electronics Letters*. 56(9): 424-426.
- **Embedded time of arrival estimation for digital photomultipliers with in-pixel TDCs.** (2020). Lemaire, W.; Nolet, F.; Dubois, F.; Corbeil Therrien, A.; Pratte, J-F.; Fontaine, R. *Nuclear Inst. And Methods in Physics Research, A*. 163538
- **Dark Count Resilient Time Estimators for Time-of-Flight PET.** (2020). Lemaire, W.; Corbeil Therrien, A.; Pratte, J-F.; Fontaine, R. *IEEE Transactions on Radiation and Plasma Medical Sciences*. 4(1): 24-29
- **Measuring count rates free from correlated noise in digital silicon photomultipliers.** Vachon, F., Parent, S., Nolet, F., Dautet, H., Pratte, J. F., & Charlebois, S. A. (2020). Measurement Science and Technology.
- **A 256 Pixelated SPAD Readout ASIC with in-Pixel TDC and Embedded Digital Signal Processing for Uniformity and Skew Correction.** (2019). Nolet, F.; Lemaire, W.; Dubois, F.; Carrier, S. G.; Samson, A.; Charlebois, S. A.; Fontaine, R.; Pratte, J-F. *Nuclear Inst. And Methods in Physics Research, A*. 162891
- **Record breaking timing resolution with a room temperature single photon detector - Two photons timing resolution of record-breaking low jitter SPADs measured by Time Tagger Ultra HiRes.** (2019), Application Note Si-0004. M. Kolarczik, H. Fedder, M. Wick, F. Nolet, S. Parent, N. Roy, and J.-F. Pratte
- **Single Photon Avalanche Diodes and Vertical Integration Process for a 3D Digital SiPM using Industrial Semiconductor Technologies.** (2nd position NSS student competition – oral prensentation). (2018). Parent, S.; Côté, M.; Vachon, F.; Groulx, R.; Martel, S.; Dautet, H.; Charlebois, S. A.; Pratte, J-F. *2018 IEEE NSS-MIC Conference Record*. 2018 IEEE NSS-MIC, Sydney, Australia.
- **Energy discrimination for positron emission tomography using the time information of the first detected photons.** (2018). Corbeil Therrien, A.; Lemaire, W.; Lecoq, P.; Fontaine, R.; Pratte, J-F. *Journal of Instrumentation*. 13(1): p01012.

Selected Publications from our Team

- **Quenching Circuit and SPAD Integrated in CMOS 65 nm with 7.8 ps FWHM Single Photon Timing Resolution.** (2018). Nolet, F.; Parent, S.; Roy, N.; Mercier, M.-O.; Charlebois, S. A.; Fontaine, R. ; Pratte, J-F. *MDPI - Instrument - Special Issue Advances in Particle Detectors and Electronics for Fast Timing*. 2(4)
- **Digital SiPM channel integrated in CMOS 65 nm with 17.5 ps FWHM single photon timing resolution**. (2017). Nolet, F. and Dubois, F. and Roy, N. and Parent, S. and Lemaire, W. and Massie-Godon, A. and Charlebois, S. A and Fontaine, R. and Pratte, J.-F. *Nuclear Instruments and Methods in Physics Research Section A,* 912: 29-32.
- **TDC Array Trade-Offs in Current and Upcoming Digital SiPM Detectors for Time-of-Flight PET**. (2017). Tetrault, M.-A.; Lemaire, W.; Corbeil-Therrien, A.; Fontaine, R.; Pratte, J.-F. *IEEE Transactions on Nuclear Science*. 64(3): 925-932.
- **Low Power and Small Area, 6.9 ps RMS Time-to-Digital Converter for 3D Digital SiPM**. (2017). Roy, N. and Nolet, F. and Dubois, F. and Mercier, M-O. and Fontaine, R. and Pratte, J.-F. *IEEE Transactions on Radiation and Plasma Medical Sciences*. 10(6): 486-494.
- **A 2D Proof of Principle Towards a 3D Digital SiPM in HV CMOS with Low Output Capacitance**. (2016). Nolet F, Rhéaume V-P, Parent S, Charlebois SA, Fontaine R, Pratte J-F. *IEEE Transactions on Nuclear Science*. 63(4): 2293-2299.
- **Implementation study of Single Photon Avalanche Diodes (SPAD) in HV CMOS 0.8 µm technology**. (2015). Berube BL., Rhéaume V-P., Parent S., Maurais L., Corbeil Therrien A., Charlebois SA., Fontaine R., Pratte J-F. *IEEE Transactions on Nuclear Science*. 62(3): 710-718.
- **Modeling of Single Photon Avalanche Diode Array Detector for PET Applications**. (2014). Corbeil Therrien A., Bérubé B.-L., Charlebois S., Lecomte R., Fontaine R., Pratte J.-F. *IEEE Transactions on Nuclear Science.* 61(1): 14-22.
- **Dark Count Impact for First Photon Discriminators for SPAD Digital Arrays in PET**. (2014). Tétrault M.-A., C. Therrien A., Desaulniers Lamy A., Boisvert A., Fontaine R., Pratte J.-F. *IEEE Transactions on Nuclear Science*. 62(3): 719-726.
- **Real-Time Discreet SPAD Array Readout Architecture for Time of Flight PET**. (2014). Tétrault M.-A., Desaulniers Lamy É., Boisvert A., Thibaudeau C., Dubois F., Fontaine R., Pratte J.-F. *IEEE Transactions Nuclear Science.* 62(3): 1077-1082.

A team's work

Université de Sherbrooke

- Roger Lecomte
- Henri Dautet
- Julien Sylvestre
- David Danovitch
- Caroline Paulin
- Catherine Pepin
- Danielle Gagné
- Étienne Paradis
- Étienne Grondin
- Konin Koua
- Simon Carrier
- Nicolas Roy
- Frédéric Nolet
- Samuel Parent
- Audrey Corbeil Therrien
- Benoit-Louis Bérubé
- Marc-André Tétrault
- Frédéric Vachon
- Tommy Rossignol
- Gabriel St-Hilaire
- Jacob Deschamps
- Xavier Bernard
- Thomas Dequivre
- William Lemaire
- Philippe Martel-Dion
- Nicolas St-Jean
- Artur Turala
- Luc Maurais
- Maxime Côté
- Vincent Philippe Rhéaume
- Étienne Desaulniers Lamy
- Alexandre Boisvert
- Michel Labrecque-Dias
- Pascal Gendron
- Arnaud Samson
- Jonathan Bouchard
- Frédérik Dubois
- Marc-Olivier Mercier
- Frédéric Bourque
- Keven Deslandes
- Charles-Frédérick Gauthier
- Valérie Gauthier

Collaborators

- Fabrice Retiere (Triumf)
- Lorenzo Fabris (ORNL)
- Simon Viel (Carleton)
- nEXO Collaboration
- nEXO Canada

Teledyne DALSA Semiconducteur Inc

- Claude Jean (CEO)
- Stephane Martel
- Robert Groulx
- Maxime Côté

TELEDYNE IMAGING Everywhereyoulook™

NSERC CRSNG

Arthur B. McDonald Canadian Astroparticle Physics Research Institute

INNOVATION.CA CANADA FOUNDATION FOR INNOVATION | FONDATION CANADIENNE POUR L'INNOVATION

TRIUMF

OAK RIDGE National Laboratory

BERKELEY LAB

Fonds de recherche sur la nature et les technologies Québec

RESMIQ Regroupement Stratégique en Microsystèmes du Québec

CMC MICROSYSTEMS

3IT

CANADA FIRST RESEARCH EXCELLENCE FUND | APOGÉE CANADA FONDS D'EXCELLENCE EN RECHERCHE

INSTITUT QUANTIQUE

UNIVERSITÉ DE SHERBROOKE