DHWG Flange Vacuum Testing Programme

Matthew Capstick

24-20-2021

What are we wanting to test?

1. Rectangular flange (Kamil)
   i. Testing a single geometry vacuum test piece
      i. Assuming that the previous IUWR90 tests (Gasket RF connections etc.) are still valid
      ii. Assuming that the gasket pressure differences are unlikely to affect the vacuum seal
   ii. Testing several vacuum test pieces with varying of bolt patterns
      i. Assuming that the previous IUWR90 tests (Gasket RF connections etc.) are still valid
      ii. Allows testing if the gasket pressure differences affect the vacuum seal
   iii. Testing several flange RF geometries
2. Choke mode flange (Igor)
   i. RF design is not final, therefore only the vacuum seal could be tested
      i. Testing of only the vacuum connection would be a test of a QCF flange connection, unlikely to be useful
3. Alternative options
   1. Proposing an alternative flange design entirely

Recap: Original IUWR90 Flange

- Original IUWR90 Flange design:
  - Several geometries of ‘square knife edge’ were RF tested

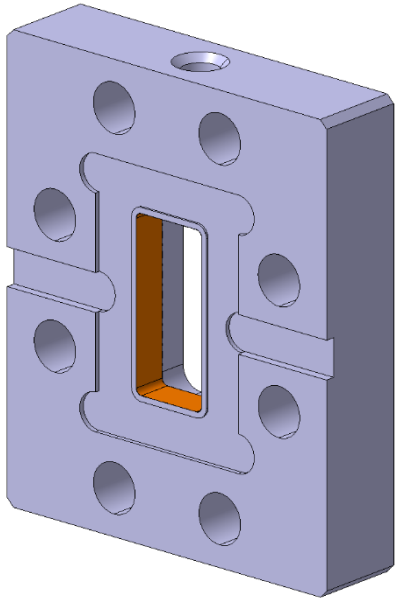

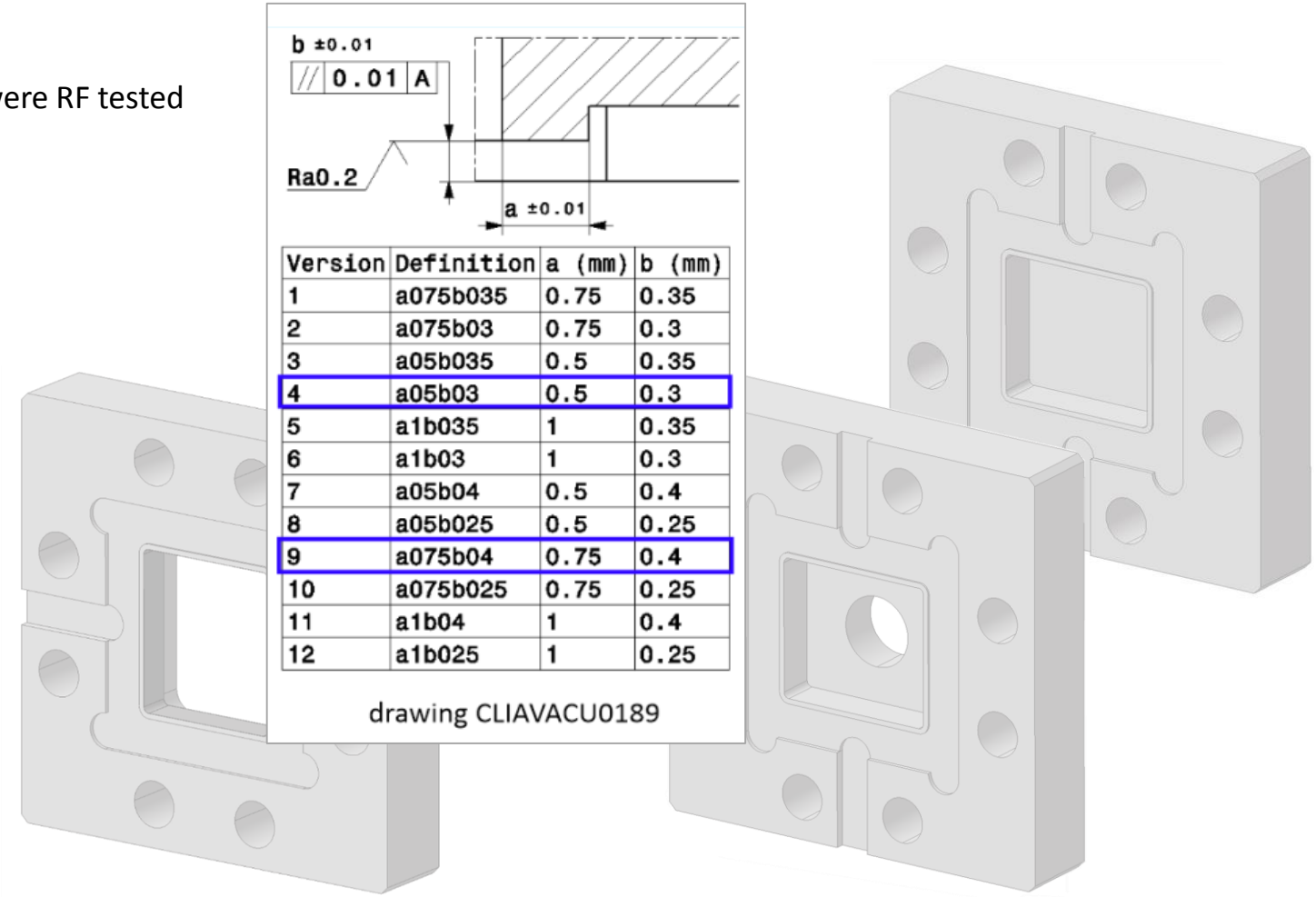

Version	Definition	a (mm)	b (mm)
1	a075b035	0.75	0.35
2	a075b03	0.75	0.3
3	a05b035	0.5	0.35
4	a05b03	0.5	0.3
5	a1b035	1	0.35
6	a1b03	1	0.3
7	a05b04	0.5	0.4
8	a05b025	0.5	0.25
9	a075b04	0.75	0.4
10	a075b025	0.75	0.25
11	a1b04	1	0.4
12	a1b025	1	0.25

drawing CLIAVACU0189

Rectangular Flange

- Current rectangular Flange design:
  - Assumes the current ‘square knife edge’ geometry will still work
  - Assumes that 8 bolts will still provide enough gasket sealing pressure
  - A tapped hole on two sides was originally included ‘for mounting’ according to the documentation I found, Kamil chose to remove it – why?

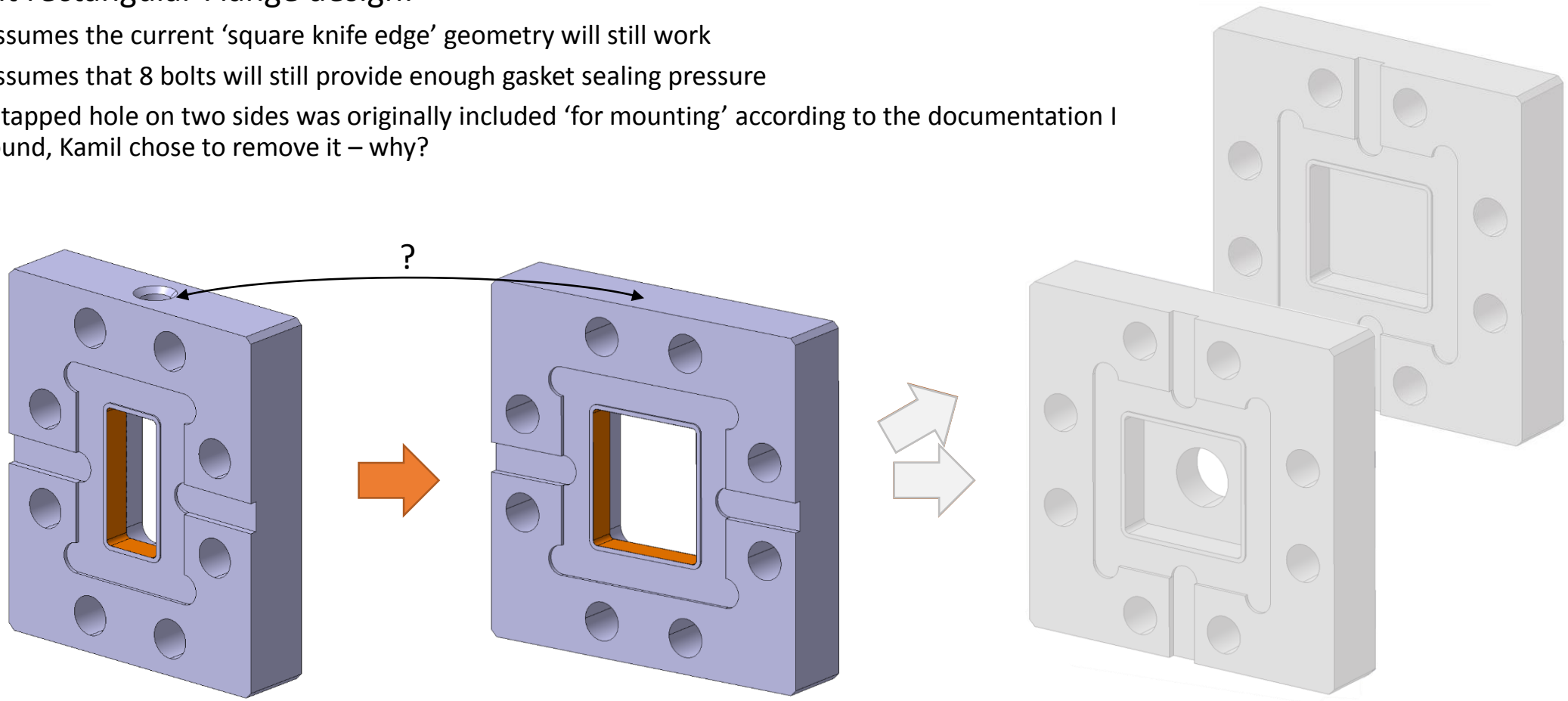

Flanges Under Test

- Rectangular flange variations for testing:
  - The same as the current rectangular flange
    - Lack of tapped hole ‘for mounting’ is not needed as the flange is not mounted on a waveguide
  - Removal of copper coating from the RF contact surface
  - Blank version without waveguide hole and mounting feature
    - Slight increase in overall flange stiffness as a blank
  - Possibility to produce a 10-bolted version to increase gasket pressure

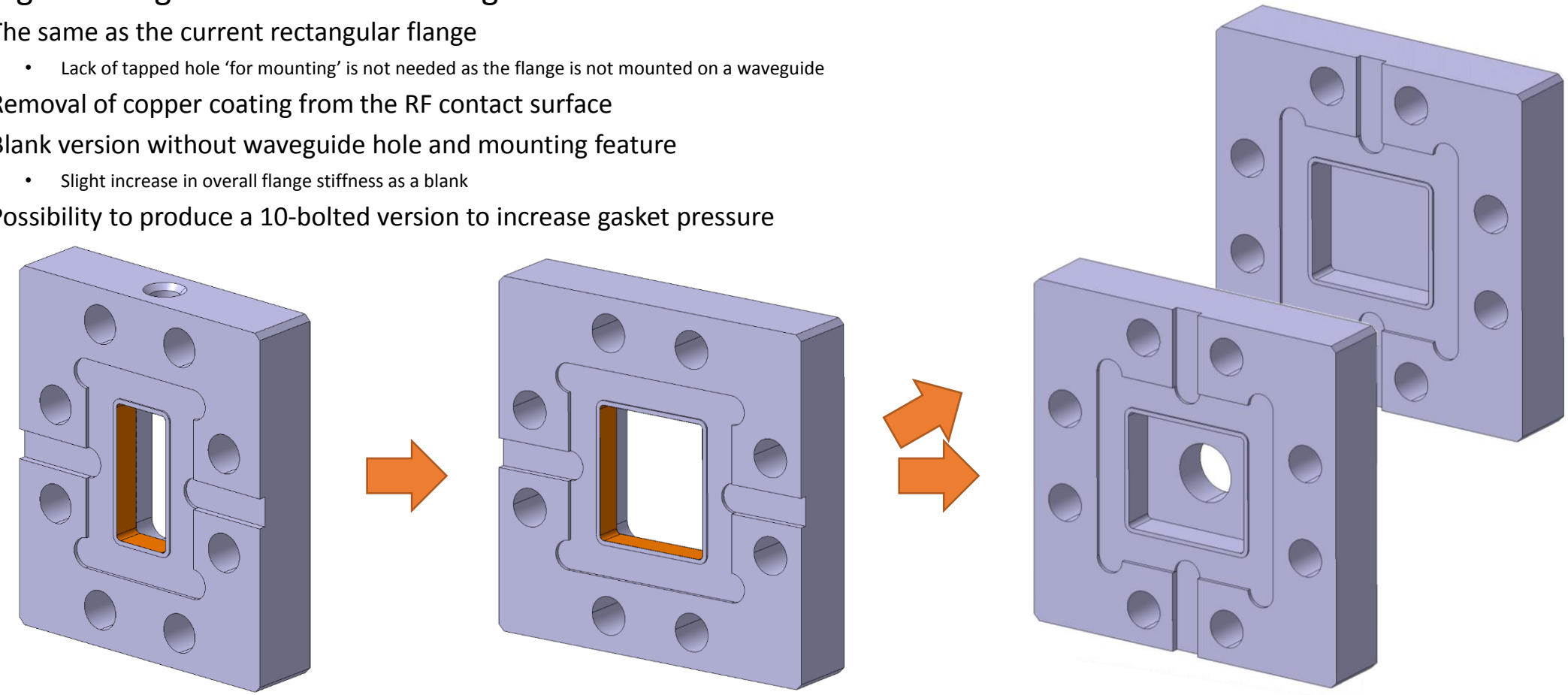

Gasket Sealing Pressure

- Standard CF50 sealing = 6 x M6 (10.9) @ 16Nm[Kurt Lesker]
- Copper CF Gaskets require a sealing pressure greater than 200N/mm (range 150N/mm – 600N/m)[Pfeiffer Vacuum]
- Calculated sealing pressures:
  - Standard round CF: 444.44 N/mm
  - Current WR90: 535.48 N/mm
  - Double Height WR90 [8 bolts holes]: 444.89 N/mm
  - Double Height WR90 [10 bolts holes]: 654.04 N/mm

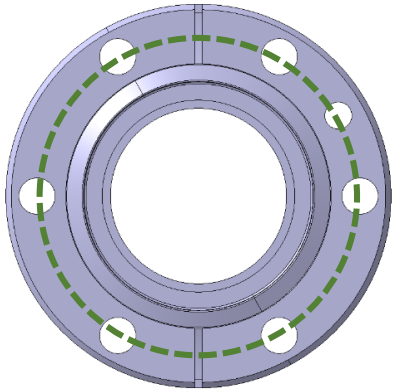

Standard Round CF 50 [6 bolts holes]

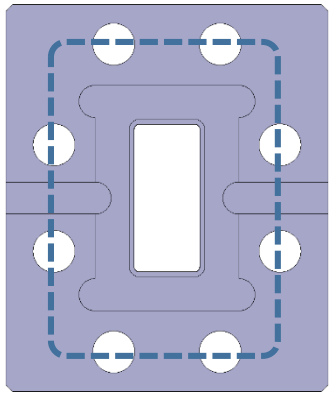

Current WR90 [8 bolts holes]

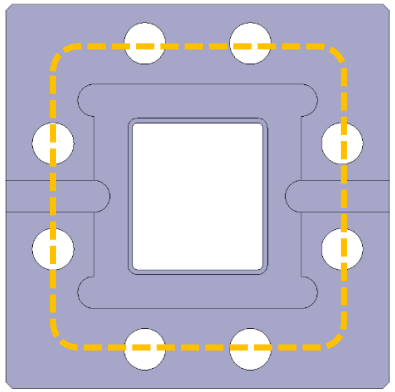

Double Height WR90 [8 bolts holes]

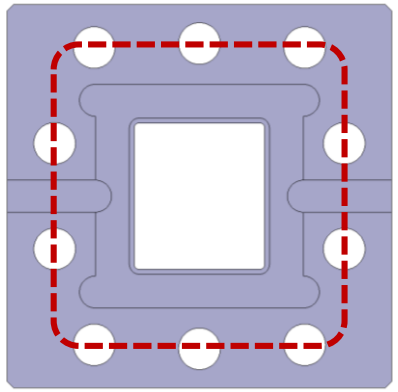

Double Height WR90 [10 bolts holes]

Rectangular Flange Vacuum Test

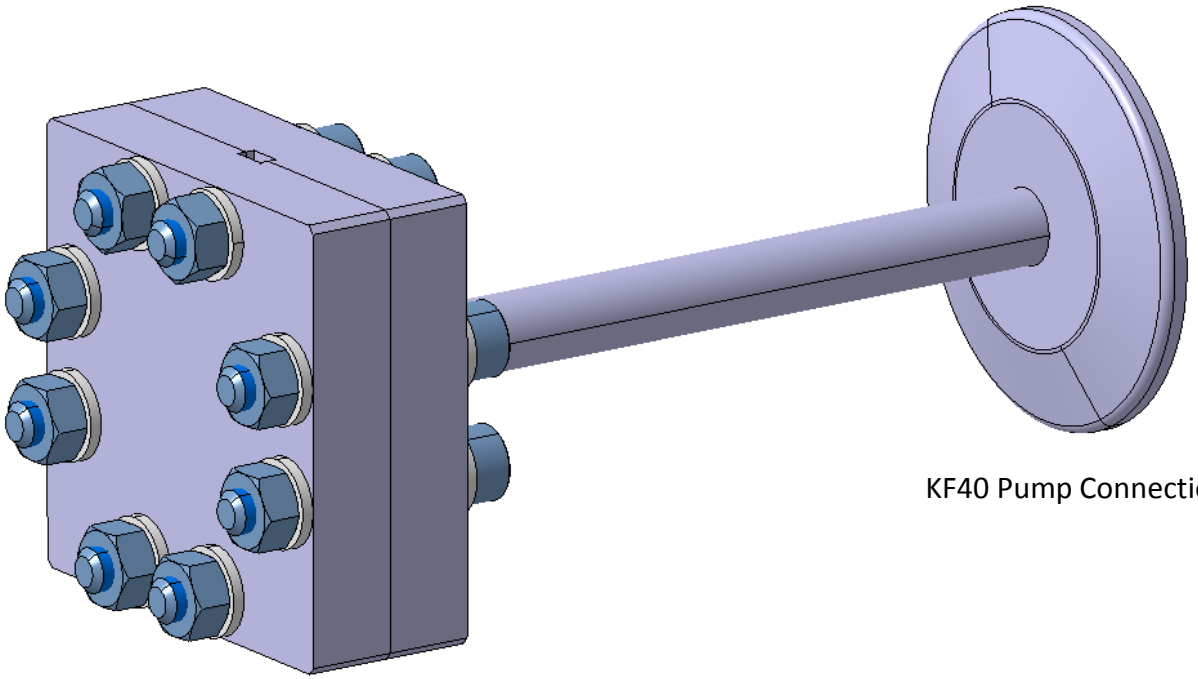

Rectangular Flange Vacuum Test

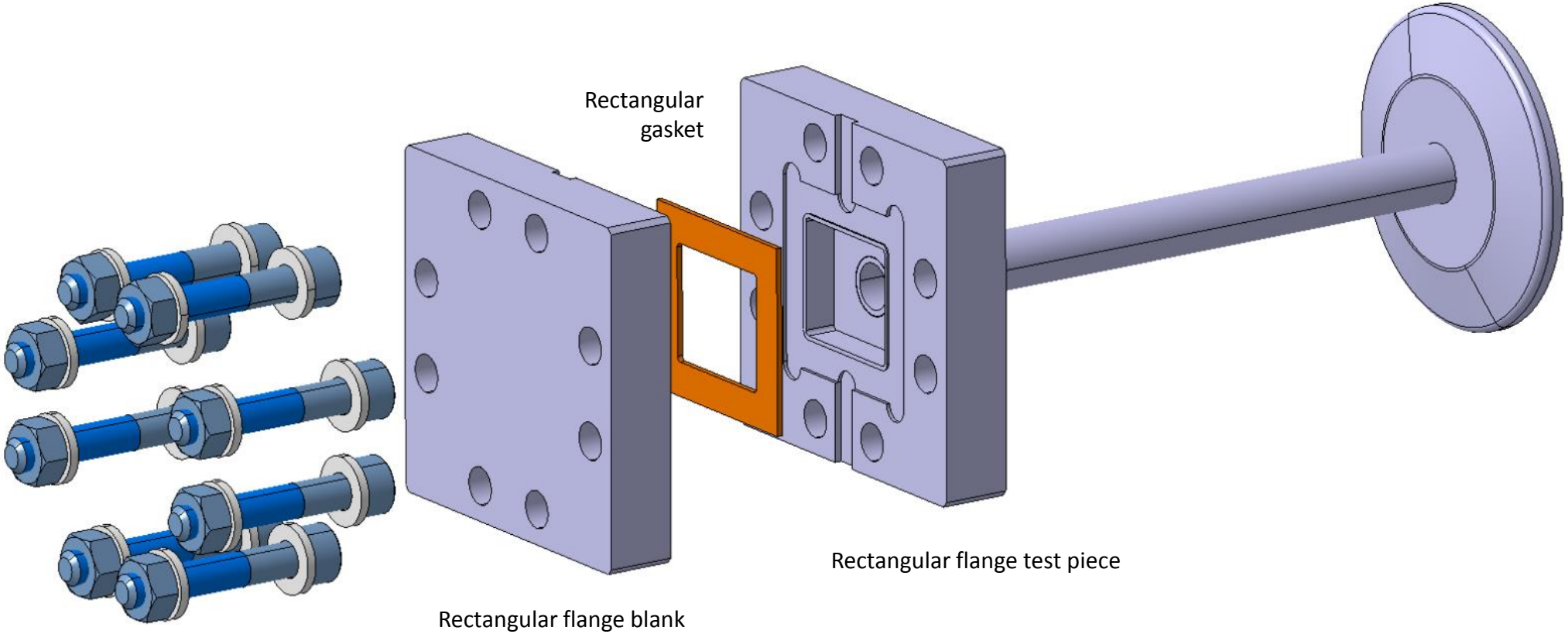

Rectangular Flange Vacuum Test

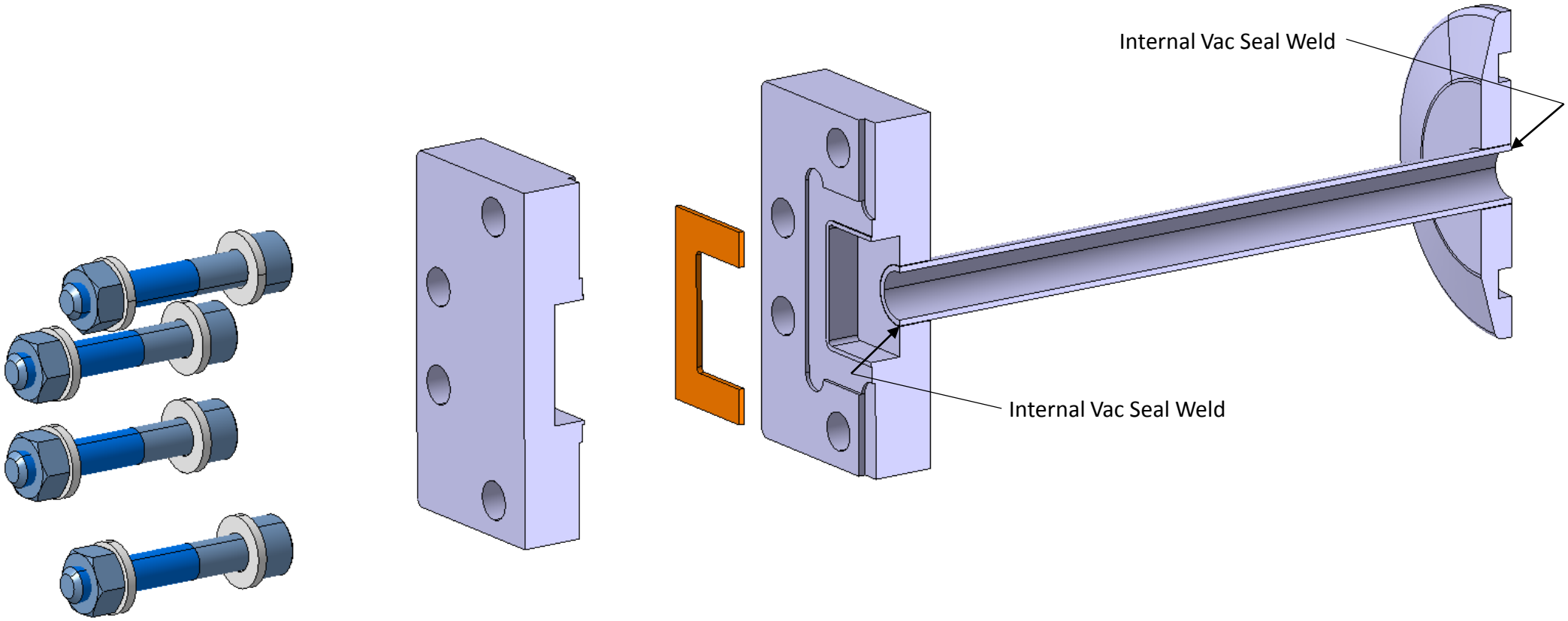

Alternative Rectangular Flange Vacuum Test

- Alternatively we can perform a symmetric test, without the blank flange
  - Increases the number of potential leak points

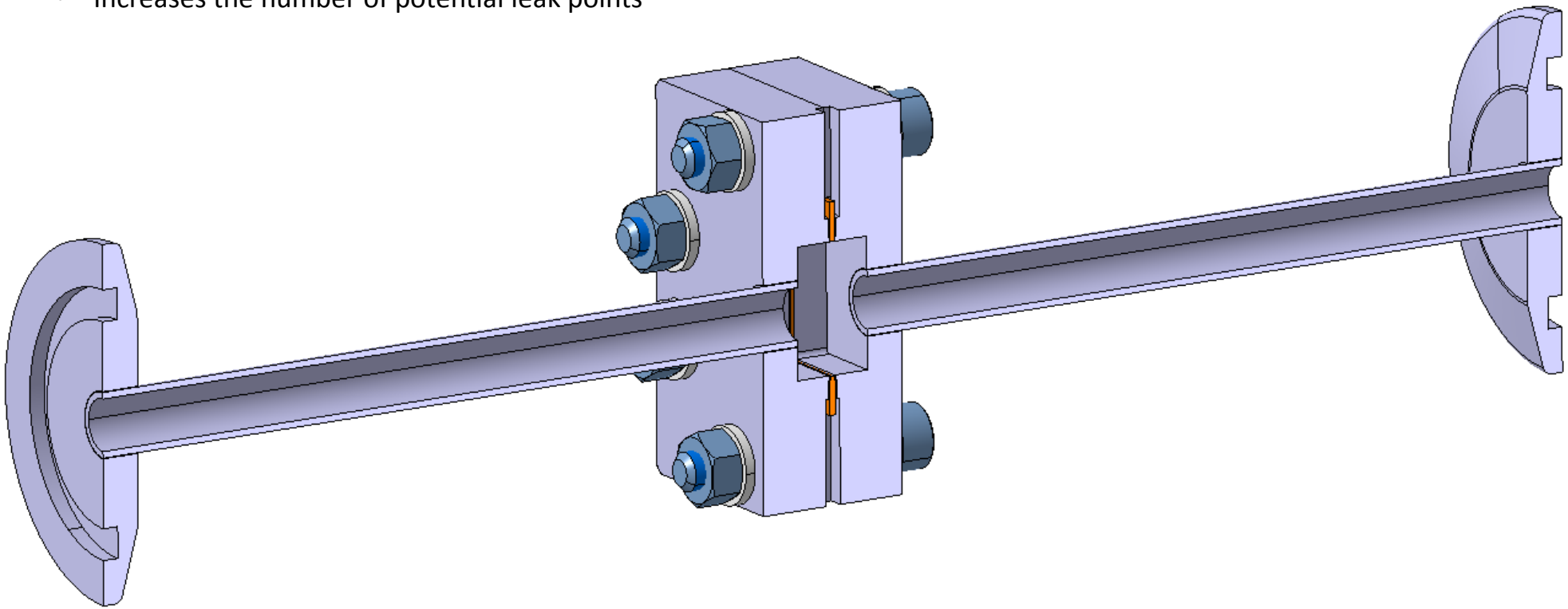

Manufacturing Drawings

- Kamil produced a drawing for the rectangular flange
- Only small modifications needed for the test pieces

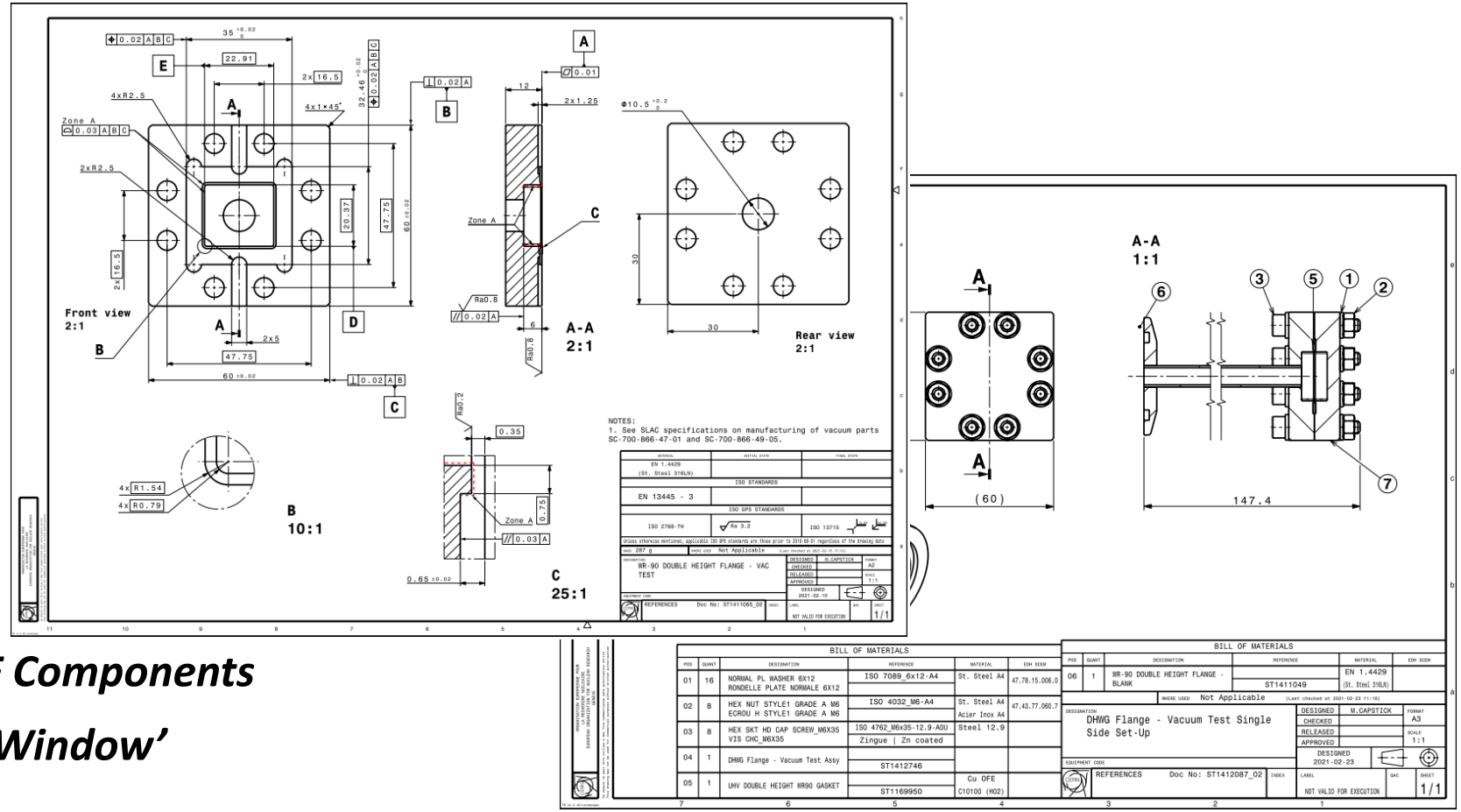

CDD#: CLIAPFX *'Passive RF Components*

'Xband RF Window'

Choke Mode

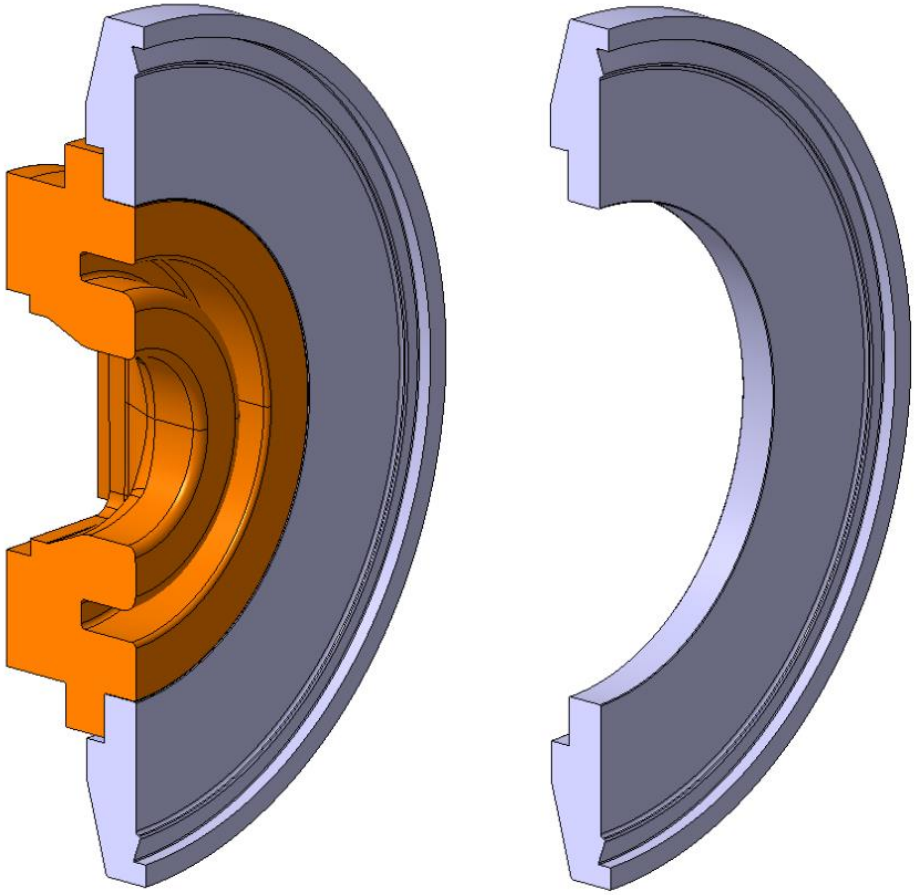

- Two piece brazed choke mode flange as discussed last week
- The geometry of the copper component is not final
- Testing just the stainless steel component would only test the QCF connection
  - A well known and often used connection

Alternative Flange Design

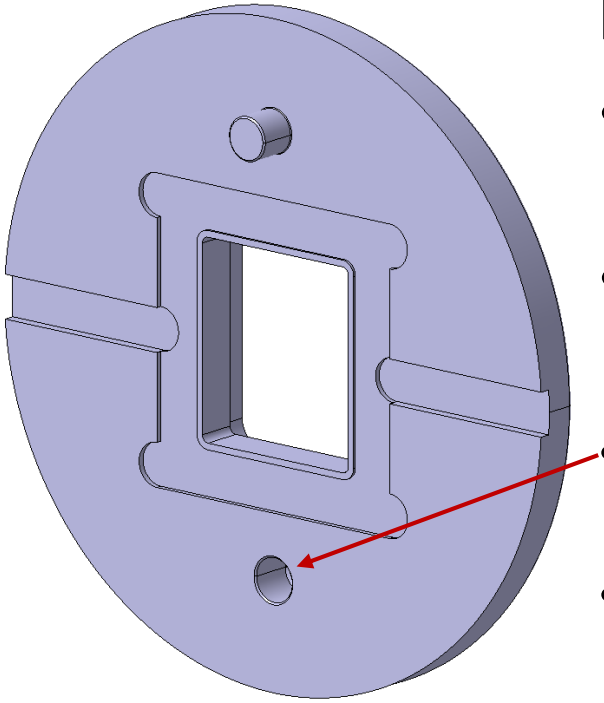

Markus suggested and alternative flange based around the:

- IUWR90 gasket RF connection and vacuum seal
- KF50 equivalent external geometry

- Would require alignment features (pins or dowels) to fix rotation
- Weather the KF50 clamp would produce enough clamping force is unknown

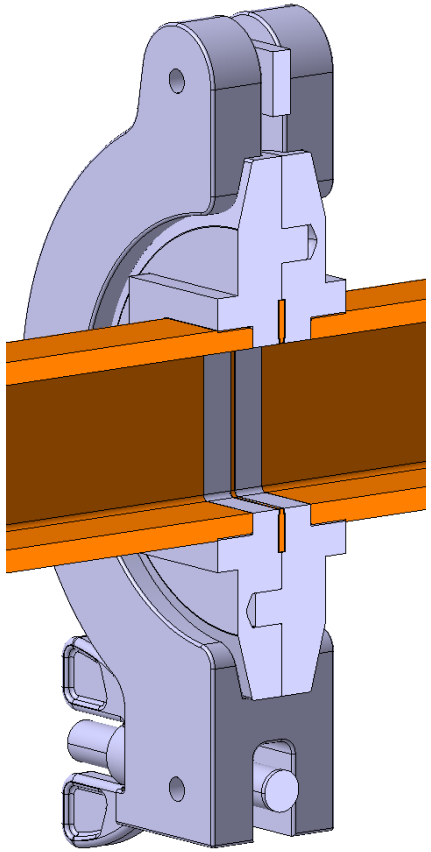

What are we wanting to test?

1. Rectangular flange (Kamil)
   i. Testing a single geometry vacuum test piece
   ii. Testing several vacuum test pieces with varying of bolt patterns
   ~~iii. Testing several RF flange geometries~~
   iv. What test assembly is preferred?
   v. Number of pieces to test?
2. Choke mode flange (Igor)
   ~~i. RF design is not final, therefore only the vacuum seal could be tested~~
3. Alternative options
   1. Proposing an alternative flange design entirely