Quantum Acceleration of Electromagnetic Axion Detection

100 kHz – 100 GHz

Kent Irwin
Stanford University
SLAC

QCD axions – where we are now

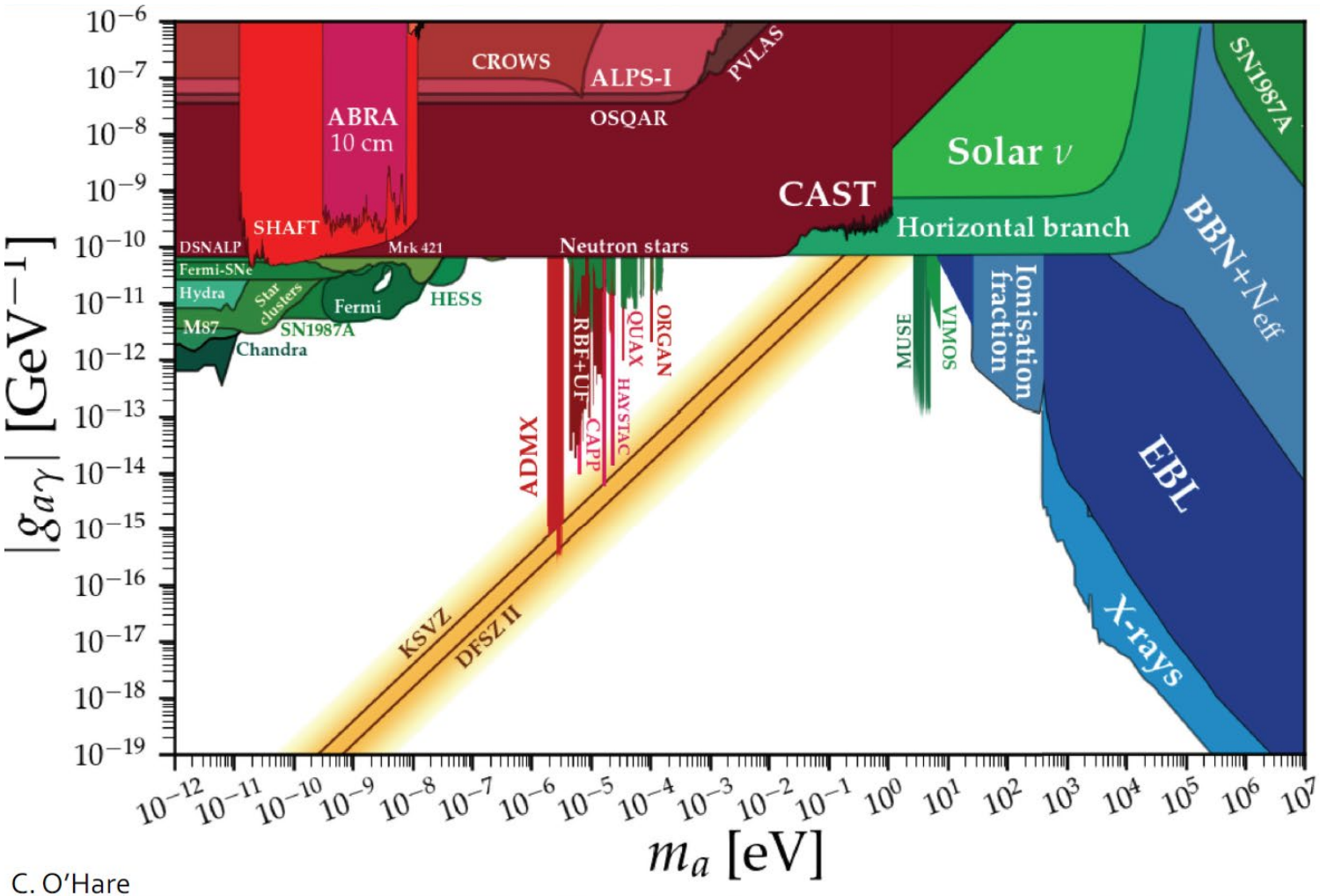

C. O'Hare

Need to cover ~peV to ~ 10s of meV – wide, well motivated mass space for QCD axions to make up dark matter

> 1 μeV: ADMX and MADMAX projections

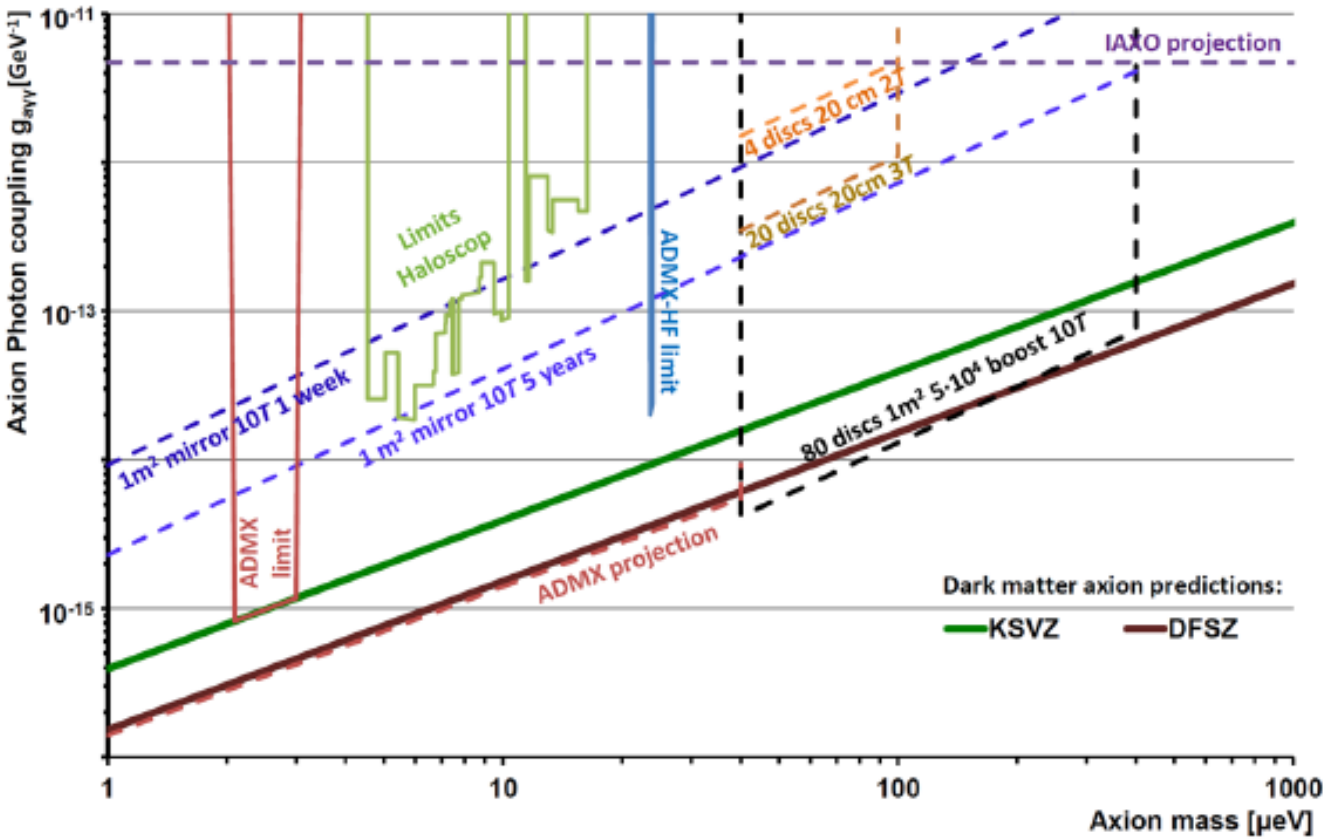

B. Majorovits, JOP Conf. 1342 (2020) 012098

< 1 μeV: DM Radio Experiment Family

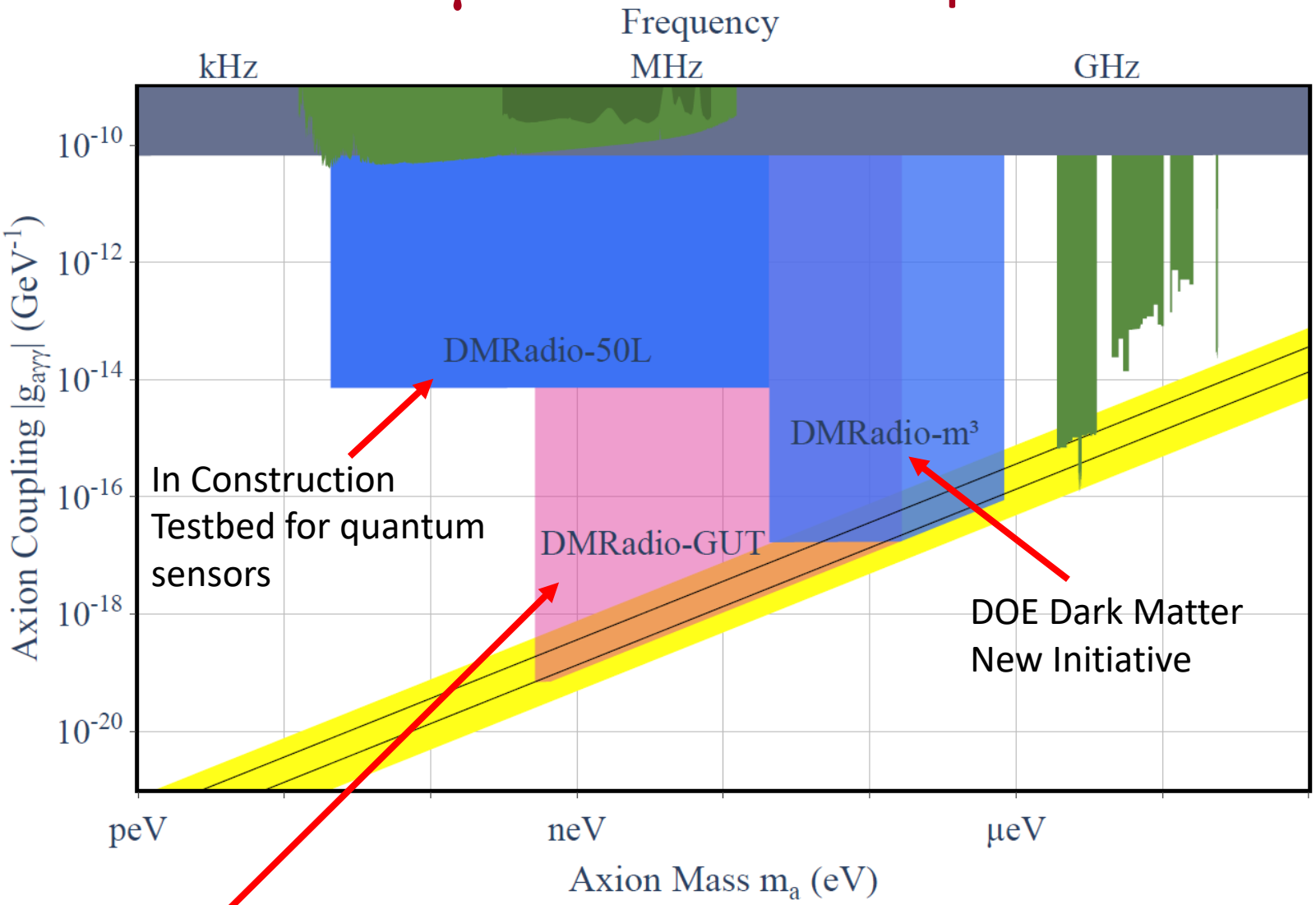

DMRadio-GUT is a long way off!

Chaudhuri, Saptarshi. Snowmass2021-Letter of Interest "DMRadio-GUT: Probing GUT-scale QCD Axion Dark Matter."

QCD axion: the need for quantum sensors

- Projected science reach at SQL shown in blue
- Assumptions made about experimental parameters (volume, magnetic field strength) may change—only approximate!

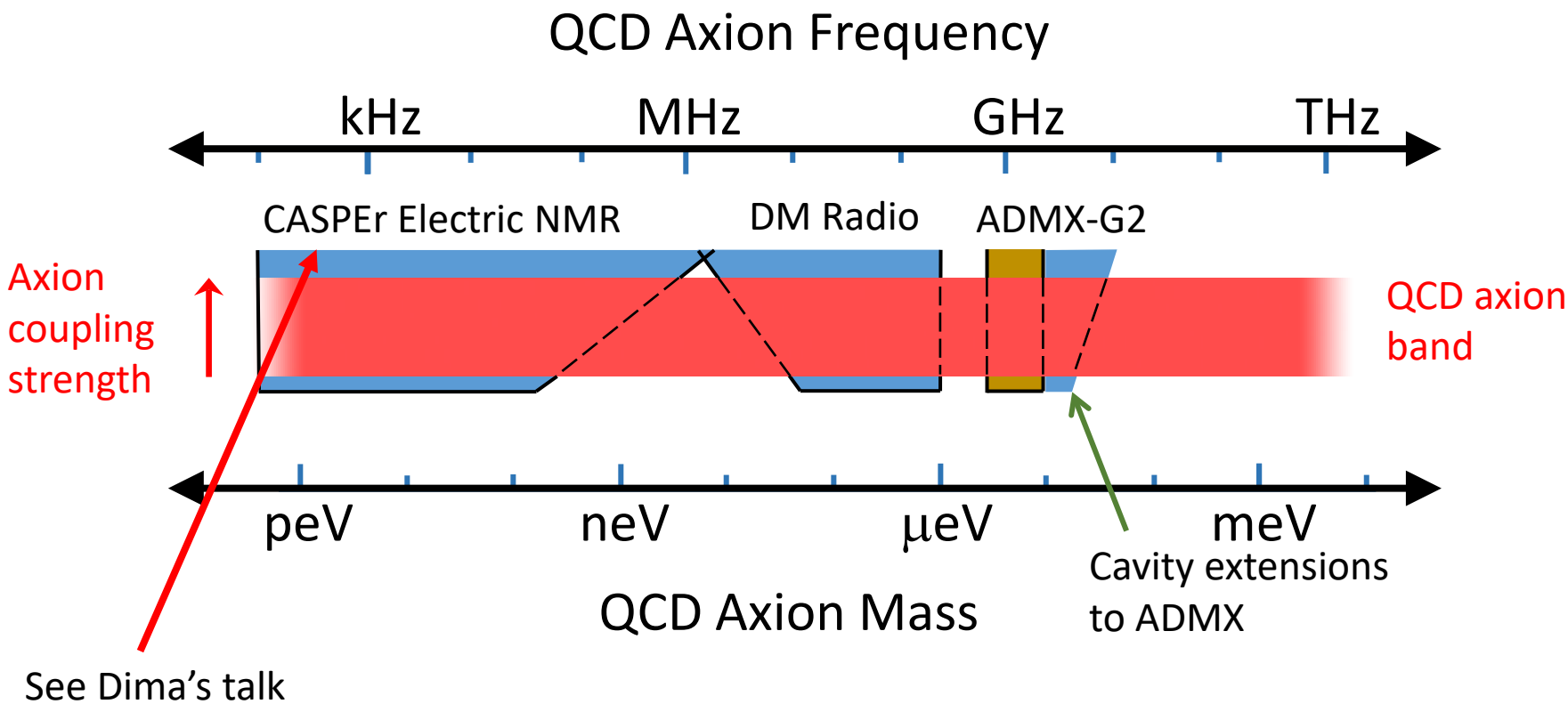

QCD axion: the need for quantum sensors

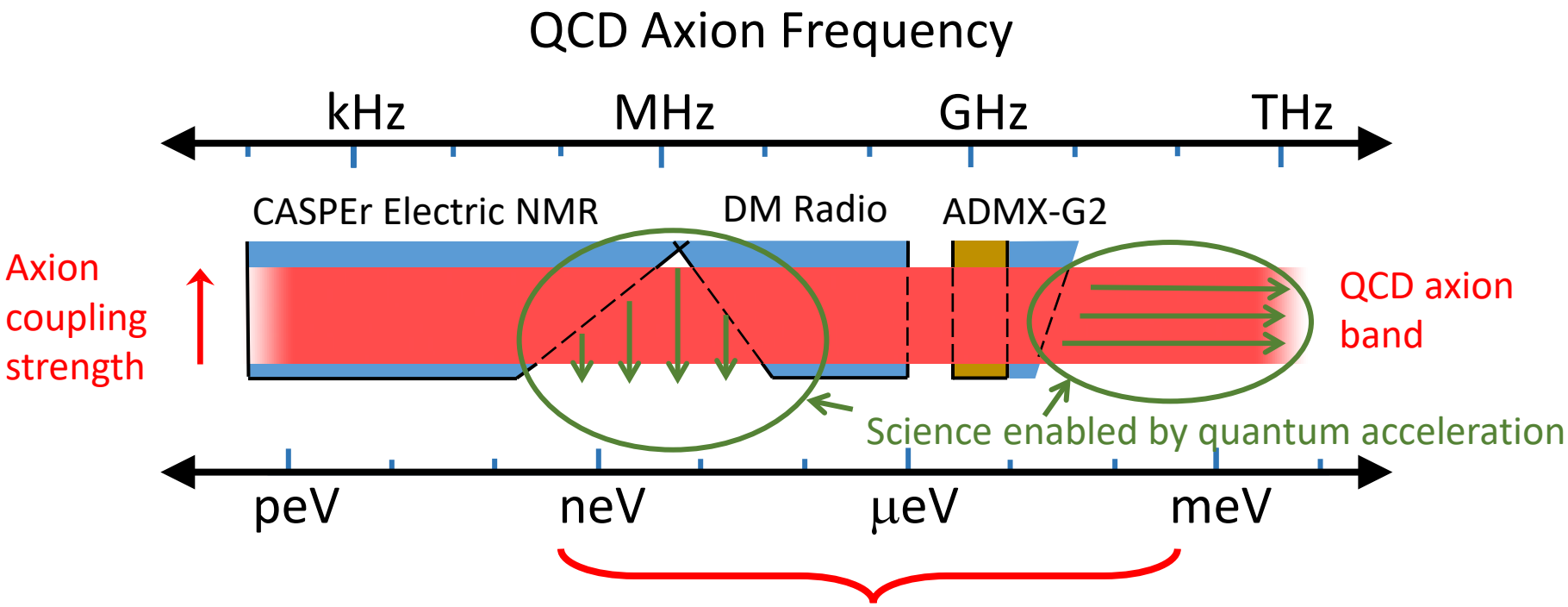

- This talk will cover electromagnetic-coupled axion detection technology for ~ 0.4 neV to ~ 400 meV (~ 100 kHz to ~ 100 GHz).
- Lower frequencies are inconceivably difficult (to get to DFSZ with EM coupling).
- Higher frequencies are probably massively multi-moded / radiatively coupled; quantitative axion coupling theory not fully yet fully worked out, detector needs are not rigorously defined yet.

Detecting the axion-photon coupling

- Most searches probe axion-photon coupling

$$L_{int} \propto \kappa_a a \vec{E} \cdot \vec{B}$$

- Axion behaves as effective EM current density:

$$\vec{J}_a(\vec{x}, t) = -\frac{\kappa_a}{Z_{fs}} \vec{B}_{DC}(\vec{x}) \partial_t a(t)$$

Signal enhanced w/ resonator

Van Bibber, Rosenberg, *Physics Today*, 2006

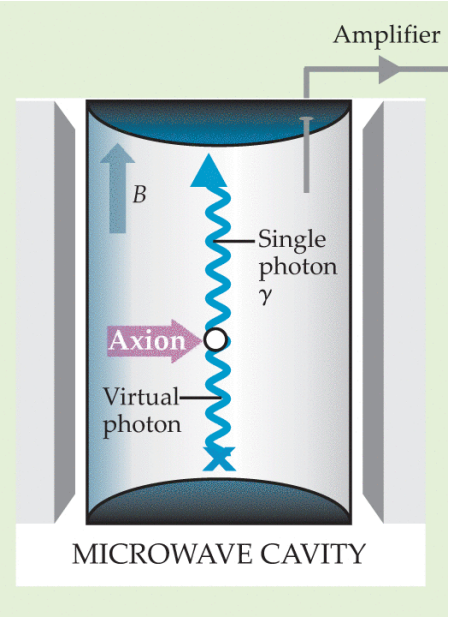

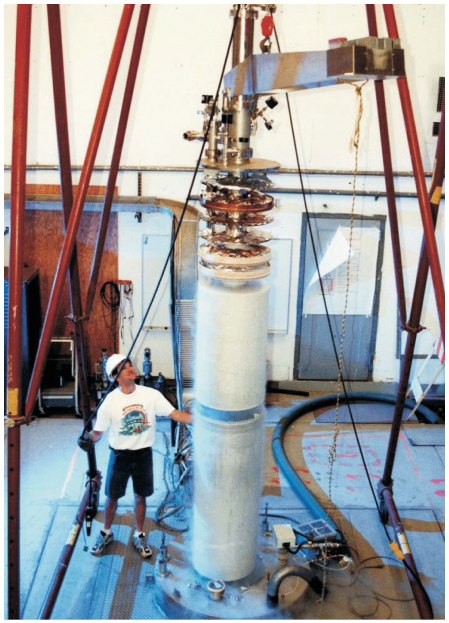

Electromagnetic Quantum Sensing Regimes

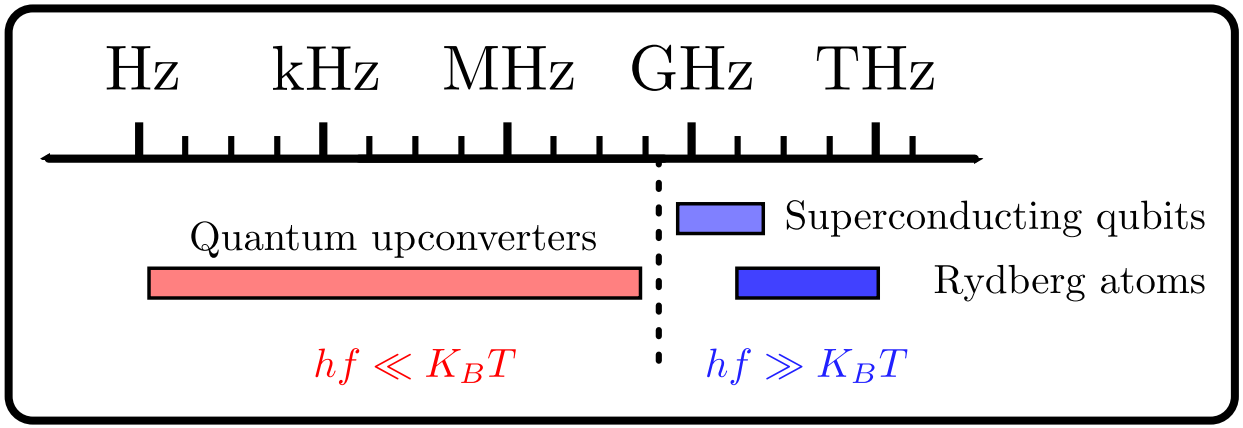

- Approaching the Standard Quantum Limit
- Squeezing
- QND photon counting
- Backaction evasion
- High-N Fock state preparation, entangled cavities…
- Also: pair-breaking detectors (TES, MKID, CEB, magcal) going to lower frequency… 100 GHz?

>~ μeV: Ground State

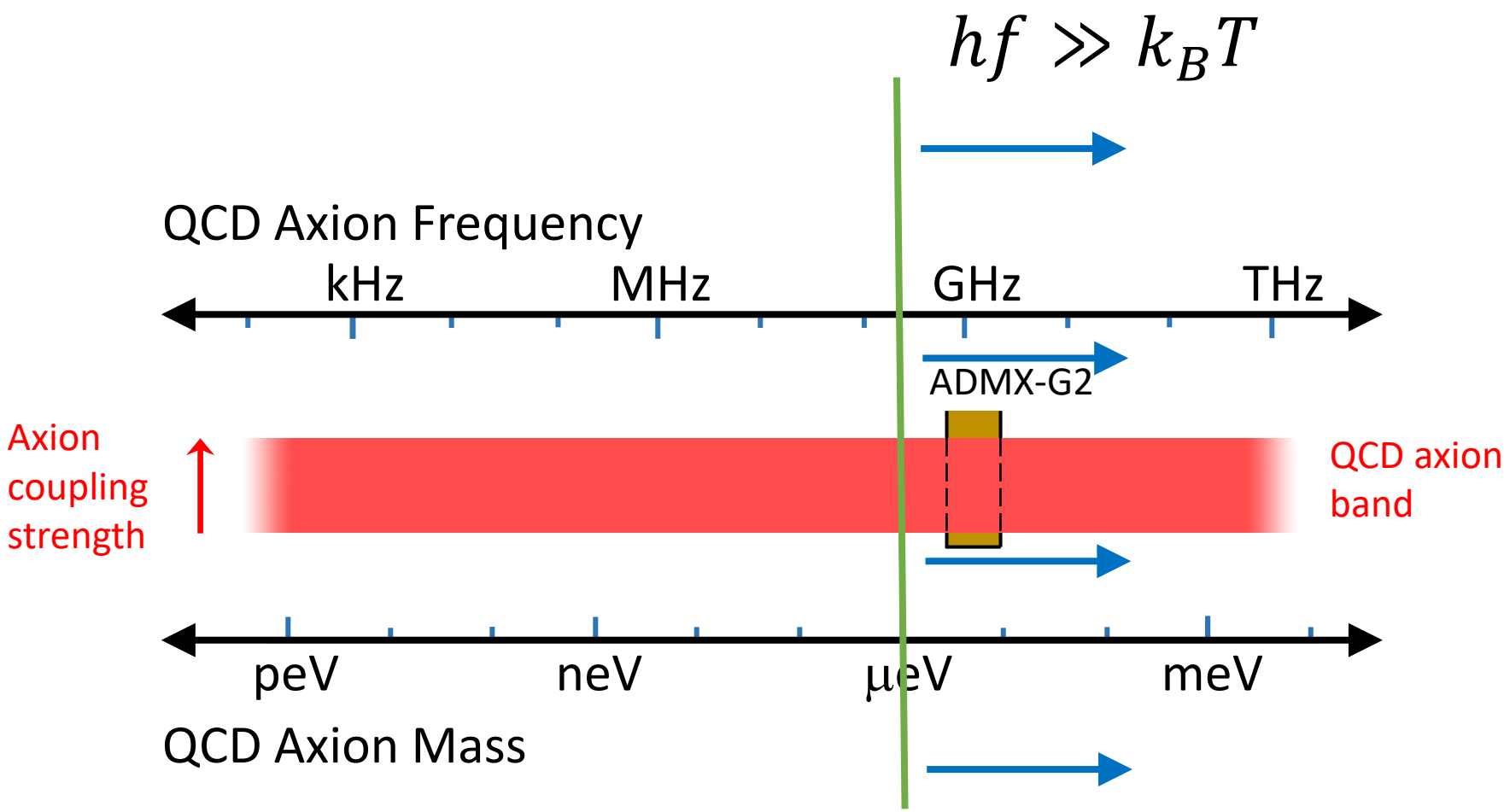

- Ground state
- Cavity resonators (experimental scale of order of Compton wavelength)
- Scattering-mode amplifiers

<~ μeV : High Occupation

$$hf \ll k_B T$$

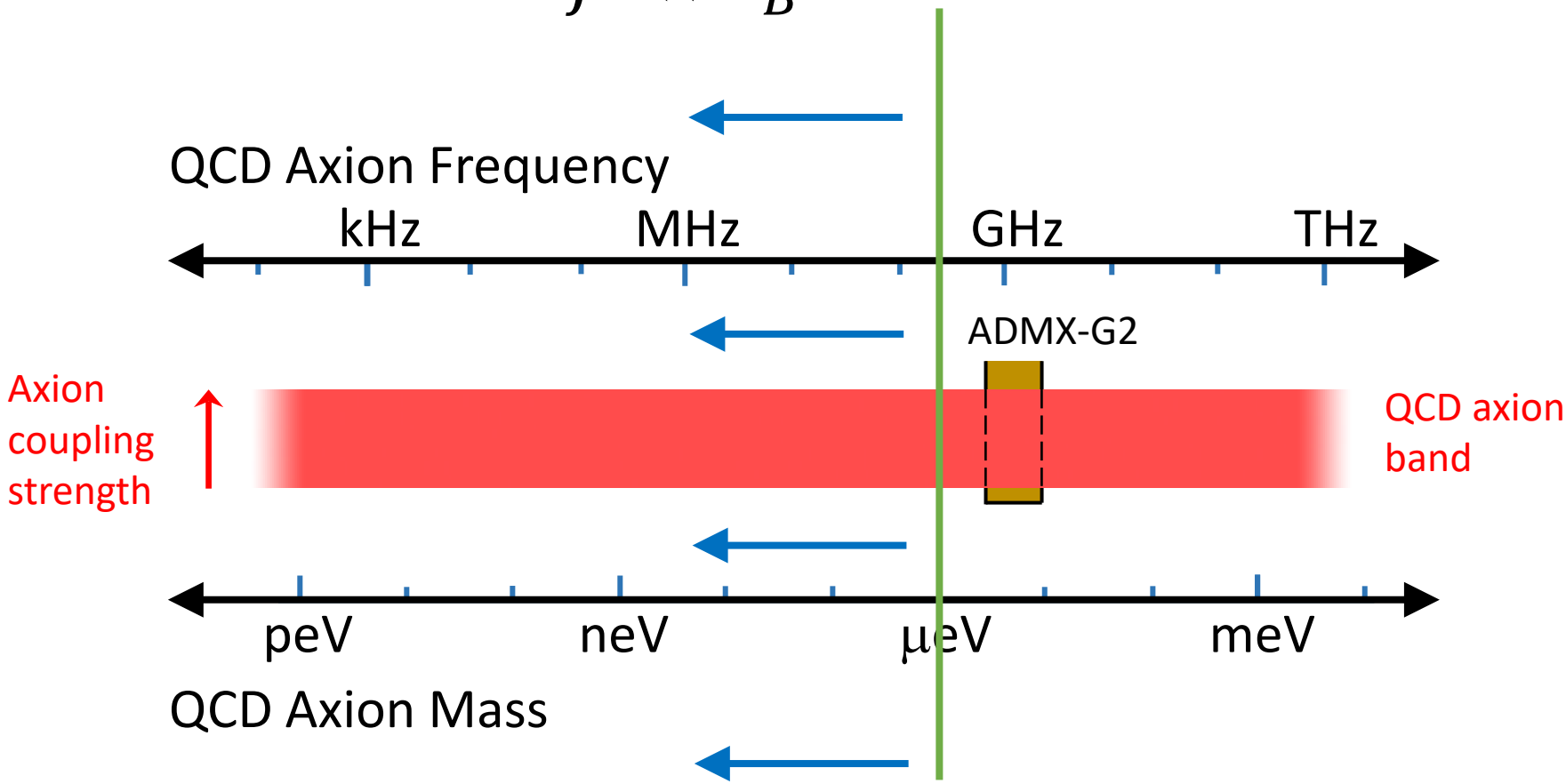

- Thermal state
- Lumped LC resonators (experimental scale << Compton wavelength)
- Op amp-mode amplifiers

HAYSTAC: Acceleration through squeezing

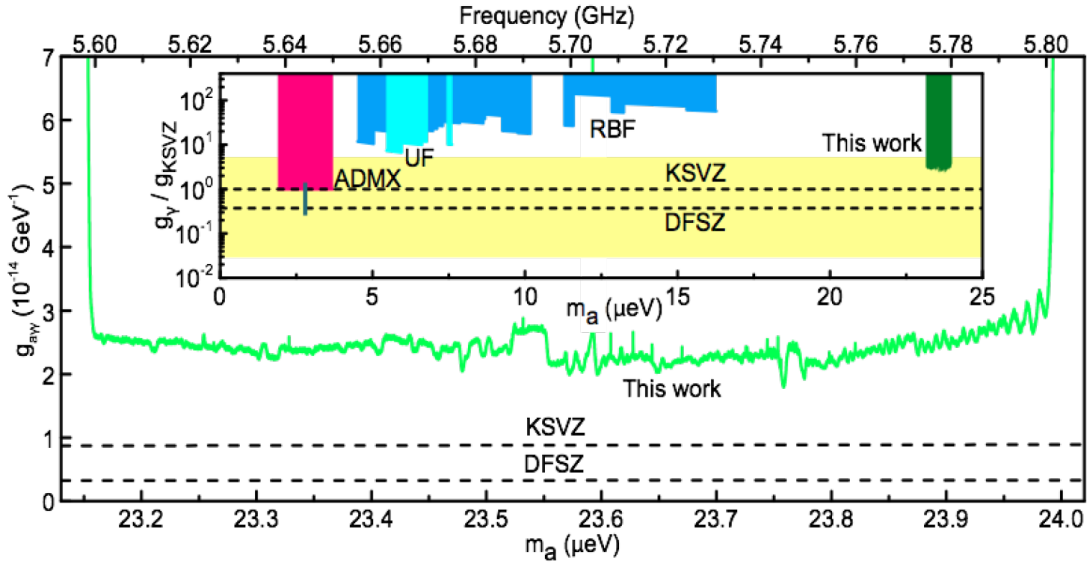

HAYSTAC run 1 & 2 combined exclusion plot

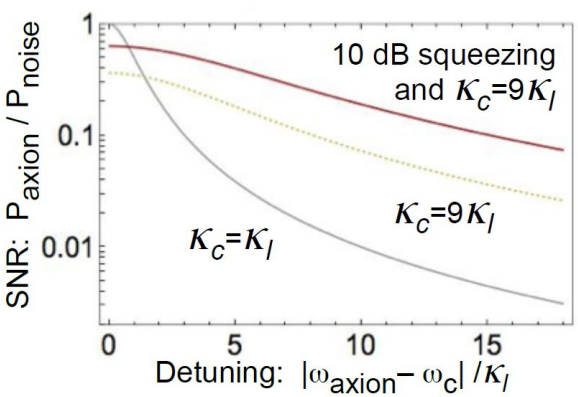

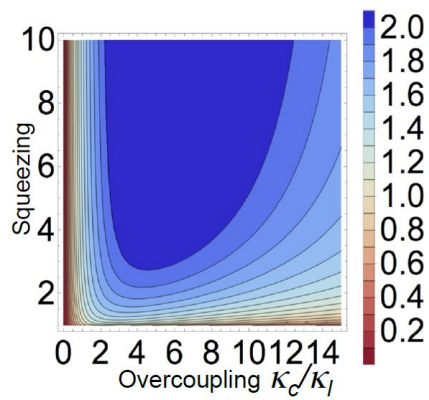

HAYSTAC Phase II squeezed state receiver projected acceleration

Droster, Alex G., and Karl van Bibber. "HAYSTAC Status, Results, and Plans." *arXiv preprint arXiv:1901.01668* (2019).

Photon counting: pair-breaking detectors

TES, MKID, magnetic microcalorimeter, CEB, etc.

See talks by Stafford Withington, Loredana Gastaldo

Ground state measurement: QND photon counting

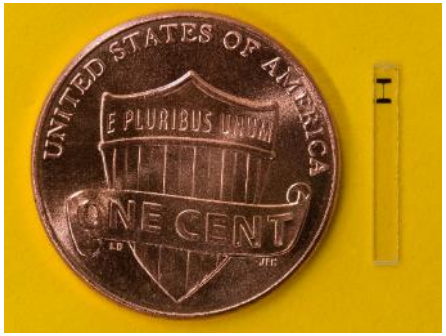

Akash Dixit, Aaron Chou, David Schuster

Repeatedly measure the clock frequency to determine whether the cavity contains 0 or 1 photon:

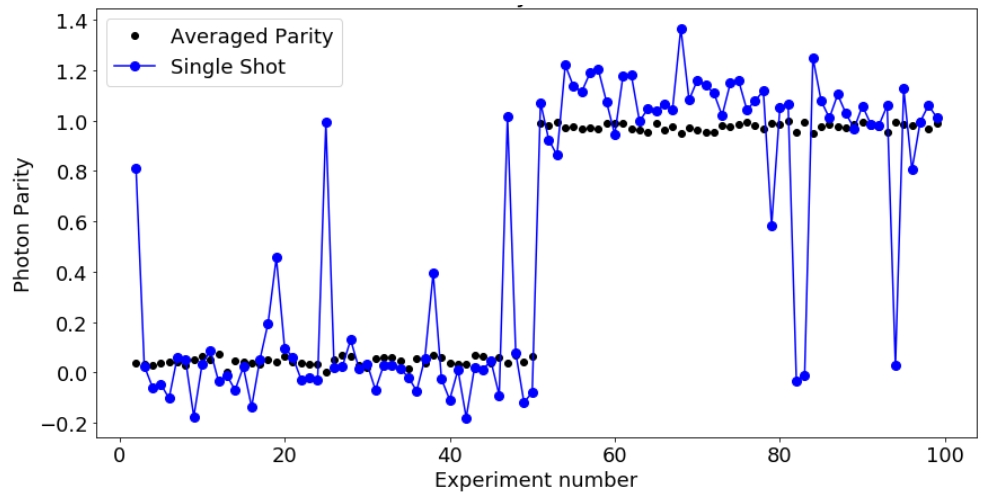

Many QND measurements agree that the cold cavity contains 0 photons

Many QND measurements of the single photon **without absorbing it.**

Inject 1 photon

Use qubit as an atomic clock whose frequency depends on the number of photons in the cavity. The electric field of even a **single photon** will exercise the non-linearity of the qubit oscillator and shift its frequency.

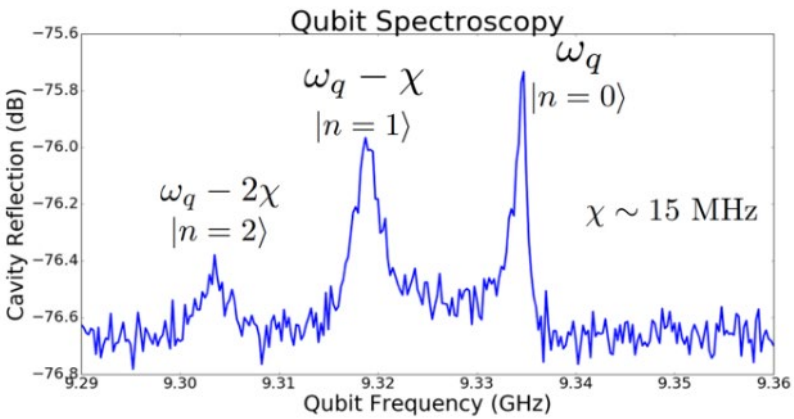

Count # of photons by measuring the quantized frequency shift of the qubit.

Figure Credit: Aaron Chou, FNAL

Fermilab THE UNIVERSITY OF CHICAGO HEISING-SIMONS FOUNDATION

Ground state measurement: QND photon counting

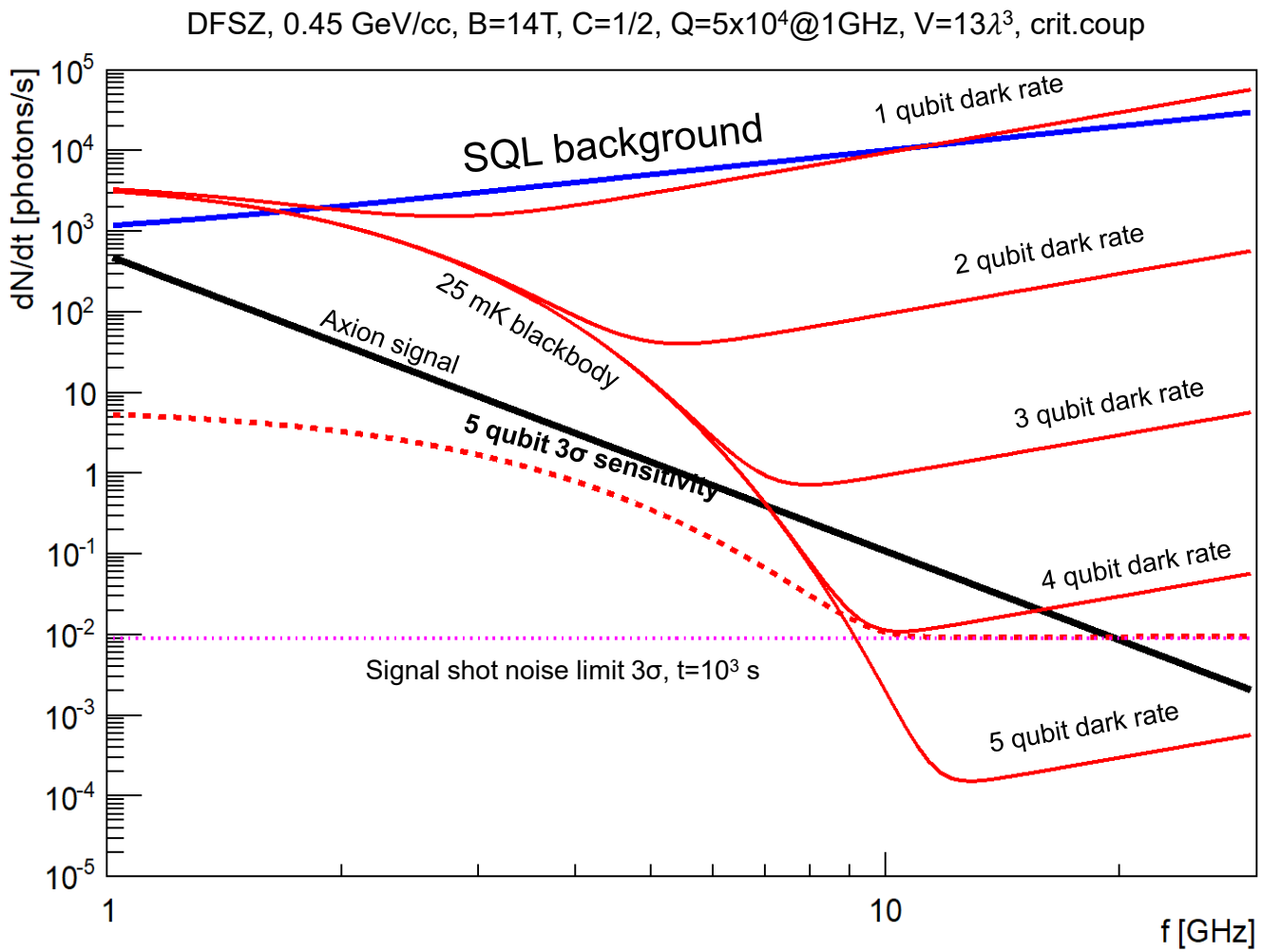

Sensitivity limited only by signal photon shot noise.

Figure Credit: Aaron Chou, FNAL

Fermilab THE UNIVERSITY OF CHICAGO HEISING-SIMONS FOUNDATION

Second regime: High Occupation

$$hf \ll k_B T$$

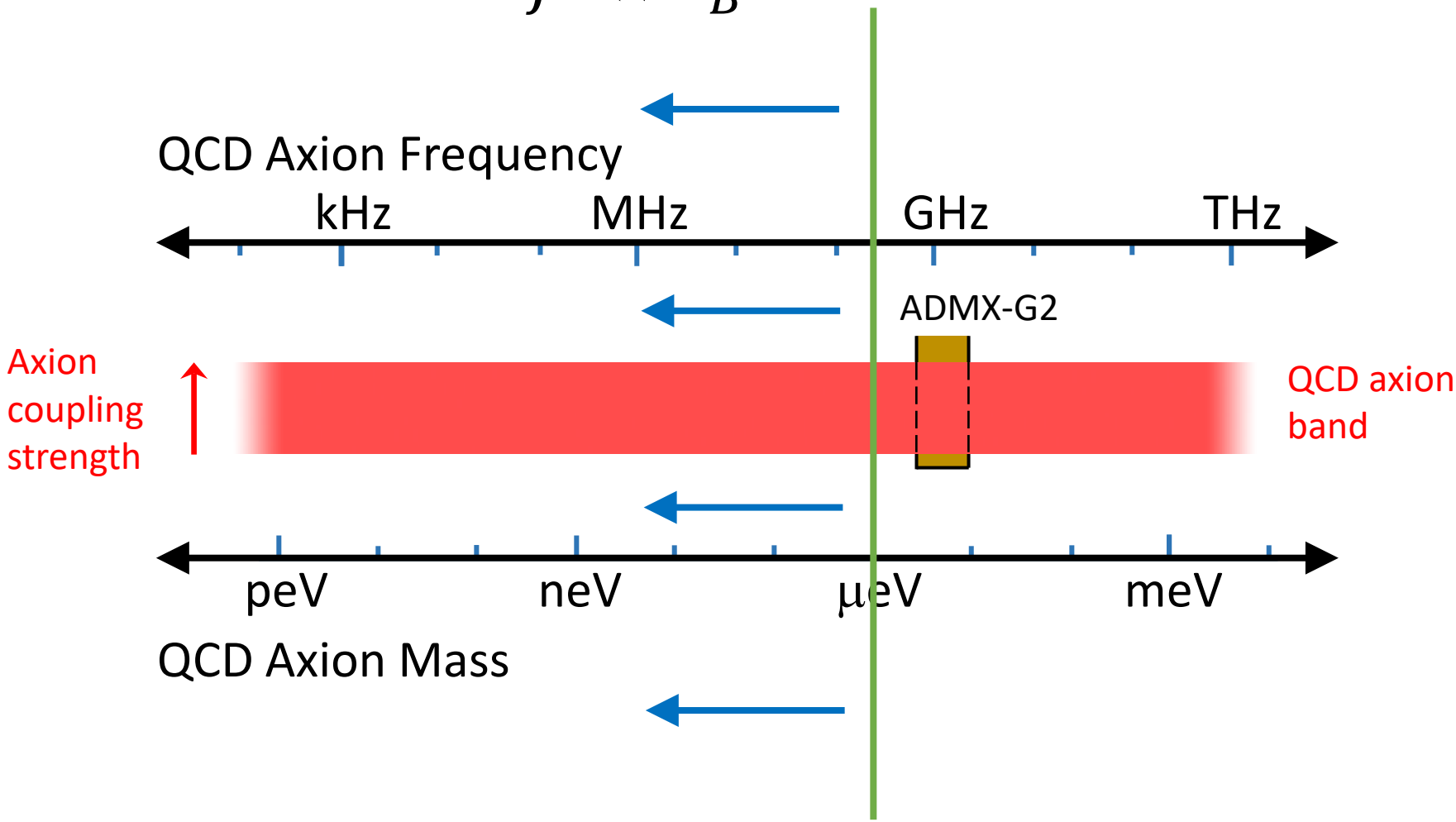

Integrated sensitivity: the figure of merit for one mode

- Science reach determined by integrated sensitivity across search band
- Figure of merit with quantum-limited amplifier:

$$U[S(\nu)] = \int_{\nu_l}^{\nu_h} d\nu \left(\frac{|S_{21}(\nu)|^2}{|S_{21}(\nu)|^2 n(\nu) + 1} \right)^2$$

- $|S_{21}(\nu)|^2$: transmission from dark-matter signal source to amplifier (entry in scattering matrix $S(\nu)$)
- $n(\nu)$= signal source thermal occupation number
- "+1" is standard quantum limit

Example: single-pole resonator

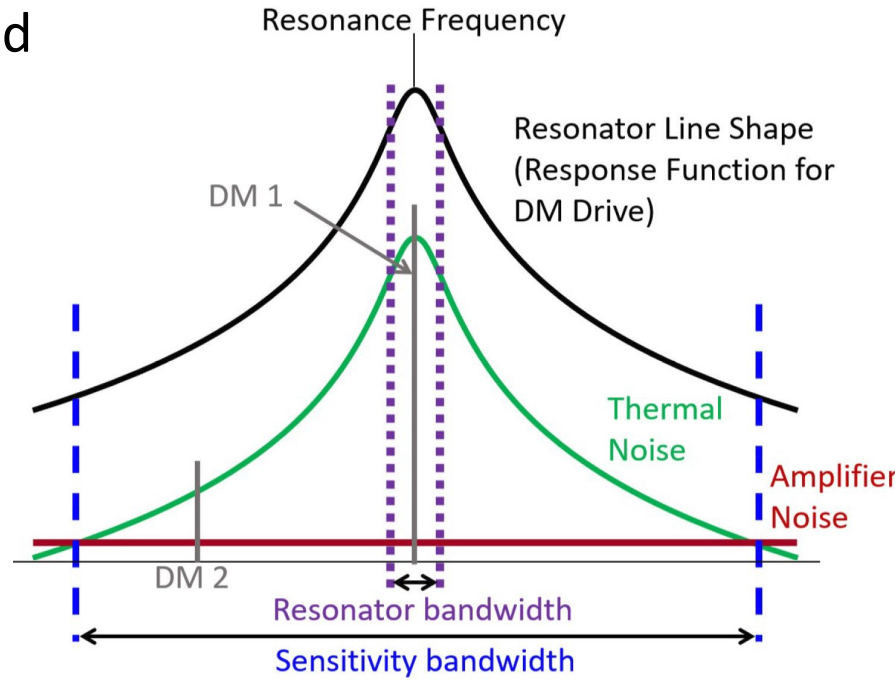

S. Chaudhuri et al., arXiv:1904.05806 (2019).

- A single-pole resonator has nearly ideal integrated sensitivity
- Substantial sensitivity available outside of resonator bandwidth.

Photon counting is useless when $hf \ll k_B T$

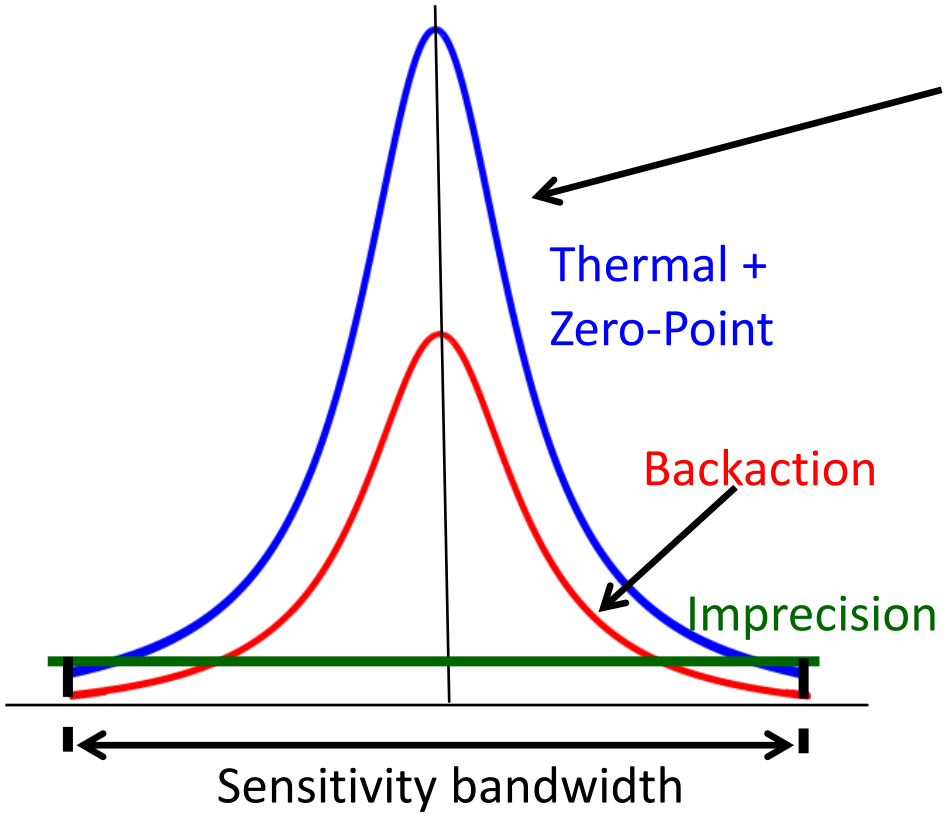

- $\sqrt{N}$ thermal fluctuations in the number of resonator photons
- Sensitivity not improved by photon counting

$\rightarrow$ **Need other techniques**

Implement ***backaction evasion*** to reduce both imprecision and backaction noise below the standard quantum limit, increasing the sensitivity bandwidth to thousands of times larger than the resonator bandwidth

Radio-Frequency Quantum Upconverters: Analagous to Optomechanical Systems

LIGO:

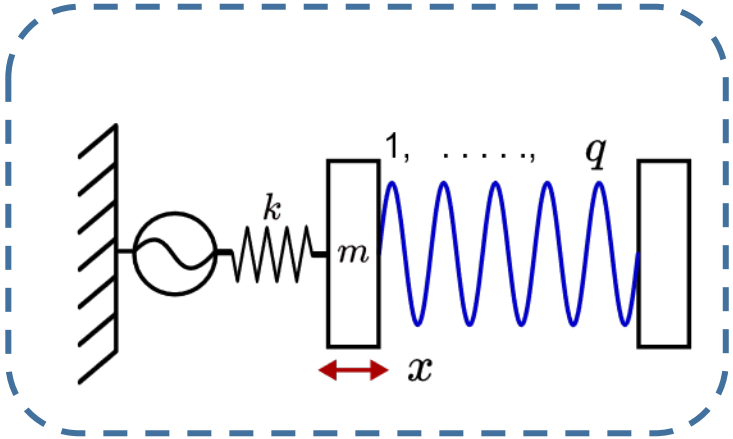

Axion detector with RQU:

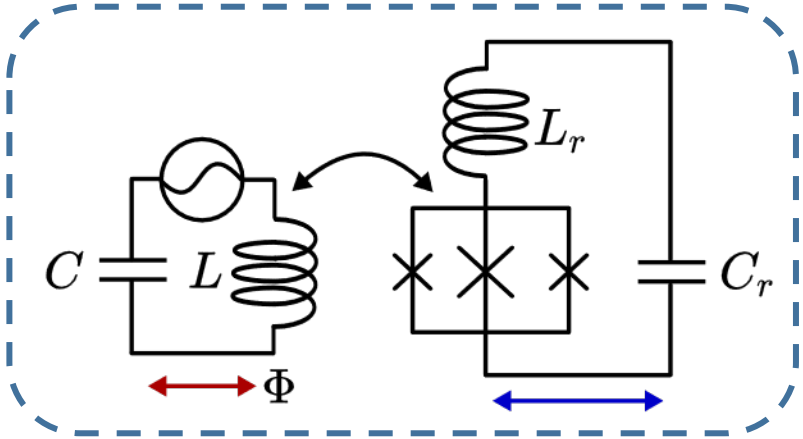

$$\omega_a = \sqrt{\frac{k}{m}} \qquad \omega_b = \frac{2\pi q c}{l(x)}$$

$$\omega_a = \sqrt{\frac{1}{LC}} \qquad \omega_b = \sqrt{\frac{1}{L_r(\Phi)C_r}}$$

Same Hamiltonian for both systems (to first order in coupling)

$$\hat{\mathrm{H}} = \hbar\omega_a\left(\hat{a}^\dagger\hat{a} + 1/2\right) + \hbar\omega_b\left(\hat{b}^\dagger\hat{b} + 1/2\right) + \hat{\mathrm{H}}_{\mathrm{INT}}$$

$$\hat{\mathrm{H}}_{\mathrm{INT}} = -\hbar\hat{F}\hat{b}^\dagger\hat{b}\left(\hat{a}^\dagger + \hat{a}\right)/\sqrt{2}$$

RF Quantum Upconverters

- Electromagnetic sub-μeV axion searches presently use dc SQUIDs in frequency range kHz – 100 MHz.
- The best dc SQUIDs in this frequency range, coupled to macroscopic resonant circuits, are 20 times worse than the SQL, and they couple loss to the resonant circuit.
- A dissipationless sensor is needed that can achieve SQL, and conduct phase-sensitive operations like backaction evasion with electromagnetic signals at audio-RF frequencies.

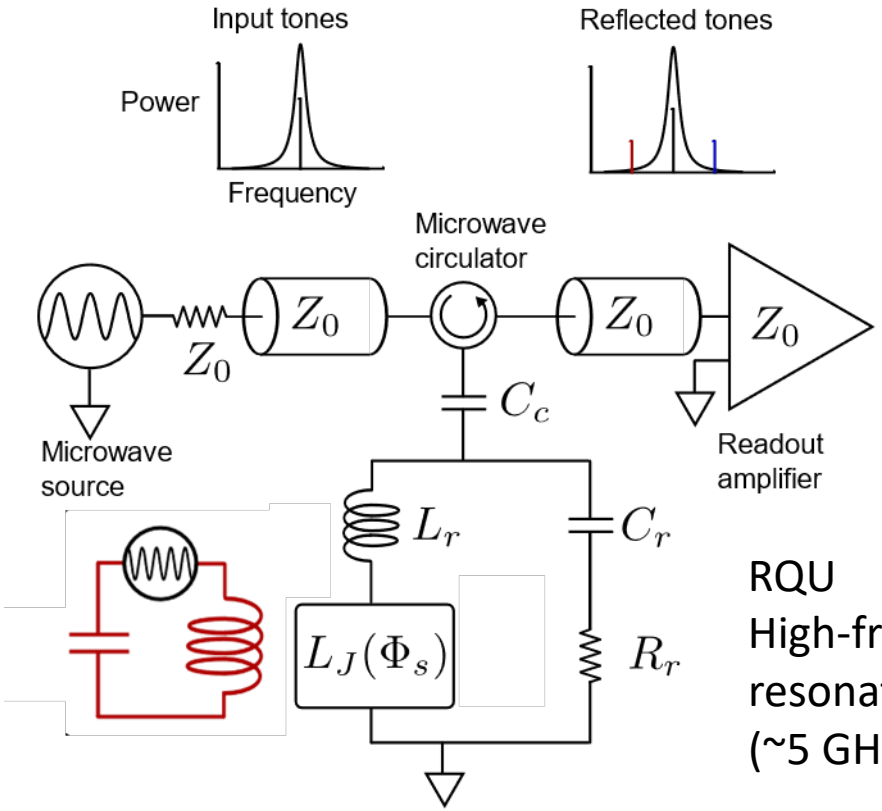

RQU
High-frequency resonator
(~5 GHz)

RF Quantum Upconverters

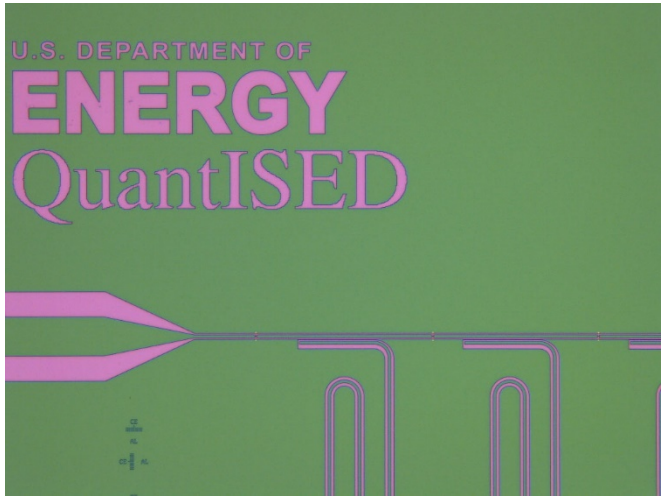

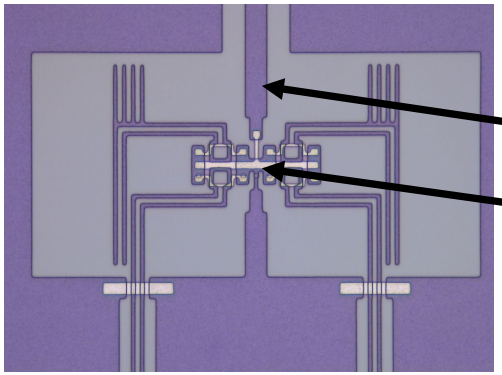

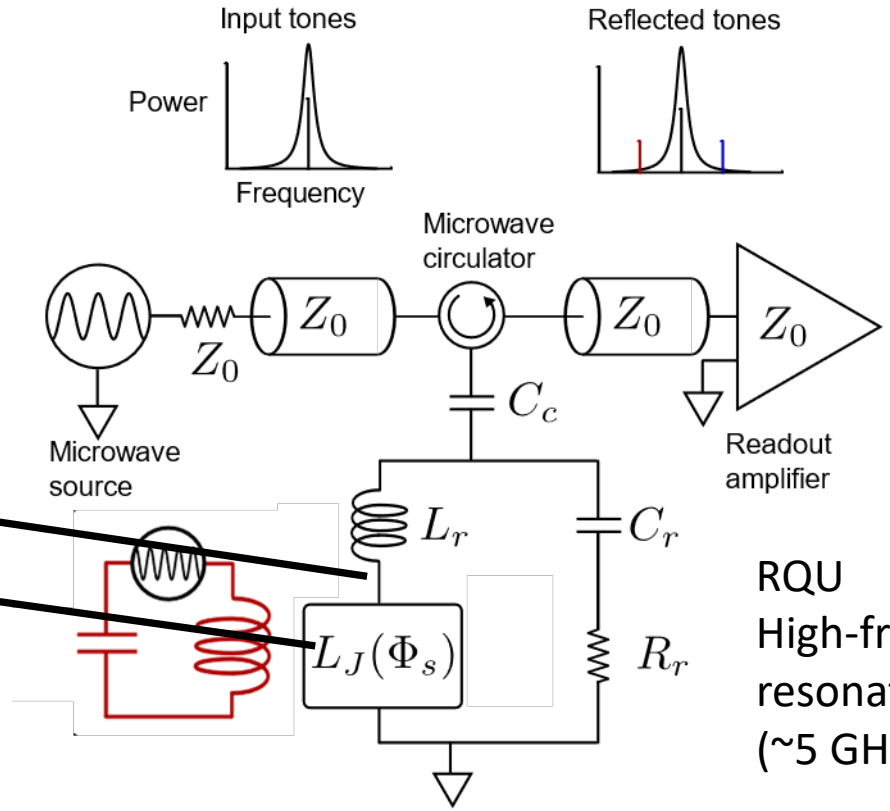

RQU
High-frequency resonator
(~5 GHz)

RQUs:
3-junction RQU 1-junction RQU

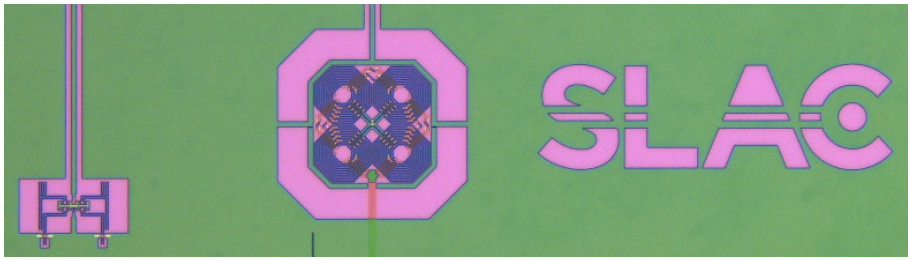

Cavity resonator RQUs:

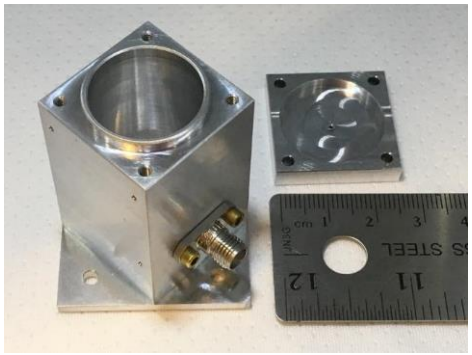

Data illustrating RF Upconversion

- Data illustrating upconversion in single-junction RQUs
- Single-junction RQU excited on resonance
- The signal information is upconverted to symmetric sidebands on the microwave carrier tone.

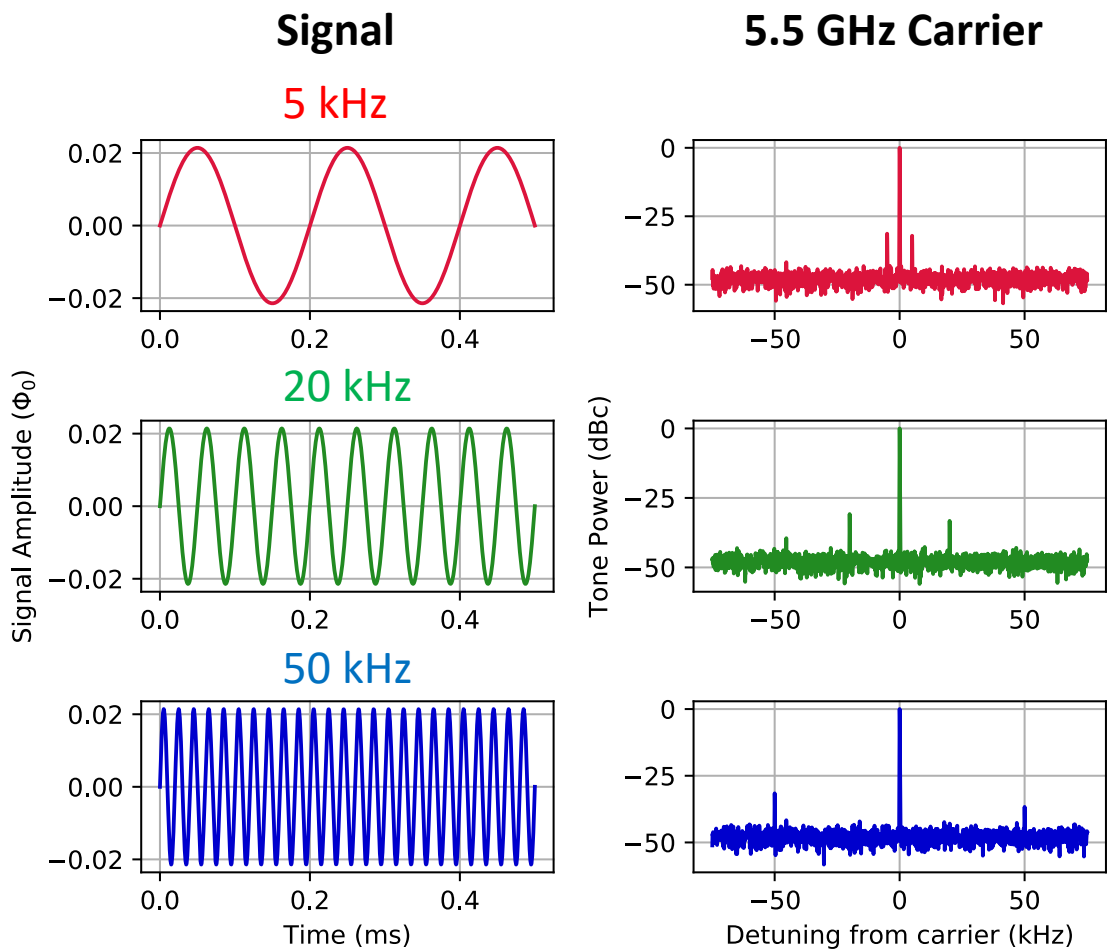

Phase-Sensitive Upconversion

If the carrier tone is amplitude modulated in phase with the X-quadrature of the input signal, phase-sensitive amplification of only the X-quadrature is achieved.

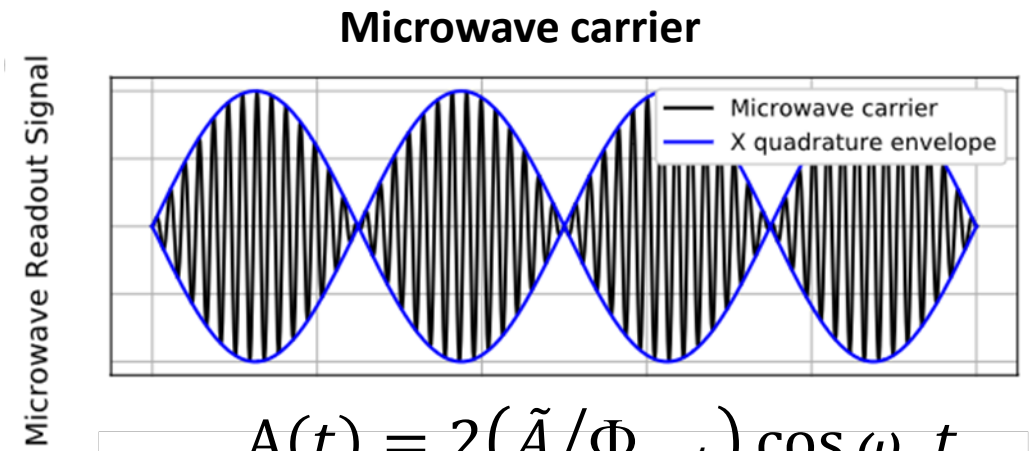

$$\mathrm{A}(t) = 2\left(\tilde{A}/\Phi_{zpt}\right)\cos\omega_a t$$

Clerk, *New Journ. Phys.* **10,** 095010 (2008).

$$\hat{\mathrm{H}} = \hbar\omega_a\left(\hat{a}^\dagger\hat{a} + 1/2\right) + \hbar\omega_b\left(\hat{b}^\dagger\hat{b} + 1/2\right) + \hat{\mathrm{H}}_{\mathrm{INT}}$$

$$\hat{\mathrm{H}}_{\mathrm{INT}} = -\hbar A\hat{F}\hat{\Phi} = -\sqrt{2}\hbar\tilde{A}\hat{F}\left[\hat{\mathrm{X}}(1 + \cos(2\omega_a t)) + \hat{\mathrm{Y}}\sin(2\omega_a t)\right]$$

If the carrier tone is amplitude modulated in phase with the X-quadrature of the input signal, phase-sensitive upconversion of only the X-quadrature is achieved.

Phase-Sensitive Upconversion Data

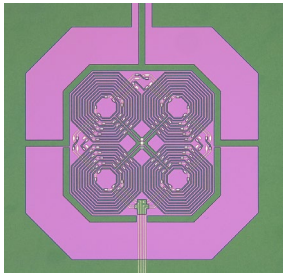

Single-junction RQU

Input: 50 kHz flux signal into single-junction RQU

Carrier: 5.5 GHz sinewave amplitude modulated at 50 KHz

Measure: output tone power as a function of phase shift between input sinewave and AM modulation

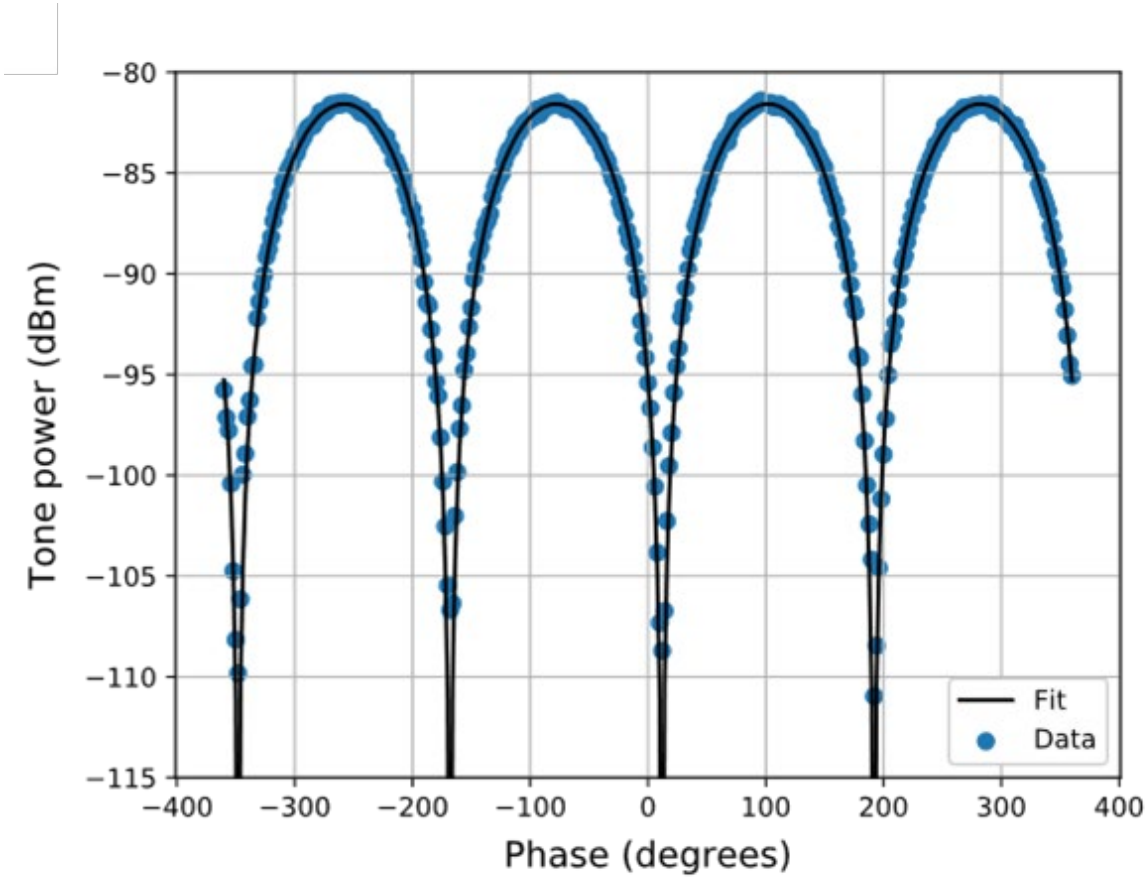

29.6 dB of phase-sensitive gain contrast

- Necessary step towards full backaction evasion

Conclusion: notional development timeline