Current measurement of low-intensity beams

Cryogenic Current Comparator with a SQUID

Miguel Fernandes (CERN)
Supervisors: Dr. Jocelyn Tan (CERN), Prof. Dr. Carsten Welsch (Univ. of Liverpool)

Low-intensity beam current monitoring

- Low-energy antiprotons ($\bar{p}$) experiments are complementary to those enabled by high-energy accelerators such as the LHC.
- Measuring the DC beam current of low intensity beams challenges the limits of traditional diagnostic devices (current DCCT's are limited to 1 μA.).
- We propose to develop a CCC/SQUID (Cryogenic Current Comparator with a Superconductor QUantum Interference Device), to be installed in the CERN low-energy $\bar{p}$ machines. Similar devices were developed in other institutes [1, 2].

Low-intensity $\bar{p}$ machines at CERN

- Currently, the low-energy $\bar{p}$ experiments at CERN are served by the Anti-proton Decelerator (AD) machine.
- A new storage ring, the Extra Low ENergy Antiproton (ELENA), is planned for 2016 and will permit further deceleration and beam cooling.

	AD		ELENA	
	Inj.	Extrac.	Inj.	Extrac.
Velocity [c]	0.97	0.11	0.11	0.01
Energy [MeV]	2750	5.32	5.32	0.10
Current [μA]	13.11	1.18	5.02	0.42
Aperture [mm]	175		60	

- To accurately measure the generated low-intensity beams, the CCC/SQUID current monitor should have a resolution $\leq 10\,nA$.
- It should be able to track the decrease in beam intensity during the decelaration phase, thus a bandwidth of less than 1 kHz should be sufficient.

System overview

- A CCC/SQUID acts like a beam transformer in the sense that the beam current is measured through the magnetic field created by the traveling particles.
- The azimuthal magnetic field component, which is proportional to the beam current is preserved, while others are suppressed.
- A SQUID, which is a very sensitive magnetometer, is used to measure the azimuthal component with values in fT to pT range.
- Appropriate readout electronics is required to linearize the SQUID response.

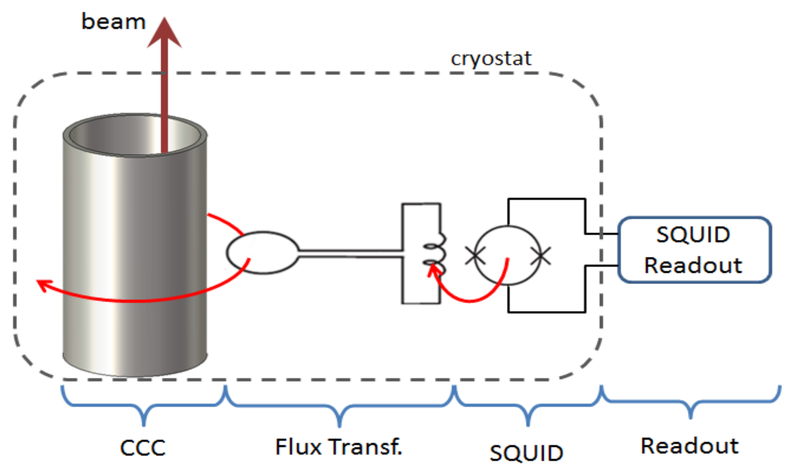

Project plan

Plans for next 12 months

- Study high- and low-temperature SC designs and decide on best solution.
- Visit institutes working on CCC/SQUID's and possibly form collaborations.
- Propose CCC geometry, magnetic coupling and shielding, SQUID devices.

Plans for next 24 months

- Develop and manufacture experimental setup to characterize CCC/SQUID's.
- Design acquisition chain: cabling, signal processing, controls.
- Prepare integration in AD and ELENA machines.

R&D topics

- CCC geometry and magnetic shielding structures (design compactness).
- Magnetic coupling to the SQUID (core materials, pickup and input coils, etc.).

References

[1] Vodel, W., Koch, H., Seidel, P., Bluthner, K. & Weber, P. *IEEE Trans. on Applied Superconductivity* **5**, 2152–2155 (1995).
[2] Watanabe, T., Watanabe, S. & Ikeda, T. *Proc. of EPAC* 1995–1997 (2002).
[3] Steppke, A. *et al. IEEE Trans. on Applied Superconductivity* **19**, 768–771 (2009).

Cryogenic Current Comparator (CCC) principle

- The main function of the CCC is to obtain a magnetic field distribution, in an area suitable to be measured by a magnetometer.
- The generated magnetic field is proportional to the passing beam current and at the same time independent of the beam trajectory, shape, and energy.
- An ideal infinite superconductor (SC) cylinder symmetrizes the magnetic field generated by the current passing inside because of the Meissner effect.

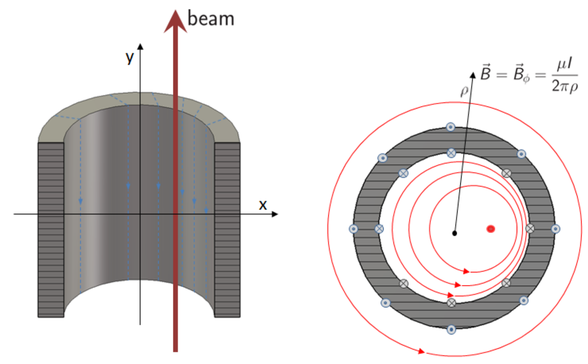

- Cylinder can be transformed into a "dual" toroidal shape, retaining the desired properties. In this case the magnetic field region is located inside the torus.
- A gap is needed in the torus ring, because otherwise the magnetic field would be completely shielded from the interior of the torus.

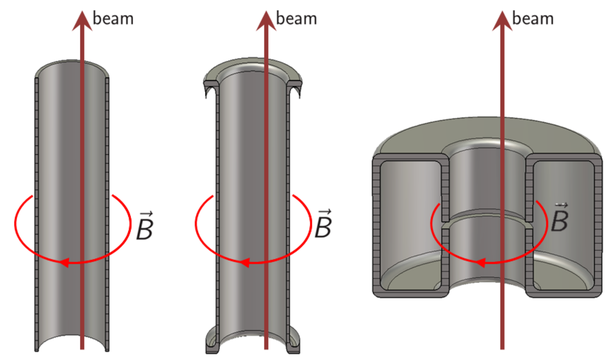

SQUID's as magnetometers

- SQUID's are very sensitive magnetometers based on SC loops containing Josephson junctions.

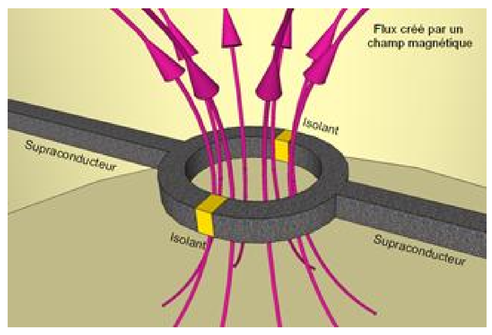

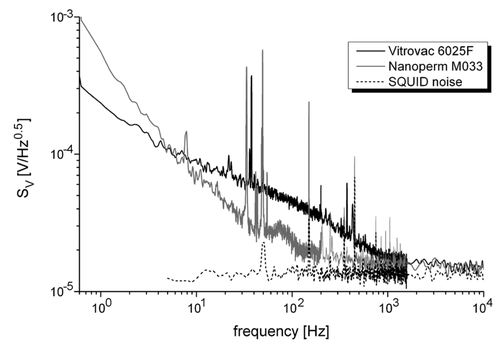

[3]

- Coupling of the magnetic field can be increased by using a high-permeability core for flux concentration.
- Since the generated magnetic field is very week (of the order of pT) appropriate shielding from external magnetic perturbations is needed.
- The three main factors determining the overall system resolution are:
  - Coupling of magnetic field to the SQUID detector
  - Intrinsic noise of the system (SQUID, core, coils)
  - Noise level from external sources

Superconductor materials and CCC geometry

Low-temperature superconductors

- Magnetic shielding integrated in the CCC geometry.
- Magnetic core inside CCC assures good coupling with the SQUID.
- Dominant noise in the system is introduce by the magnetic core, particularly at low-frequencies.

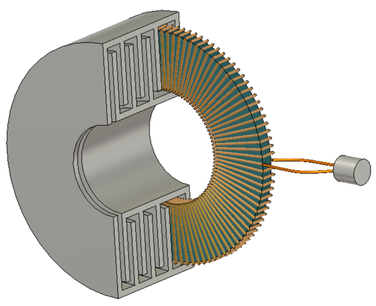

High-temperature superconductors

- Requires additional external shielding structure.
- Bridge shaped CCC outer surface for current concentration.
- Resolution is limited by the reduced magnetic field available to be coupled to the SQUID.

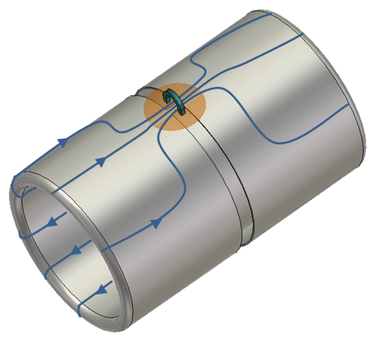

This project is funded by the European Union under contract PITN-GA-2011-289485